D.B. Gray Engineering Inc.

Stormwater Management - Grading & Drainage - Storm & Sanitary Sewers - Watermains

700 Long Point Circle
Ottawa, Ontario K1T 4E9

613-425-8044
d.gray@dbgrayengineering.com

SITE SERVICING & STORMWATER MANAGEMENT REPORT

6408 RENAUD ROAD
OTTAWA, ONTARIO

REPORT NO. 24109

NOVEMBER 16, 2026

CONTENTS

1.0 INTRODUCTION

2.0 WATER SERVICING

- 2.1 WATER SUPPLY FOR FIREFIGHTING
- 2.2 DOMESTIC WATER SUPPLY

3.0 SANITARY SERVICING

4.0 STORMWATER MANAGEMENT

- 4.1 QUANTITY CONTROL
- 4.2 QUALITY CONTROL
- 4.3 STORM SERVICING

5.0 CONCLUSIONS

LIST OF APPENDICES

A PRE-CONSULTATION: MEETING FEEDBACK

B WATER SERVICING

C SANITARY SERVICING

D STORMWATER MANAGEMENT

1.0 INTRODUCTION

This report has been prepared in support of the Site Plan Control application for the proposed 28-unit residential development located at 6408 Renaud Road in Ottawa, Ontario. The proposed development consists of a 4-unit dwelling (Building A), a 12-unit apartment building (Building B), and four vertically attached 3-unit dwellings. This report describes the servicing for the proposed buildings and stormwater management for the 1,315 m^2 property. The property is currently occupied by a single-family dwelling to be demolished. Refer to Pre-Consultation: Meeting Feedback in Appendix A.

This report forms part of the site servicing and stormwater management design for the proposed development. Also refer to Drawing No. C-1 to C-9 prepared by D.B. Gray Engineering Inc.

2.0 WATER SERVICING

2.1 WATER SUPPLY FOR FIREFIGHTING

There is an existing municipal Class AA fire hydrant located adjacent to the northeast corner of the subject property. It is approximately a 60 m unobstructed distance to the recessed entrance to Building C, which is less than the maximum 90 m required by the Ontario Building Code (OBC).

When calculating the required fire flow on private property in urban areas, the OBC method is to be used. Using the OBC method, the required fire flow is calculated to be 3,600 L/min (60 L/s). Refer to calculations in Appendix B.

The boundary conditions in the 300 mm Renaud Road municipal watermain provided by the City of Ottawa at the subject property indicate a hydraulic grade line (HGL) of 127.4 m for the 60 L/s fire flow. Refer to Appendix B. This HGL calculates to 389 kPa (56 psi). Since the pressure is above the OBC's minimum required pressure of 140 kPa (20 psi), there is an adequate water supply for firefighting from the existing municipal water distribution system.

The aggregate flow of all contributing fire hydrants within 150 m of the building shall not be less than the required fire flow. The existing municipal Class AA fire hydrant discussed above can contribute 5,700 L/min (95 L/s), which is greater than the required fire flow of 3,600 L/min (60 L/s).

2.2 DOMESTIC WATER SUPPLY

As per the City of Ottawa Water Design Guidelines for the consumption rate and peaking factors for an average apartment unit, the average daily demand for the 28-unit development is calculated to be 0.2 L/s, the maximum daily demand is calculated to be 1.4 L/s and the maximum hourly demand is calculated to be 2.1 L/s. Refer to calculations in Appendix B.

The boundary conditions in the 300 mm Renaud Road municipal watermain provided by the City of Ottawa at the subject property indicate a minimum HGL of 127.4 m and a maximum HGL of 130.6 m. Refer to Appendix B. Based on these boundary conditions, the pressure at the water meters is calculated to vary between 391 kPa (57 psi) and 425 kPa (62 psi). This is an acceptable range for the proposed development.

A 50 mm private watermain connecting to the existing 300 mm Renaud Road municipal watermain is proposed to service the development. 50 mm water services connecting to the proposed 50 mm private watermain are proposed to service the units.

3.0 SANITARY SERVICING

As per the City of Ottawa Sewer Design Guidelines for the flow rate and peaking factors for an average apartment unit, the post-development sanitary flow rate for the 28-unirt development is calculated to be 0.57 L/s.

150 mm sanitary sewer services at 2% slope (21.54 L/s capacity) are proposed to service the units. The proposed sanitary sewer services will connect to the proposed private sanitary sewer system.

A 200 mm private sanitary sewer at 0.65% slope (26.44 L/s capacity) is proposed to service the development. At the design flow rate, the 200 mm sanitary sewer will only be at 2% capacity. The proposed 200 mm sanitary sewer will connect to the existing 200 mm Renaud Road municipal sanitary sewer, which at 0.40% slope has a capacity of 20.74 L/s. Refer to calculations in Appendix C.

The pre-development sanitary flow rate is calculated to be 0.08 L/s. Refer to calculations in Appendix C. The 0.49 L/s post-development increase in flow is expected to have an acceptable impact on the 200 mm Renaud Road municipal sanitary sewer.

4.0 STORMWATER MANAGEMENT

4.1 QUANTITY CONTROL

The stormwater quantity control criteria are to control the post-development 100-year peak flow rate to the pre-development 5-year peak flow rate using a calculated pre-development runoff coefficient not more than 0.5 and a calculated pre-development time of concentration not less than 10 minutes. It is calculated that the pre-development conditions reflect a 5-year runoff coefficient of 0.39. The 5-year runoff coefficients are increased by 25% to a maximum of 1.00 to calculate the 100-year runoff coefficient. It is calculated that the pre-development conditions reflect a 100-year runoff coefficient of 0.47. Using the Rational Method with a time of concentration of 10 minutes, the pre-development flow rates are calculated to be 30.65 L/s during the 100-year event and 14.84 L/s during the 5-year event. The Rational and Modified Rational Methods are used to calculate the post-development flow rates and corresponding storage volumes. Refer to calculations in Appendix D.

Drainage Area I (Uncontrolled Flow Off Site – 225 m^2):
Generally, the perimeter of the property will drain uncontrolled off site. The flow rates are calculated at a time of concentration of 10 minutes.

	100-Year Event	5-Year Event
Maximum Flow Rate	5.27 L/s	2.61 L/s

Drainage Area II (1,040 m^2):
An inlet control device (ICD) located in the outlet pipe of CB/MH-1 will restrict the flow of stormwater and cause stormwater rise in the upstream infrastructure and pond above CB/MH-1. The ICD will be a vortex style manufactured by Veolia, or approved equivalent, and sized by the manufacturer for a release rate of 9.56 L/s at 3.19 m. It is determined that a 75 VHV-1 will restrict the maximum flow rate to 9.56 L/s at 3.19 m, and it is calculated that an orifice area of 4,418 mm^2 (75 mm dia.) with a discharge coefficient of 0.274 will achieve the release rate of 9.56 L/s at 3.19 m. Based on this orifice the maximum release rate for the 5-year storm event is calculated to be 6.71 L/s at 1.57 m. Since some of the restricted stormwater is proposed to be stored using underground infrastructure, an average release rate equal to 50% of the maximum release rate is used to calculate the required storage volumes. The underground infrastructure will include 4 – Soleno HydroStor HS290 chambers or approved equivalent surrounded by clear stone wrapped in a thermoplastic waterproof liner.

	100-Year Event	5-Year Event
Maximum Release Rate	9.56 L/s	6.71 L/s
Maximum Water Elevation	87.88 m	86.26 m
Maximum Volume Stored	38.93 m^3	18.41 m^3

Entire Site (Drainage Areas I + II):

	100-Year Event	5-Year Event
Pre-Development Flow Rate	30.65 L/s	14.84 L/s
Maximum Allowable Release Rate	14.84 L/s	14.84 L/s
Maximum Release Rate	14.84 L/s	9.31 L/s
Maximum Volume Required	38.93 m^3	18.41 m^3
Maximum Volume Stored	38.93 m^3	18.41 m^3

The maximum post-development release rate during the 100-year event is calculated to be 14.84 L/s, which is 52% less than the pre-development flow rate and equal to the maximum allowable release rate. To achieve the maximum allowable release rate, a maximum storage volume of 38.93 m^3 is required and provided. The maximum post-development release rate during the 5-year event is calculated to be 9.31 L/s, 37% less than the pre-development flow rate and maximum allowable release rate. The post-development reduction in flow is expected to have a positive impact on the 1,500 mm Renaud Road municipal storm sewer.

4.2 QUALITY CONTROL

The stormwater quality control criterion is to provide an enhanced (80% TSS removal) level of protection. An oil grit separator manhole (OGS MH-3) is proposed to be located downstream of the ICD. Calculations by the manufacturer indicate that the CDS2015-4 OGS will remove 95% of total suspended solids. Refer to Appendix D.

An Erosion & Sediment Control Plan has been developed to be implemented during construction. Refer to drawing C-5 and notes on drawing C-6.

i. Sediment capture filter sock inserts are to be installed in all existing and proposed catch-basins and catch-basin/manholes adjacent to and within the site.
ii. A silt fence barrier is to be installed along the perimeter of the site.
iii. Any material deposited on the public road is to be removed.

4.3 STORM SERVICING

The peak unrestricted flow rate draining into the last sewer segment of the private storm sewer system during the 5-year event is calculated to be 25.38 L/s. A 250 mm storm sewer at 0.432% slope (39.09 L/s capacity) is proposed to connect to the existing 1,500 mm Renaud Road municipal storm sewer, which at 0.12% slope has a capacity of 2,559 L/s. At the peak unrestricted 5-year flow rate the proposed 250 mm storm sewer will be at 65% capacity. Refer to calculations in Appendix D.

5.0 CONCLUSIONS

1. There is an adequate water supply for firefighting from the existing municipal water distribution system.
2. The existing municipal Class AA fire hydrant can contribute 5,700 L/min (95 L/s), which is greater than the required fire flow of 3,600 L/min (60 L/s).
3. There is an acceptable range of water pressures in the existing municipal water distribution system.
4. The post-development sanitary flow rates will be adequately handled by the proposed sanitary sewer services and private sanitary sewer system.
5. The post-development increase in sanitary flow is expected to have an acceptable impact on the existing municipal sanitary sewer.
6. The maximum post-development release rate during the 100-year event will be equal to the maximum allowable release rate.
7. The post-development reduction in stormwater flow is expected to have a positive impact on the existing municipal storm sewer.
8. The proposed OGS will provide an enhanced (80% TSS removal) level of protection.
9. An Erosion & Sediment Control Plan has been developed to be implemented during construction.
10. The peak unrestricted flow rates during the 5-year event will be adequately handled by the proposed private storm sewer system.

Prepared by D.B. Gray Engineering Inc.



APPENDIX A

PRE-CONSULTATION: MEETING FEEDBACK

File No.: PC2024-0401

October 23, 2024

Nick Sutherland
Arcadis Professional Services (Canada) Inc.
Via email: nick.sutherland@arcadis.com

Subject: Pre-Consultation: Meeting Feedback
Proposed Site Plan Control and Zoning By-law Amendment
Application – 6408 Renaud Road

Please find below information regarding next steps as well as consolidated comments from the above-noted pre-consultation meeting held on Enter Date of Meeting.

Pre-Consultation Preliminary Assessment

1 ☐	**2** ☐	**3** ☐	**4** ☐	**5** ☐

One (1) indicates that considerable major revisions are required while five (5) suggests that the proposal appears to meet the City's key land use policies and guidelines. This assessment is purely advisory and does not consider technical aspects of the proposal or in any way guarantee application approval.

Next Steps

1. A review of the proposal and materials submitted for the above-noted pre-consultation has been undertaken. Please proceed to complete a Phase 2 / Phase 3 Pre-consultation Application Form and submit it together with the necessary studies and/or plans to planningcirculations@ottawa.ca.

2. In your subsequent pre-consultation submission, please ensure that all comments or issues detailed herein are addressed. A detailed cover letter stating how each issue has been addressed must be included with the submission materials. Please coordinate the numbering of your responses within the cover letter with the comment number(s) herein.

3. Please note, if your development proposal changes significantly in scope, design, or density before the Phase 3 pre-consultation, you may be required to complete or repeat the Phase 2 pre-consultation process.

Supporting Information and Material Requirements

1. The attached **Study and Plan Identification List** outlines the information and material that has been identified, during this phase of pre-consultation, as either required (R) or advised (A) as part of a future complete application submission.

a. The required plans and studies must meet the City's Terms of Reference (ToR) and/or Guidelines, as available on Ottawa.ca. These ToR and Guidelines outline the specific requirements that must be met for each plan or study to be deemed adequate.

Consultation with Technical Agencies

1. You are encouraged to consult with technical agencies early in the development process and throughout the development of your project concept. A list of technical agencies and their contact information is enclosed.

Planning

Comments:

1. The property is designated as Neighbourhood as per Schedule 8 of the Official.

2. Policy 10.1.7 will require an Impact Assessment and a notice on title that there is an operating landfill within 3 kms of the site.

3. Schedule C16 lists Renaud Road as an urban collector with a 24m protected right-of-way. A widening will be needed. The widening will need to shown on the Site Plan as a measurement of 12m from the center of the travel road(asphalt).

4. Policy 4.7.2 (2) and (3) of the OP, development in the Public Service Area is based on availability of both public water and wastewater services. The parcel is not currently serviced by municipal wastewater infrastructure. The City is not obligated to provide a service connection to a lot in the Public Service Area. If a Zoning By-law Amendment is approved, a hold will be placed on the zone to prohibit development within the zone until municipal wastewater infrastructure is extended to the site, at the expense of the applicant.

5. Despite the fact that there is no maximum density, the proposal is very density. It will be hard to provide this number of units along with amenity areas, parking spaces, garbage collection areas and still meet the City's tree canopy goals for future development.

6. The Zoning will need to be worked out in conjunction with the site plan. The R3Z zone would be a good starting point. We can discuss site-specific provisions and have them approved, if necessary.

7. Please confirm that each unit will be rental. If you wish to convey any of the primary buildings you will be a need to apply for a Standard Condominium.

8. Parking requirements - The property is in Area C of Schedule 1A to the Zoning By-law. Although the development meets the minimum parking requirements per Section 101 of the Zoning By-law, and although parking is not required for additional dwelling units, the area is not serviced by high-frequency bus service

and is still a largely car-oriented neighbourhood with minimal on-street parking and no off-street parking options during overnight parking ban season. Policy 5.4 of the OP encourages development in the Suburban transect that supports a gradual evolution toward 15-minute neighbourhoods. Until more frequent public transit is established in the area, staff do not support development that cannot reasonably meet the needs of its occupants.

9. Access to the site will need to be gained from either Ashcroft lands to the west, 6412 Renaud Road to the east or directly from Renaud Road. Staff will need to have written confirmation from the neighbouring property if the access is over a neighbouring property. Easement(s) will be required prior to registration of the site plan agreement.

10. I was intrigued about the idea of flexible units. You indicated that there will be 2 bedroom plus den units on the top floor and that the ground and basement units could be co-tenancy units. I am concerned that family-oriented units are needed more and that the floor plates will not be as flexible as you suggest. Can the second and third floor be a single-family unit (1200 sq.ft.)?

Urban Design

Comments:

Submission Requirements

11. An Urban Design Brief is required. Please see attached customized Terms of Reference to guide the preparation of the submission.

    a. The Urban Design Brief should be structured by generally following the headings highlighted under **Section 3 – Contents of these Terms of Reference**.

12. Additional drawings and studies are required as shown on the SPIL. Please follow the terms of reference (Planning application submission information and materials | City of Ottawa) to prepare these drawings and studies. These include:

    a. Landscape plan.

    b. Elevations.

Comments on Preliminary Design

13. The following element of the preliminary design are of concern:

    a. Please indicate what the use of the lands to the west will be. Ashcroft discussions?

    b. How do units address the public right-of-way?

c. How do the units relate to surrounding context, existing and new?

d. Signs of overdevelopment: unit/building size, reduction of parking, lack of suitable amenity, lack of garbage storage, lack of bike storage/parking, landscaping, space for trees etc.

Recommendations

14. We recommend making a determination of how the lands to the west are going to be used, i.e. will it be development or not. In the interim, as it is under private ownership, we should consider that it will be development and this application should design within that context.

Engineering

Comments:

Water

15. Watermain looping is recommended for 50 or more dwellings to avoid creating a vulnerable service area. District Metering Area (DMA) Chamber(s) are required for private developments serviced by a connection 150 mm or larger or when there are two or more private connections to the public watermain. Refer to the City of Ottawa Water Distribution Guidelines.

16. Please be advised that capacity of the existing system will be determined after Water Boundary conditions are requested. Water Boundary condition requests must be submitted to the City Project Manager, Development Review by the civil design engineer or consultant prior to submission and include the following information:

    i. Location(s) of water service and connections (provide a map);

    ii. Type of development and the amount of fire flow required (per Fire Underwriter Surveys);

    iii. Average daily demand: ___ l/s;

    iv. Maximum daily demand: ___l/s;

    v. Maximum hourly daily demand: ___ l/s;

    vi. Required fire flow and completed FUS Design Declaration if applicable;

vii. Supporting Calculations for all demands listed above and required fire flow as per Ontario Building Code or Fire Underwriter Surveys (See technical Bulletin ISTB-2021-03;

viii. Watermain system analysis demonstrating adequate pressure as per section 4.2.2 of the Water Distribution Guidelines;

17. Demonstrate adequate hydrant coverage for fire protection. Please review Technical Bulletin ISTB-2018-02, Appendix I Table 1 – maximum flow to be considered from a given hydrant;

18. If required, show proposed emergency route (to be satisfactory to Fire Services).

19. Perimeter metering may be required. Water metering department will be circulated the concept plan for an opportunity to provide preliminary feedback on metering requirements.

Sanitary Sewers

20. There is no existing public sanitary sewer service to the subject site, a sewer extension will be required to connect the future development to sanitary services. A holding provision for the zoning application of this site will be implemented until the future development has access to a public sanitary sewer.

21. The lands to the south at 6412 Renaud Road proposed for redevelopment and also require an extension of the sanitary sewer on Renaud Road. It is recommended to contact them and coordinate servicing requirements to ensure all future development needs can be met.

22. A monitoring maintenance hole may be required just inside the property line. See the sewer use by-law for details.

23. Provide an analysis to demonstrate that there is adequate residual capacity in the receiving and downstream wastewater system to accommodate the proposed development.

24. Please apply the wastewater design flow parameters in Technical Bulletin PIEDTB-2018-01.

25. A maintenance hole is required to be installed over the public sewer where private sewer connection to the public sewer exceeds 50% of the public sewer diameter. If a maintenance hole is proposed to be installed over existing City infrastructure, clearly indicate on the design drawings the applicable Standard City Drawing. For example, S12.1 or doghouse structure / S12.2, etc.

Stormwater Management

26. A monitoring maintenance hole may be required just inside the property line. See the sewer use by-law for details.
27. A maintenance hole is required to be installed over the public sewer where private sewer connection to the public sewer exceeds 50% of the public sewer diameter.
28. If a maintenance hole is proposed to be installed over existing City infrastructure, clearly indicate on the design drawings the applicable Standard City Drawing. For example, S12.1 or doghouse structure / S12.2, etc.

Stormwater Quality:

29. Characterize the water quality to be protected and Stormwater Contaminants (e.g., suspended solids, nutrients, bacteria, water temperature) for potential impact on the Natural Environment, and control as necessary; OR As per the MSS, watershed/subwatershed plan, similar area-wide Stormwater study, or Stormwater management plan to minimize, or where possible, prevent increases in Contaminant loads and impacts to receiving waters.
30. Provide Enhanced level of protection (80%) for suspended solids removal.
31. OGS unit sizing shall be as per ISO 14034 Environmental Technology Verification (ETV)

Stormwater Quantity:

32. The Stormwater Management Criteria for the subject site is to be based on the following:
    i. The 5-year storm event using the IDF information derived from the Meteorological Services of Canada rainfall data, taken from the MacDonald Cartier Airport, collected 1966 to 1997;
    ii. The pre-development runoff coefficient or a maximum equivalent 'C' of 0.5, whichever is less (§ 8.3.7.3);
    iii. A calculated time of concentration (cannot be less than 10 minutes);Flows to the storm sewer in excess of the 5-year storm release rate, up to and including the 100-year storm event, must be detained on site;
    iv. Permissible ponding of 350mm for 100-year. No spilling to adjacent sites;

v. At 100-year ponding elevation you must spill to the ROW;

vi. 100-year Spill elevation must be 300mm lower than any building opening or ramp;

Geotechnical and Slope Stability

33. Sensitive Marine Clay (SMC) is widely found across Ottawa- geotechnical reports should include Atterberg Limits, consolidation testing, sensitivity values, and vane shear test. Refer to City of Ottawa Geotechnical and Slope Stability Guidelines.

Additional Engineering Notes

34. Any future road widening setbacks, existing easements or proposed easements should be shown on all plans. Proposed infrastructure shall not be located within setbacks.

35. For any proposed exterior light fixtures, please provide certification from a licensed professional engineer confirming lighting has been designed only using fixtures that meet the criteria for full cut-off classification as recognized by the Illuminating Engineering Society of North America and result in minimal light spillage onto adjacent properties (maximum allowable spillage is 0.5 fc).

36. An MECP Environmental Compliance Approval (Municipal/Private Sewage Works) is likely required for the proposed development. Please contact the Ministry of the Environment, Conservation and Parks, Ottawa District Office, to arrange a pre-submission consultation:

    a. Charlie Primeau at (613) 521-3450, ext. 251 or Charlie.Primeau@ontario.ca

    b. Emily Diamond at (613) 521-3450, ext. 238 or Emily.Diamond@ontario.ca

37. Plans are to be submitted on standard A1 size (594mm x 841mm) sheets, utilizing an appropriate Metric scale (1:200, 1:250, 1:300, 1:400, or 1:500).

Please contact Kelsey Charie, Infrastructure Project Manager, for questions regarding engineering.

Noise

Comments:

38. A Noise Impact Study will be required due to proximity to Renaud and Fern Casey (both collector roads)

Feel free to contact Reed Adams, Transportation Project Manager, for follow-up questions.

Transportation

- Access onto Fern Casey extension:
    - Permission from Ashcroft will be necessary to construct an access onto the Fern Casey extension.
    - The timing of the extension will also determine whether the site can construct an access to it.
    - Access through neighbouring access to the east would be the preferred option.
- Parking:
    - Ensure that turning movements at accesses and garbage locations can accommodate all vehicles that would use the site.
- A TIA is not required.
- ROW Protection:
    - Ensure that the development proposal complies with the Right-of-Way protection requirements of the Official Plan's Schedule C16.
    - Any requests for exceptions to ROW protection requirements must be discussed with Transportation Planning and concurrence provided by Transportation Planning management.
    - ROW must be unincumbered and conveyed at no cost to the City. Note that conveyance of the ROW will be required prior to registration of the SP agreement. Additional information on the conveyance process can be provided upon request.
- Clear throat requirements for a residential development that has a total of 24 units on a collector road is **8m**. Ensure this length is provided. The clear throat length is measured from the ends of the driveway curb return radii at the roadway and the point of first conflict on-site. Note the minimum throat length provided must be maintained with the future ROW protection (as applicable).
- Corner clearances should follow minimum distances set out within TAC Figure 8.8.2.
    - Corner clearances must consider the future condition of a signalized intersection at Fern Casey and Renaud

- Nearby development charge (DC) intersections include:
    - Renaud and Fern Casey
- As the site proposed is residential, AODA legislation applies for all areas accessible to the public (i.e. outdoor pathways, parking, etc.).
- On the site plan:
    - Ensure site access meets the City's Private Approach Bylaw.
    - Show all details of the roads abutting the site; include such items as pavement markings, accesses and/or sidewalks.
    - Turning movement diagrams required for all accesses showing the largest vehicle to access/egress the site.
    - Turning movement diagrams required for internal movements (garbage).
    - Show all curb radii measurements; ensure that all curb radii are reduced as much as possible.
    - Show dimensions for site elements (i.e. lane/aisle widths, access width and throat length, parking stalls, sidewalks, pedestrian pathways, etc.)
    - Parking stalls at the end of dead-end parking aisles require adequate turning around space.
    - Show the corner clearance for the proposed entrance

Feel free to contact Reed Adams, Transportation Project Manager, for follow-up questions.

Forestry

Comments:

39. A Tree Conservation Report and Landscape Plan are submission requirements.
40. Appropriate zoning provisions will be necessary for this site if sensitive marine clay soils are present. Enough space and adequate soil volume must be provided for trees. The Community Design Plan (Section 3.4) for this area has tree planting requirements. A summary of some of the main points are:
    a. 1 tree for every single detached or semi-detached unit, 1 tree for every two townhouses and 1 tree for every four stacked townhouses or apartment units

b. Given the soils conditions, minimum rights-of-way of 18 metres and minimum residential lot depths of 30m are likely the minimum necessary to ensure tree planting in front yards.

c. Tree planting can occur in the front or rear of units and in communal amenity space. The planting must conform to the City"s planting policies for marine clay soils.

41. Please have the Geotechnical Consultant give direction on what tree planting setbacks apply if the trees are separated from building foundations by a parking lot.

42. The applicant mentioned using the Miyawaki method of intensified tree planting. Planting in the right of way must follow City requirements, included in the bullets to follow. One of the main factors determining suitability of this method for a property is whether active maintenance can be provided. The SMC soils are another factor to consider. The Official Plan policies must be adhered to including contributing to a 40% canopy cover target. Please provide details on how these items will be addressed if you choose to trial this method on a small portion of the property.

43. Tree Conservation Report requirements. The following Tree Conservation Report (TCR) requirements have been adapted from the Schedule E of the Urban Tree Protection Guidelines – for more information on these requirements please contact hayley.murray@ottawa.ca

44. A Tree Conservation Report (TCR) must be supplied for review along with the suite of other plans/reports required by the City

- Any tree 10 cm in diameter or greater and City-owned trees of any diameter requires a tree permit issued under the Tree Protection Bylaw (Bylaw 2020 – 340); the permit will be based on an approved TCR and made available at or near plan approval.

- The TCR must contain 2 separate plans/maps:

- Plan/Map 1 - show existing conditions with tree cover information.

- Plan/Map 2 - show proposed development with tree cover information.

- The TCR must list all trees on site, as well as off-site trees if the CRZ (critical root zone) extends into the developed area, by species, diameter, and health condition. Please note that averages can be used if there are forested areas.

- Please identify trees by ownership – private onsite, private on adjoining site, city owned, co-owned (trees on a property line)

- If trees are to be removed, the TCR must clearly show where they are, and document the reason they cannot be retained.

- The removal of trees on a property line will require the permission of both property owners.

- All retained trees must be shown, and all retained trees within the area impacted by the development process must be protected as per City guidelines available at Tree Protection Specification or by searching Ottawa.ca

- The city encourages the retention of healthy trees; if possible, please seek opportunities for retention of trees that will contribute to the design/function of the site.

- Removal of a City tree is not permitted unless justified. If justified, monetary compensation for the value of the tree must be paid before a tree removal permit is issued.

45. Landscape Plan (LP) requirements.

- Landscape Plan Terms of Reference must be adhered to for all tree planting: Click Here. For more information on these requirements please contact hayley.murray@ottawa.ca

46. Additional Elements for Tree Planting in the Right of Way:

- Please ensure any retained trees are shown on the LP

- Sensitive Marine Clay - Please follow the City's 2017 Tree Planting in Sensitive Marine Clay guidelines.

- Soil Volume - Please demonstrate as per the Landscape Plan Terms of Reference that the available soil volumes for new plantings will meet or exceed the minimum soil volumes requested.

- The city requests that consideration be given to planting native species wherever there is a high probability of survival to maturity.

- Efforts shall be made to provide as much future canopy cover as possible at a site level, through tree planting and tree retention. The Landscape Plan shall show/document that the proposed tree planting and retention will contribute to the City's overall canopy cover over time. Please provide a projection of the future canopy cover for the site to 40 years

- Minimum Setbacks

    a. Maintain 1.5m from sidewalk or MUP/cycle track or water service laterals.

b. Maintain 2.5m from curb

c. Coniferous species require a minimum 4.5m setback from curb, sidewalk, or MUP/cycle track/pathway.

d. Maintain 7.5m between large growing trees, and 4m between small growing trees. Park or open space planting should consider 10m spacing, except where otherwise approved in naturalization / afforestation areas.

e. Adhere to Ottawa Hydro's planting guidelines (species and setbacks) when planting around overhead primary conductors.

- Tree specifications

a. Minimum stock size: 50mm tree caliper for deciduous, 200cm height for coniferous.

b. Maximize the use of large deciduous species wherever possible to maximize future canopy coverage.

c. Tree planting on city property shall be in accordance with the City of Ottawa's Tree Planting Specification; and if possible, include watering and warranty as described in the specification.

d. No root barriers, dead-man anchor systems, or planters are permitted.

e. No tree stakes unless necessary (and only 1 on the prevailing winds side of the tree)

Feel free to contact Hayley Murray, Planning Forester, for follow-up questions.

Parkland

Comments:

47. Cash-in-lieu of parkland / parkland dedication

48. Cash-in-lieu of parkland / parkland dedication will be based on the Parkland Dedication By-law No. 2022-280

Feel free to contact Jessica Button, Parks Planner, for follow-up questions.

Other

49. The High Performance Development Standard (HPDS) is a collection of voluntary and required standards that raise the performance of new building projects to achieve sustainable and resilient design and will be applicable to Site Plan Control and Plan of Subdivision applications.

a. The HPDS was passed by Council on April 13, 2022, but is not in effect at this time, as Council has referred the 2023 HPDS Update Report back to staff with the direction to bring forward an updated report to Committee at a later date. The timing of an updated report to Committee is unknown at this time, and updates will be shared when they are available.

b. Please refer to the HPDS information at ottawa.ca/HPDS for more information.

50. Under the Affordable Housing Community Improvement Plan, a Tax Increment Equivalent Grant (TIEG) program was created to incentivize the development of affordable rental units. It provides a yearly fixed grant for 20 years. The grant helps offset the revenue loss housing providers experience when incorporating affordable units in their developments.

    a. To be eligible for the TIEG program you must meet the following criteria:

        i. the greater of five units OR 15 per cent of the total number of units within the development must be made affordable

        ii. provide a minimum of 15 per cent of each unit type in the development as affordable

        iii. enter into an agreement with the city to ensure the units maintain affordable for a minimum period of 20 years at or below the city-wide average market rent for the entire housing stock based on building form and unit type, as defined by the Canada Mortgage and Housing Corporation

        iv. must apply after a formal Site Plan Control submission, or Building Permit submission for projects not requiring Site Plan Control, and prior to Occupancy Permit issuance

    b. Please refer to the TIEG information *at Affordable housing community improvement plan / Plan d'améliorations communautaires pour le logement abordable for more details or contact the TIEG coordinator via email at affordablehousingcip@ottawa.ca.*

Submission Requirements and Fees

1. Prior to development, the site will need to be rezoned to the appropriate zone and you will need to obtain approval of a Site Plan Control -Complex application.
    a. Additional information regarding fees related to planning applications can be found here.
2. The attached **Study and Plan Identification List** outlines the information and material that has been identified as either required (R) or advised (A) as part of a future complete application submission.

a. The required plans and studies must meet the City's Terms of Reference (ToR) and/or Guidelines, as available on Ottawa.ca. These ToR and Guidelines outline the specific requirements that must be met for each plan or study to be deemed adequate.

3. All of the above comments or issues should be addressed to ensure the effectiveness of the application submission review.

Should there be any questions, please do not hesitate to contact myself or the contact identified for the above areas / disciplines.

Yours Truly,
Steve Belan

c.c. Katie Turk, Planner III
Steve Belan, Planner II
Christopher Moise, Planner II, Urban Design
Derek Unrau, Infrastructure Project Manager
Hayley Murray, Forester
Kelsey Charie, Infrastructure Project Manager
Reed Adams, Transportation Project Manager
Rochelle Fortier, Infrastructure Project Manager
Jessica Button, Parks

APPENDIX B

WATER SERVICING

D.B. Gray Engineering Inc.

Stormwater Management - Grading & Drainage - Storm & Sanitary Sewers - Watermains

700 Long Point Circle
Ottawa, Ontario K1T 4E9

613-425-8044
d.gray@dbgrayengineering.com

November 2, 2026

6408 Renaud Road

Building C

Ottawa, Ontario

FIRE FLOW CALCULATIONS

OBC Method

Q = Required water supply in litres
= KVS_{Total}

K = Water supply coefficient as per OBC A-3.2.5.7. Table 1
= 23 Group C Occupancy, Building is of combustible construction with fire separations without fire resistance ratings.

V = Building volume in cubic meters

	Floor Area (sq.m)	Height (m)	Volume (cu.m)
3rd Floor:	240	3	720
2nd Floor:	240	3	720
1st Floor:	240	3	720
Basement:	240	3	720
			2,880

S_{Total} = Total of spatial coefficients from exposure distances

= 1.0 + $S_{Side\ 1}$ + $S_{Side\ 2}$ + $S_{Side\ 3}$ + $S_{Side\ 4}$

	Spatial Coefficient	Exposure Distance (m)	
$S_{Side\ 1}$	0.5	1.2	(midpoint to Building B)
$S_{Side\ 2}$	0.0	11.5	(to east property line)
$S_{Side\ 3}$	0.5	1.5	(to south property line)
$S_{Side\ 4}$	0.5	1.5	(to west property line)
S_{Total}	2.5		Need not exceed 2.0

Q = 132,480 L

= 3,600 L/min as per OBC A-3.2.5.7. Table 2

= 60 L/s

---

60 L/s Fire Flow HGL: 127.4 m

Elevation at Fire Hydrant: 87.7 m

Static Pressure at Fire Hydrant: 39.7 m 389 kPa 56 psi

D.B. Gray Engineering Inc.

Stormwater Management - Grading & Drainage - Storm & Sanitary Sewers - Watermains

700 Long Point Circle
Ottawa, Ontario K1T 4E9

613-425-8044
d.gray@dbgrayengineering.com

November 2, 2026

6408 Renaud Road

Residential Development

Ottawa, Ontario

WATER DEMAND CALCULATIONS

	Number of Units	Persons per Unit	Population
1 Bedroom:	0	1.4	0
2 Bedroom:	0	2.1	0
3 Bedroom:	0	3.1	0
Average:	28	1.8	50.4
Total:	28		50.4

Average Daily Demand:	280	L/capita/day				
	9.8	L/min	0.2	L/s	2.6	USgpm
Maximum Daily Demand:	8.7	(Peaking factor for a population of 50.4 interpolated from MOE Design Guidelines for Drinking Water Systems Table 3-3)				
	85.4	L/min	1.4	L/s	22.6	USgpm
Maximum Hourly Demand:	13.1	(Peaking factor for a population of 50.4 interpolated from MOE Design Guidelines for Drinking Water Systems Table 3-3)				
	128.6	L/min	2.1	L/s	34.0	USgpm

Building A:

Elevation of Water Meter:	87.23	m				
Basement Floor Elevation:	86.33	m				
Minimum HGL:	127.4	m				
Static Pressure at Water Meter:	40.2	m	394	kPa	57	psi
Maximum HGL:	130.6	m				
Static Pressure at Water Meter:	43.4	m	425	kPa	62	psi

Building B:

Elevation of Water Meter:	87.45	m				
Basement Floor Elevation:	86.55	m				
Minimum HGL:	127.4	m				
Static Pressure at Water Meter:	40.0	m	392	kPa	57	psi
Maximum HGL:	130.6	m				
Static Pressure at Water Meter:	43.2	m	423	kPa	61	psi

Building C:

Elevation of Water Meter:	87.47	m				
Basement Floor Elevation:	86.57	m				
Minimum HGL:	127.4	m				
Static Pressure at Water Meter:	39.9	m	391	kPa	57	psi
Maximum HGL:	130.6	m				
Static Pressure at Water Meter:	43.1	m	423	kPa	61	psi

Boundary Conditions
6408 Renaud – R1

Provided Information

Scenario	Demand	
	L/min	L/s
Average Daily Demand	6.0	0.10
Maximum Daily Demand	78.0	1.30
Peak Hour	114.0	1.90
Fire Flow Demand #1	3,600	60.00

Location

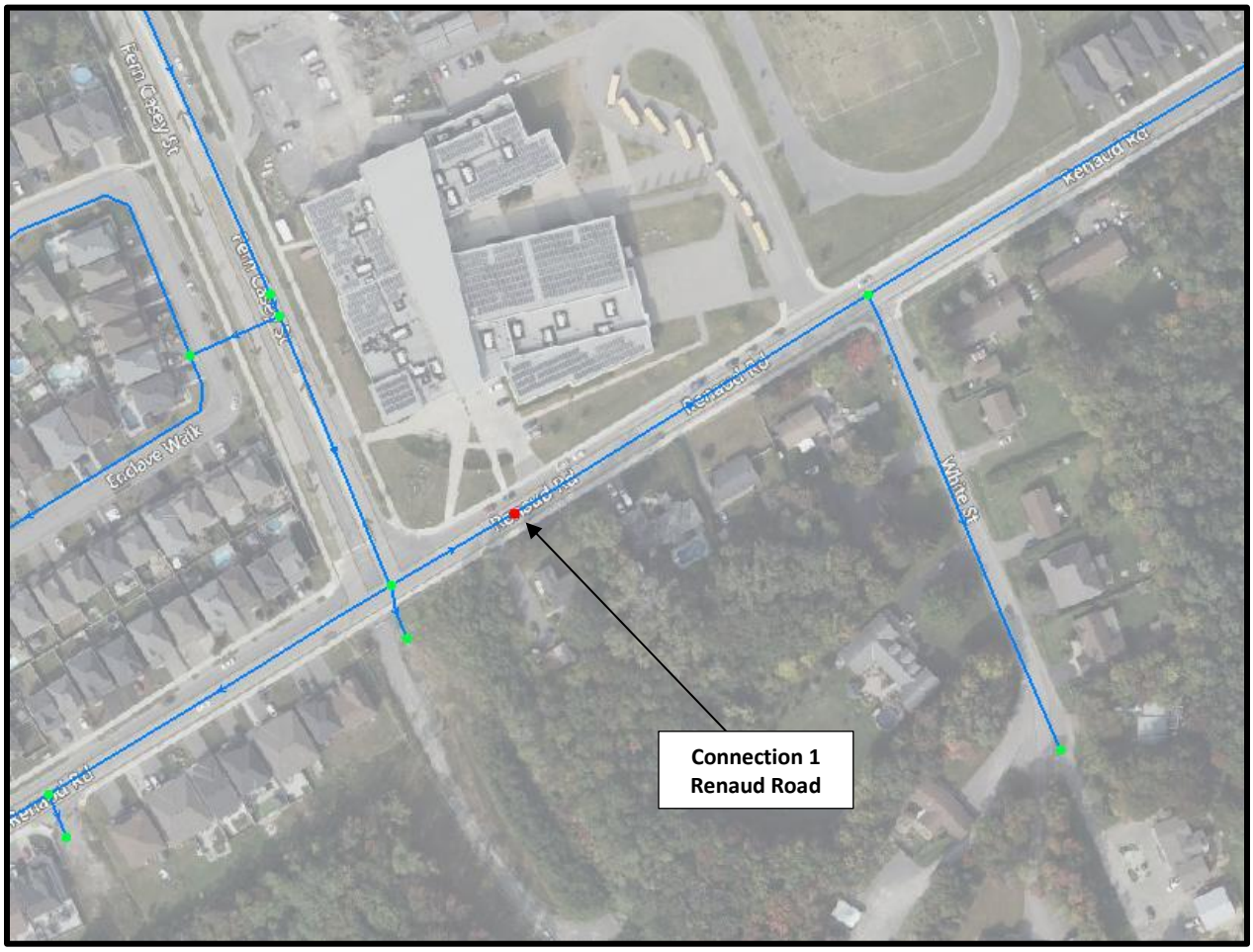

Results

Connection 1 – Renaud Road

Demand Scenario	Head (m)	Pressure[1] (psi)
Maximum HGL	130.6	60.9
Peak Hour	127.4	56.4
Max Day plus Fire Flow #1	127.4	56.4

[1] Ground Elevation = 87.7 m

Disclaimer

The boundary condition information is based on current operation of the city water distribution system. The computer model simulation is based on the best information available at the time. The operation of the water distribution system can change on a regular basis, resulting in a variation in boundary conditions. The physical properties of watermains deteriorate over time, as such must be assumed in the absence of actual field test data. The variation in physical watermain properties can therefore alter the results of the computer model simulation. Fire Flow analysis is a reflection of available flow in the watermain; there may be additional restrictions that occur between the watermain and the hydrant that the model cannot take into account.

APPENDIX C

SANITARY SERVICING

SANITARY SEWER CALCULATIONS

D.B. Gray Engineering Inc.

Stormwater Management - Grading & Drainage - Storm & Sanitary Sewers - Watermains

700 Long Point Circle
Ottawa, Ontario K1T 4E9

613-425-8044
d.gray@dbgrayengineering.com

Project: 6408 Renaud Road
Residential Development
Ottawa, Ontario

Date: November 2, 2026

Residential Average Daily Flow:	280	L/capita/day	Residential Peaking Factor:	Harmon Formula	
Commercial Average Daily Flow:	28,000	L/ha/day	Harmon Formula Correction Factor:	0.8	
Institutional Average Daily Flow:	28,000	L/ha/day	Commercial Peaking Factor:	1.5	
Light Industrial Average Daily Flow:	35,000	L/ha/day	Institutional Peaking Factor:	1.5	
Heavy Industrial Average Daily Flow:	55,000	L/ha/day	Industrial Peaking Factor:	Ministry of the Environment	
Infiltration Allowance:	0.33	L/s/ha	Manning's Roughness Coefficient:	0.013	

		Residential													Commercial				Infiltration			Q	Sewer Data						
		Individual									Cumulative				Individual	Cumulative			Individual	Cumulative		Total							
Location		Single	Townhouse	Duplex	Apartment	Apartment	Apartment	Apartment	Area	Population	Area	Population	Peaking	Flow Rate	Area	Area	Peaking	Flow Rate	Area	Area	Flow Rate	Flow Rate	Length	Nominal Diameter	Actual Diameter	Slope	Velocity	Q_{Full} Capacity	
From	To	Family			(1 Bed)	(2 Bed)	(3 Bed)	(Average)	(ha)		(ha)		Factor	(L/s)	(ha)	(ha)	Factor	(L/s)	(ha)	(ha)	(L/s)	(L/s)	(m)	(mm)	(mm)	(%)	(m/s)	(L/s)	Q / Q_{Full}
		ppu = 3.4	ppu = 2.7	ppu = 2.3	ppu = 1.4	ppu = 2.1	ppu = 3.1	ppu = 1.8																					
Existing	250 SAN	1							0.1300	3.4	0.1300	3.4	3.2	0.04					0.1300	0.1300	0.04	0.08							
MH-SA.1	MH-SA.2							24	0.1300	43.2	0.1300	43.2	3.2	0.45					0.1300	0.1300	0.04	0.49	25.2	200	200	0.65	0.84	26.44	2%
MH-SA.2	250 SAN							4	0.0000	7.2	0.1300	50.4	3.2	0.52					0.0000	0.1300	0.04	0.57	20	200	200	0.65	0.84	26.44	2%
																						Existing 200 mm Renaud Road Municipal Sanitary Sewer:		200	200	0.40	0.66	20.74	

APPENDIX D

STORMWATER MANAGEMENT

SUMMARY TABLES

100-YEAR EVENT

Drainage Area	Pre-Development Flow Rate (L/s)	Maximum Allowable Release Rate (L/s)	Maximum Release Rate (L/s)	Maximum Volume Required (cu.m)	Maximum Volume Stored (cu.m)
AREA I (Uncontrolled Flow Off Site)	-	-	5.27	-	-
AREA II	-	-	9.56	38.93	38.93
TOTAL	30.65	14.84	14.84	38.93	38.93

5-YEAR EVENT

Drainage Area	Pre-Development Flow Rate (L/s)	Maximum Allowable Release Rate (L/s)	Maximum Release Rate (L/s)	Maximum Volume Required (cu.m)	Maximum Volume Stored (cu.m)
AREA I (Uncontrolled Flow Off Site)	-	-	2.61	-	-
AREA II	-	-	6.71	18.41	18.41
TOTAL	14.84	14.84	9.31	18.41	18.41

November 2, 2026

6408 Renaud Road

Ottawa, Ontario

STORMWATER MANAGEMENT CALCULATIONS

Modified Rational Method

PRE-DEVELOPMENT CONDITIONS

100-YEAR EVENT

			C
Roof Area:	155	sq.m	1.00
Hard Area:	30	sq.m	1.00
Gravel Area:	200	sq.m	1.00
Soft Area:	930	sq.m	0.25
Total Catchment Area:	1,315	sq.m	0.47
Time of Concentration:	10	min	
Rainfall Intensity (i):	179	mm/hr	
100-Year Pre-Development Flow Rate (2.78AiC):	30.65	L/s	

5-YEAR EVENT

			C
Roof Area:	155	sq.m	0.90
Hard Area:	30	sq.m	0.90
Gravel Area:	200	sq.m	0.80
Soft Area:	930	sq.m	0.20
Total Catchment Area:	1,315	sq.m	0.39
Time of Concentration:	10	min	
Rainfall Intensity (i):	104	mm/hr	
5-Year Pre-Development Flow Rate (2.78AiC):	14.84	L/s	

100-YEAR EVENT

DRAINAGE AREA I (Uncontrolled Flow Off Site)

(100-YEAR EVENT)

			C
Roof Area:	0	sq.m	1.00
Hard Area:	50	sq.m	1.00
Gravel Area:	0	sq.m	1.00
Soft Area:	225	sq.m	0.25
Total Catchment Area:	275	sq.m	0.39
Area (A):	275	sq.m	
Time of Concentration:	10	min	
Rainfall Intensity (i):	179	mm/hr	
Runoff Coeficient (C):	0.39		
Flow Rate (2.78AiC):	5.27	L/s	

DRAINAGE AREA II

(100-YEAR EVENT)

			C
Roof Area:	480	sq.m	1.00
Hard Area:	505	sq.m	1.00
Gravel Area:	0	sq.m	1.00
Soft Area:	55	sq.m	0.25
Total Catchment Area:	1,040	sq.m	0.96

Water Elevation:	87.88	m
Head:	3.19	m
Centroid of ICD Orifice:	84.69	m
Invert of Outlet Pipe of CB/MH-1:	84.65	m
Orifice Diameter:	75	mm
Orifice Area:	4,418	sq.mm
Discharge Coefficient:	0.274	
Maximum Release Rate:	9.56	L/s

Surface Storage

CB/MH	Top Area	Depth	Volume	
CB/MH-1	211	0.14	9.88	cu.m

Chamber Storage

No. of Chambers	Volume Per Chamber	No. of Rows	No. of End Caps	Volume Per End Cap	Volume	
4	3.10	1	2	1.12	14.64	cu.m

Clear Stone Storage

Length	Width	Depth	Volume	40% Voids	
7.164	3.163	1.82	26.60	10.64	cu.m

CB/MH Storage

CB/MH	Invert	Size	Volume	
CB/MH-1	84.65	1.219	3.77	cu.m

Maximum Volume Stored:	38.93	cu.m
Maximum Volume Required:	38.93	cu.m

DRAINAGE AREA II (Continued)

(100-YEAR EVENT)

Time (min)	i (mm/hr)	2.78AiC (L/s)	Average Release Rate (L/s)	Stored Rate (L/s)	Required Storage Volume (cu.m)
10	179	49.58	4.78	44.80	26.88
15	143	39.67	4.78	34.89	31.40
20	120	33.30	4.78	28.52	34.23
25	104	28.83	4.78	24.05	36.08
30	92	25.51	4.78	20.73	37.31
35	83	22.93	4.78	18.15	38.11
40	75	20.86	4.78	16.08	38.60
45	69	19.17	4.78	14.39	38.85
50	64	17.76	4.78	12.98	38.93
55	60	16.55	4.78	11.77	38.85
60	56	15.52	4.78	10.74	38.65
65	53	14.62	4.78	9.84	38.36
70	50	13.82	4.78	9.04	37.98
75	47	13.12	4.78	8.34	37.52
80	45	12.49	4.78	7.71	37.01
85	43	11.93	4.78	7.14	36.44
90	41	11.41	4.78	6.63	35.82
95	39	10.95	4.78	6.17	35.15
100	38	10.52	4.78	5.74	34.45
105	36	10.13	4.78	5.35	33.72
110	35	9.77	4.78	4.99	32.95
115	34	9.44	4.78	4.66	32.15
120	33	9.13	4.78	4.35	31.33
125	32	8.85	4.78	4.06	30.49
130	31	8.58	4.78	3.80	29.62
135	30	8.33	4.78	3.55	28.73
140	29	8.09	4.78	3.31	27.82
145	28	7.87	4.78	3.09	26.90
150	28	7.67	4.78	2.88	25.96
180	24	6.64	4.78	1.85	20.03
210	21	5.87	4.78	1.09	13.72
240	19	5.28	4.78	0.50	7.13
270	17	4.80	4.78	0.02	0.32
300	16	4.41	4.41	0.00	0.00

5-YEAR EVENT

DRAINAGE AREA I (Uncontrolled Flow Off Site)

(5-YEAR EVENT)

			C
Roof Area:	0	sq.m	0.90
Hard Area:	50	sq.m	0.90
Gravel Area:	0	sq.m	0.80
Soft Area:	225	sq.m	0.20
Total Catchment Area:	275	sq.m	0.33
Area (A):	275	sq.m	
Time of Concentration:	10	min	
Rainfall Intensity (i):	104	mm/hr	
Runoff Coeficient (C):	0.33		
Flow Rate (2.78AiC):	2.61	L/s	

DRAINAGE AREA II

(5-YEAR EVENT)

			C
Roof Area:	480	sq.m	0.90
Hard Area:	505	sq.m	0.90
Gravel Area:	0	sq.m	0.80
Soft Area:	55	sq.m	0.20
Total Catchment Area:	1,040	sq.m	0.86

Water Elevation:	86.26	m
Head:	1.57	m
Centroid of ICD Orifice:	84.69	m
Invert of Outlet Pipe of CB/MH-1:	84.65	m
Orifice Diameter:	75	mm
Orifice Area:	4,418	sq.mm
Discharge Coefficient:	0.274	
Maximum Release Rate:	6.71	L/s

Surface Storage

CB/MH	Top Area	Depth	Volume	
CB/MH-1	0	-1.48	0.00	cu.m

Chamber Storage

No. of Chambers	Stage Volume	No. of Rows	No. of End Caps	Stage Volume	Volume	
4	2.52	1	2	0.97	12.02	cu.m

Clear Stone Storage

Length	Width	Depth	Volume	40% Voids	
7.164	3.163	1.03	11.27	4.51	cu.m

CB/MH Storage

CB/MH	Invert	Size	Volume	
CB/MH-1	84.65	1.219	1.88	cu.m

Maximum Volume Stored:	18.41	cu.m
Maximum Volume Required:	18.41	cu.m

DRAINAGE AREA II (Continued)

(5-YEAR EVENT)

Time (min)	i (mm/hr)	2.78AiC (L/s)	Average Release Rate (L/s)	Stored Rate (L/s)	Required Storage Volume (cu.m)
10	104	26.00	3.35	22.64	13.59
15	84	20.85	3.35	17.49	15.74
20	70	17.53	3.35	14.17	17.01
25	61	15.19	3.35	11.84	17.76
30	54	13.46	3.35	10.10	18.18
35	49	12.11	3.35	8.75	18.38
40	44	11.02	3.35	7.67	18.41
45	41	10.14	3.35	6.78	18.32
50	38	9.39	3.35	6.04	18.12
55	35	8.76	3.35	5.41	17.85
60	33	8.22	3.35	4.87	17.52
65	31	7.75	3.35	4.39	17.13
70	29	7.33	3.35	3.97	16.69
75	28	6.96	3.35	3.60	16.22
80	27	6.63	3.35	3.27	15.71
85	25	6.33	3.35	2.98	15.18
90	24	6.06	3.35	2.71	14.62
95	23	5.81	3.35	2.46	14.03
100	22	5.59	3.35	2.24	13.42
105	22	5.38	3.35	2.03	12.80
110	21	5.20	3.35	1.84	12.16
115	20	5.02	3.35	1.67	11.50
120	19	4.86	3.35	1.50	10.83
125	19	4.71	3.35	1.35	10.14
130	18	4.56	3.35	1.21	9.45
135	18	4.43	3.35	1.08	8.74
140	17	4.31	3.35	0.95	8.02
145	17	4.19	3.35	0.84	7.29
150	16	4.08	3.35	0.73	6.56
180	14	3.54	3.35	0.18	1.99
210	13	3.13	3.13	0.00	0.00
240	11	2.82	2.82	0.00	0.00
270	10	2.57	2.57	0.00	0.00
300	9	2.36	2.36	0.00	0.00

CDS ESTIMATED NET ANNUAL TSS LOAD REDUCTION
BASED ON THE RATIONAL RAINFALL METHOD
AND A FINE PARTICLE SIZE DISTRIBUTION

Echelon Environmental
55 Albert Street, Suite #200 | Markham, ON, L3P 2T4
www.echelonenvironmental.ca info@echelonenvironmental.ca 905-948-0000

Project Name:	6408 Renaud Rd	**Engineer:**	**D.B. Gray Engineering**
Location:	Ottawa, ON	**Contact:**	Ryan Faith
OGS ID:	OGS	**Report Date:**	28-Oct-26

Area:	0.104	ha	**Rainfall Station #**	215	
C Value:	0.86		**Particle Size Distribution**	FINE	
CDS Model:	PMSU2015-4		**CDS Treatment Capacity:**	20	l/s

Rainfall Intensity[1] (mm/hr)	Percent Rainfall Volume[1]	Cumulative Rainfall Volume	Total Flowrate (l/s)	Treated Flowrate (l/s)	Operating Rate (%)	Removal Efficiency (%)	Incremental Removal (%)
0.5	9.2%	9.2%	0.1	0.1	0.6	96.7	8.9
1.0	10.6%	19.8%	0.2	0.2	1.2	96.6	10.3
1.5	9.9%	29.7%	0.4	0.4	1.9	96.4	9.5
2.0	8.4%	38.1%	0.5	0.5	2.5	96.3	8.1
2.5	7.7%	45.8%	0.6	0.6	3.1	96.2	7.4
3.0	5.9%	51.7%	0.7	0.7	3.7	96.1	5.7
3.5	4.4%	56.1%	0.9	0.9	4.3	95.9	4.2
4.0	4.7%	60.7%	1.0	1.0	4.9	95.8	4.5
4.5	3.3%	64.0%	1.1	1.1	5.6	95.7	3.2
5.0	3.0%	67.1%	1.2	1.2	6.2	95.6	2.9
6.0	5.4%	72.4%	1.5	1.5	7.4	95.3	5.1
7.0	4.4%	76.8%	1.7	1.7	8.7	95.0	4.1
8.0	3.5%	80.3%	2.0	2.0	9.9	94.8	3.4
9.0	2.8%	83.2%	2.2	2.2	11.1	94.5	2.7
10.0	2.2%	85.3%	2.5	2.5	12.4	94.3	2.1
15.0	7.0%	92.3%	3.7	3.7	18.5	93.0	6.5
20.0	4.5%	96.9%	5.0	5.0	24.7	91.8	4.2
25.0	1.4%	98.3%	6.2	6.2	30.9	90.5	1.3
30.0	0.7%	99.0%	7.5	7.5	37.1	89.2	0.6
35.0	0.5%	99.5%	8.7	8.7	43.3	88.0	0.4
40.0	0.5%	100.0%	9.9	9.9	49.5	86.7	0.5
45.0	0.0%	100.0%	11.2	11.2	55.6	85.4	0.0
50.0	0.0%	100.0%	12.4	12.4	61.8	84.2	0.0
				Predicted Net Annual TSS Removal Efficiency =			**95%**
				Predicted Annual Rainfall Treated =			**99%**

1 - Based on 42 years of hourly rainfall data from Canadian Station 6105976, Ottawa ON
2 - CDS Efficiency based on testing conducted at the University of Central Florida
3 - CDS design flowrate and scaling based on standard manufacturer model & product specifications

CDS PMSU 2015-4-C DESIGN NOTES

THE STANDARD CDS PMSU 2015-4-C CONFIGURATION IS SHOWN.

ANTI-BUOYANCY SLAB MAY BE INCLUDED (NOT SHOWN).

SUMP DEPTH SHOWN IS TYPICAL, CAN BE EXTENDED AS REQUIRED.

HYDRAULIC CHARACTERISTICS VARY BASED ON PIPE SIZE, MATERIAL, AND CDS UNIT SELECTION. FOR CUSTOM HYDRAULIC ANALYSIS PLEASE CONTACT ECHELON ENVIRONMENTAL.

FOR SITE SPECIFIC DRAWINGS PLEASE CONTACT ECHELON ENVIRONMENTAL.

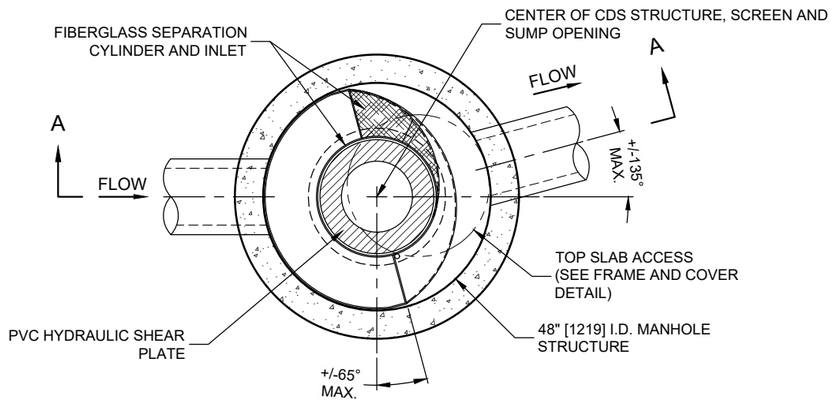

PLAN VIEW B-B
N.T.S.

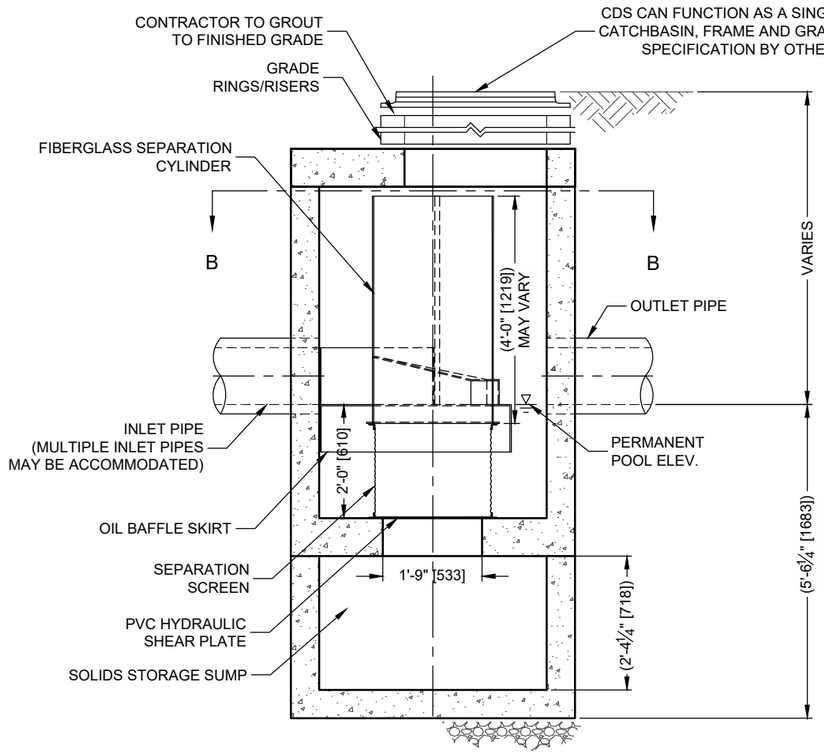

ELEVATION A-A
N.T.S.

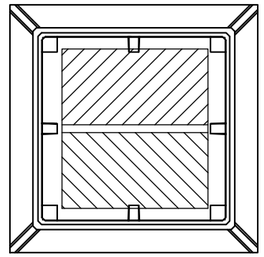

FRAME AND GRATE
(DIMENSIONS VARIES)
N.T.S.

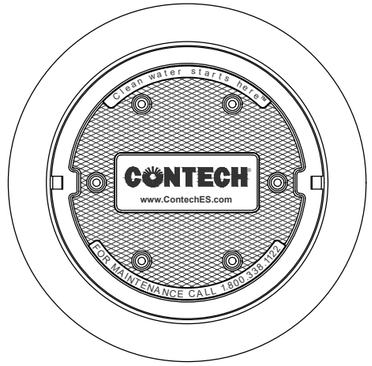

FRAME AND COVER
(DIAMETER VARIES)
N.T.S.

GENERAL NOTES

1. CONTECH TO PROVIDE ALL MATERIALS UNLESS NOTED OTHERWISE.
2. DIMENSIONS MARKED WITH ( ) ARE REFERENCE DIMENSIONS. ACTUAL DIMENSIONS MAY VARY.
3. FOR FABRICATION DRAWINGS WITH DETAILED STRUCTURE DIMENSIONS AND WEIGHTS, PLEASE CONTACT YOUR CONTECH ENGINEERED SOLUTIONS LLC REPRESENTATIVE. www.ContechES.com
4. CDS WATER QUALITY STRUCTURE SHALL BE IN ACCORDANCE WITH ALL DESIGN DATA AND INFORMATION CONTAINED IN THIS DRAWING.
5. STRUCTURE SHALL MEET AASHTO HS20 LOAD RATING, ASSUMING GROUNDWATER ELEVATION AT, OR BELOW, THE OUTLET PIPE INVERT ELEVATION. ENGINEER OF RECORD TO CONFIRM ACTUAL GROUNDWATER ELEVATION. CASTINGS SHALL MEET HS20 (AASHTO M 306) AND BE CAST WITH THE CONTECH LOGO.
6. IF REQUIRED, PVC HYDRAULIC SHEAR PLATE IS PLACED ON SHELF AT BOTTOM OF SCREEN CYLINDER. REMOVE AND REPLACE AS NECESSARY DURING MAINTENANCE CLEANING.

INSTALLATION NOTES

A. ANY SUB-BASE, BACKFILL DEPTH, AND/OR ANTI-FLOTATION PROVISIONS ARE SITE-SPECIFIC DESIGN CONSIDERATIONS AND SHALL BE SPECIFIED BY ENGINEER OF RECORD.
B. CONTRACTOR TO PROVIDE EQUIPMENT WITH SUFFICIENT LIFTING AND REACH CAPACITY TO LIFT AND SET THE CDS MANHOLE STRUCTURE (LIFTING CLUTCHES PROVIDED).
C. CONTRACTOR TO ADD JOINT SEALANT BETWEEN ALL STRUCTURE SECTIONS, AND ASSEMBLE STRUCTURE.
D. CONTRACTOR TO PROVIDE, INSTALL, AND GROUT PIPES. MATCH PIPE INVERTS WITH ELEVATIONS SHOWN.
E. CONTRACTOR TO TAKE APPROPRIATE MEASURES TO ASSURE UNIT IS WATER TIGHT, HOLDING WATER TO FLOWLINE INVERT MINIMUM. IT IS SUGGESTED THAT ALL JOINTS BELOW PIPE INVERTS ARE GROUTED.

ECHELON ENVIRONMENTAL
55 ALBERT STREET, MARKHAM ON L3P2T4
CONTACT: INFO@ECHELONENVIRONMENTAL.CA
905-948-0000

THIS PRODUCT MAY BE PROTECTED BY ONE OR MORE OF THE FOLLOWING U.S. PATENTS: 5,788,848; 6,641,720; 6,511,595; 6,581,783; RELATED FOREIGN PATENTS, OR OTHER PATENTS PENDING.

CONTECH ENGINEERED SOLUTIONS LLC

CDS PMSU 2015-4-C
ONLINE CDS
STANDARD DETAIL

DATE: 13-FEB-25
REVISION:1
DRAWN BY: PG

D.B. Gray Engineering Inc.

Stormwater Management - Grading & Drainage - Storm & Sanitary Sewers - Watermains

700 Long Point Circle
Ottawa, Ontario K1T 4E9

613-425-8044
d.gray@dbgrayengineering.com

STORM SEWER CALCULATIONS

Rational Method

5-YEAR EVENT

Project: 6408 Renaud Road
Residential Development
Ottawa, Ontario

Date: November 2, 2026

Manning's Roughness Coefficient: 0.013

Location		Individual					Cumulative				Sewer Data							
From	To	Roof C = 0.90 (ha)	Hard C = 0.90 (ha)	Gravel C = 0.80 (ha)	Soft C = 0.20 (ha)	2.78AC	2.78AC	Time (min)	Rainfall Intensity (mm/hr)	Q Flow Rate (L/s)	Length (m)	Nominal Diameter (mm)	Actual Diameter (mm)	Slope (%)	Velocity (m/s)	Q_{Full} Capacity (L/s)	Time (min)	Q / Q_{Full}
CB/MH-1	MH-2	0.0480	0.0505		0.0055	0.2495	0.2495	10.00	104	26.00	3.8	250	250	0.432	0.80	39.09	0.08	67%
MH-2	OGS MH-3					0.0000	0.2495	10.08	104	25.89	19	250	250	0.432	0.80	39.09	0.40	66%
OGS MH-3	1500 ST					0.0000	0.2495	10.48	102	25.38	14.4	250	250	0.432	0.80	39.09	0.30	65%
										Existing 1,500 mm Renaud Road Municipal Storm Sewer:		1,500	1,525	0.12	1.40	2,559		

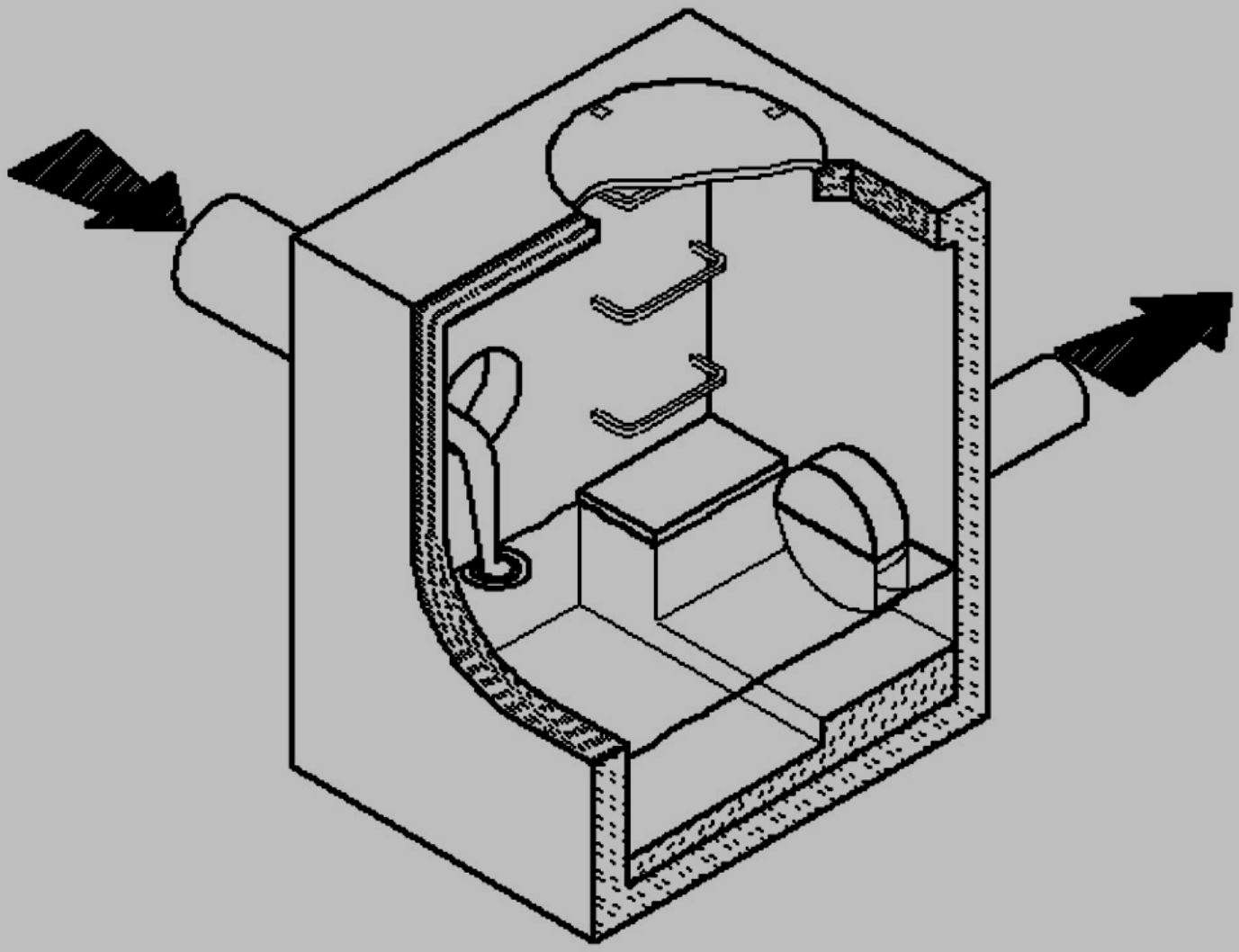

VEOLIA

HYDROVEX® VHV/SVHV
Vertical Vortex Flow Regulator
CSO, SSO, Stormwater Management

WATER TECHNOLOGIES

HYDROVEX® VHV / SVHV Vertical Vortex Flow Regulator

Application

One of the major problems of urban wet weather flow management is the runoff generated by heavy rainfall. During a storm event, uncontrolled flows may overload the drainage system and cause flooding. Wear and deterioration on the network are increased dramatically as a result of increased flow velocities. In a combined sewer system, the wastewater treatment plant will experience a significant increase in flows during storms, thereby losing its treatment efficiency. A simple means of managing excessive storm water runoff is to control the flows at their point of origin, the manhole.

The HYDROVEX® VHV / SVHV line of vortex flow regulators is ideal for point source control of low to medium stormwater flows in manholes, catch basins and other retention structures. The HYDROVEX® VHV / SVHV design is based on the fluid mechanics principle of the forced vortex. The discharge is controlled by an air-filled vortex which reduces the effective water passage area without physically reducing orifice size. This effect grants precise flow regulation without the use of moving parts or electricity, and allows for larger inlet and outlet openings compared to the basic orifice. Although the concept is quite simple, many years of research and testing have been invested to optimize the performance of our vortex technology.

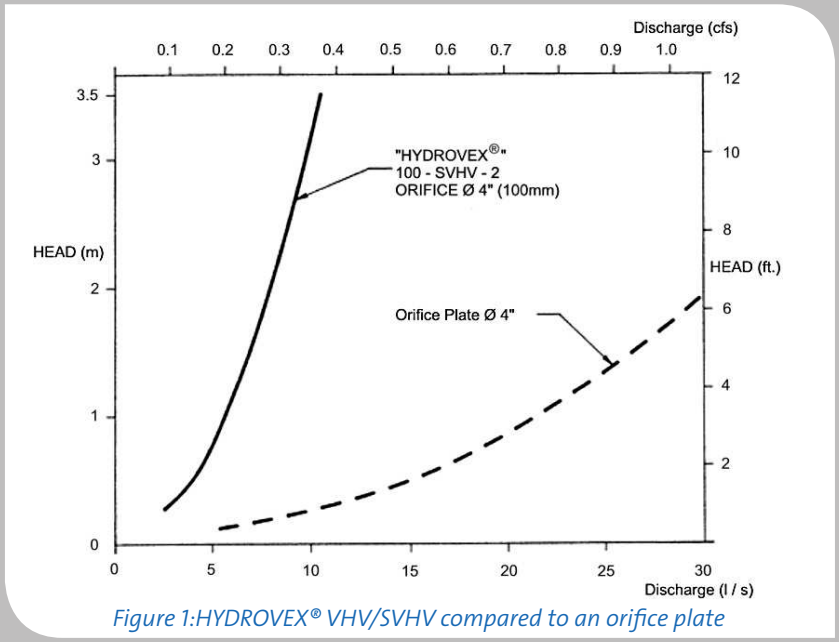

Figure 1:HYDROVEX® VHV/SVHV compared to an orifice plate

Vortex valves have openings typically 4 to 6 times larger than an orifice plate for the same design. Larger opening sizes decrease the chance of blockage caused by sediments and debris found in storm water flows. Figure 1 shows the discharge curve of a vortex regulator compared to an equally sized orifice plate. For an identical opening size, the flow is approximately four times smaller than the orifice plate for the same upstream water pressure.

Advantages

- Large inlet/outlet openings reduce the chance of clogging
- Openings typically 4-6 times larger than the basic orifice (Figure 1)
- Outlet orifice always equal or larger than inlet
- Ideal for precise control of low to medium stormwater flow applications
- Submerged inlet for floatables control
- No moving parts or electricity required
- Durable and robust stainless steel construction
- Minimal maintenance
- Easy to install

Selection

Selecting a VHV/SVHV regulator is easily achieved using Figure 3. Each selection is made using the maximum allowable flow rate and the maximum allowable upstream water pressure (head). The area in which the design point falls will designate the required model. The maximum design head is defined as the difference between the maximum upstream water level and the invert of the outlet pipe. All selections should be verified by a John Meunier Inc. representative prior to fabrication.

Design example:

- Maximum discharge: 6 L/s (0.2 cfs)*
- Maximum design head 2m (6.56 ft.)**
- Using Figure 3, model 75 VHV-1 is selected

**The selection chart provided assumes free flowing downstream conditions. Should the outlet pipe be >80% full at design flow, a larger pipe diameter should be used. In the above example, the minimum outlet pipe diameter and slope would be 150mm (6in), 0.3%.*

***The design head is defined as the difference between the maximum upstream water level and the outlet pipe invert.*

The HYDROVEX® VHV / SVHV vortex flow regulators can be installed in circular or square manholes. The table below lists the minimum dimensions and clearances required for each regulator model. It is imperative to respect the minimum clearances shown to ensure ease of installation and proper functioning of the regulator.

Model	Regulator Diameter A (mm) [in]	CIRCULAR Minimum Manhole Diameter B (mm) [in]	SQUARE Minimum Chamber Width B (mm) [in]	Minimum Outlet Pipe Diameter C (mm) [in]	Minimum Clearance H (mm) [in]
25 SVHV-1	125 [5]	600 [24]	600 [24]	150 [6]	150 [6]
32 SVHV-1	150 [6]	600 [24]	600 [24]	150 [6]	150 [6]
40 SVHV-1	200 [8]	600 [24]	600 [24]	150 [6]	150 [6]
50 VHV-1	150 [6]	600 [24]	600 [24]	150 [6]	150 [6]
75 VHV-1	250 [10]	600 [24]	600 [24]	150 [6]	150 [6]
100 VHV-1	325 [13]	900 [36]	600 [24]	150 [6]	200 [8]
125 VHV-2	275 [11]	900 [36]	600 [24]	150 [6]	200 [8]
150 VHV-2	350 [14]	900 [36]	600 [24]	150 [6]	225 [9]
200 VHV-2	450 [18]	1200 [48]	900 [36]	200 [8]	300 [12]
250 VHV-2	575 [23]	1200 [48]	900 [36]	250 [10]	350 [14]
300 VHV-2	675 [27]	1600 [64]	1200 [48]	250 [10]	400 [16]
350 VHV-2	800 [32]	1800 [72]	1200 [48]	300 [12]	500 [20]

Figure 2a: Minimum dimensions and clearances, circular manhole

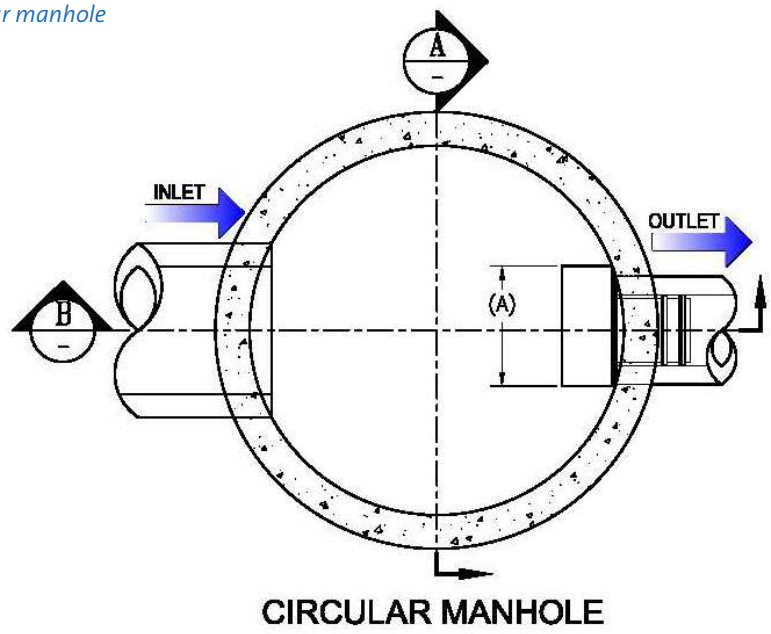

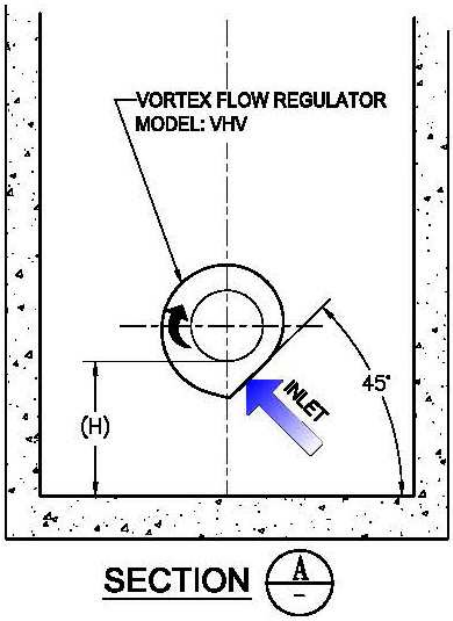

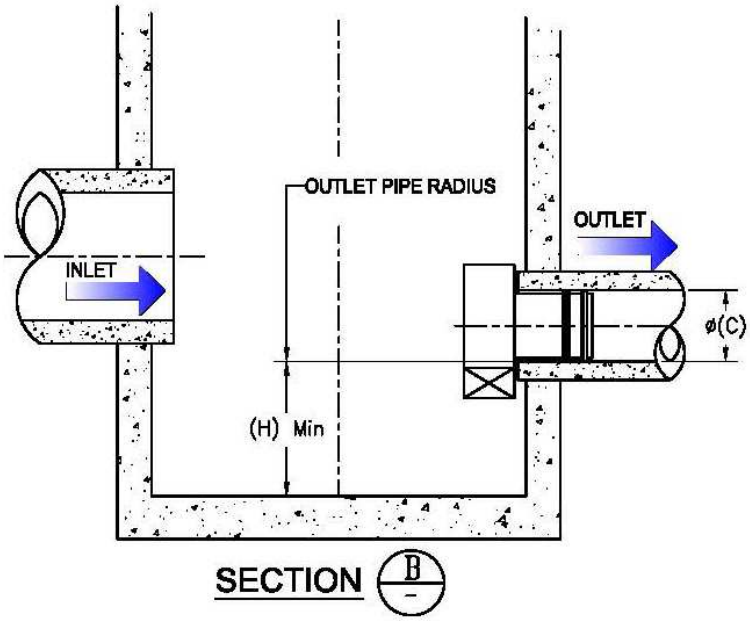

Figure 2b: Minimum dimensions and clearances, square/rectangular manhole

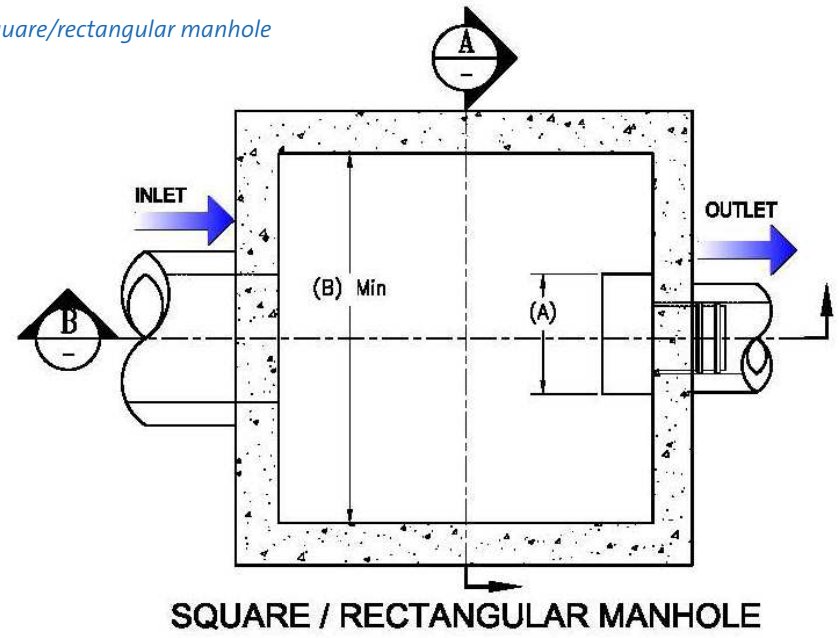

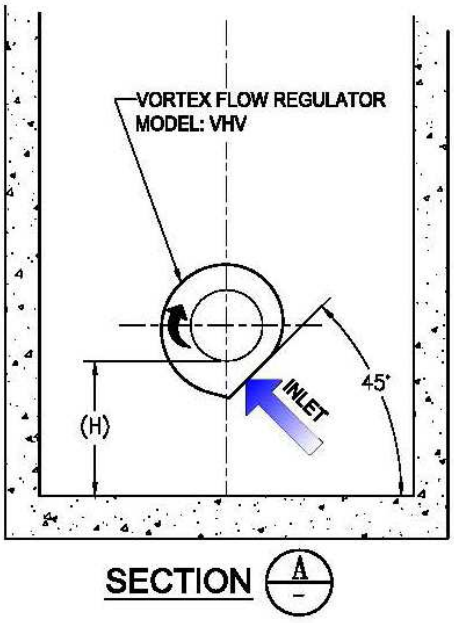

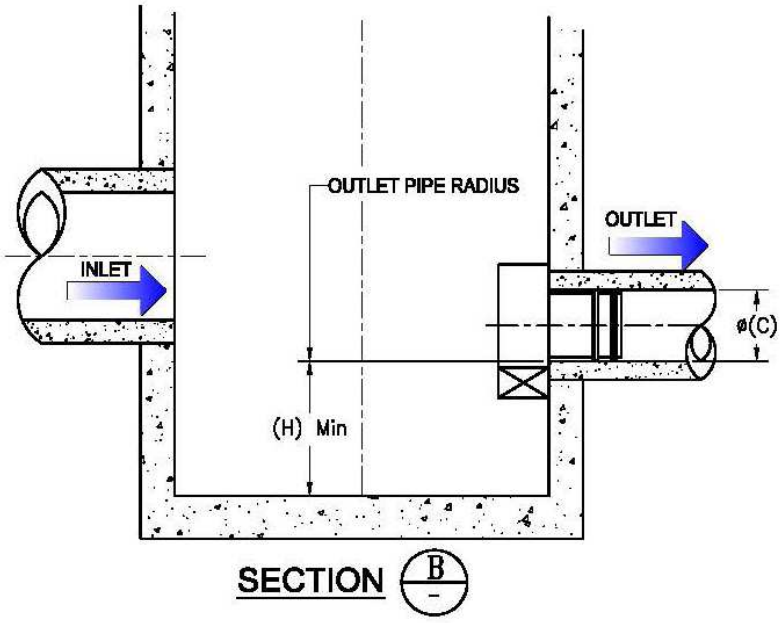

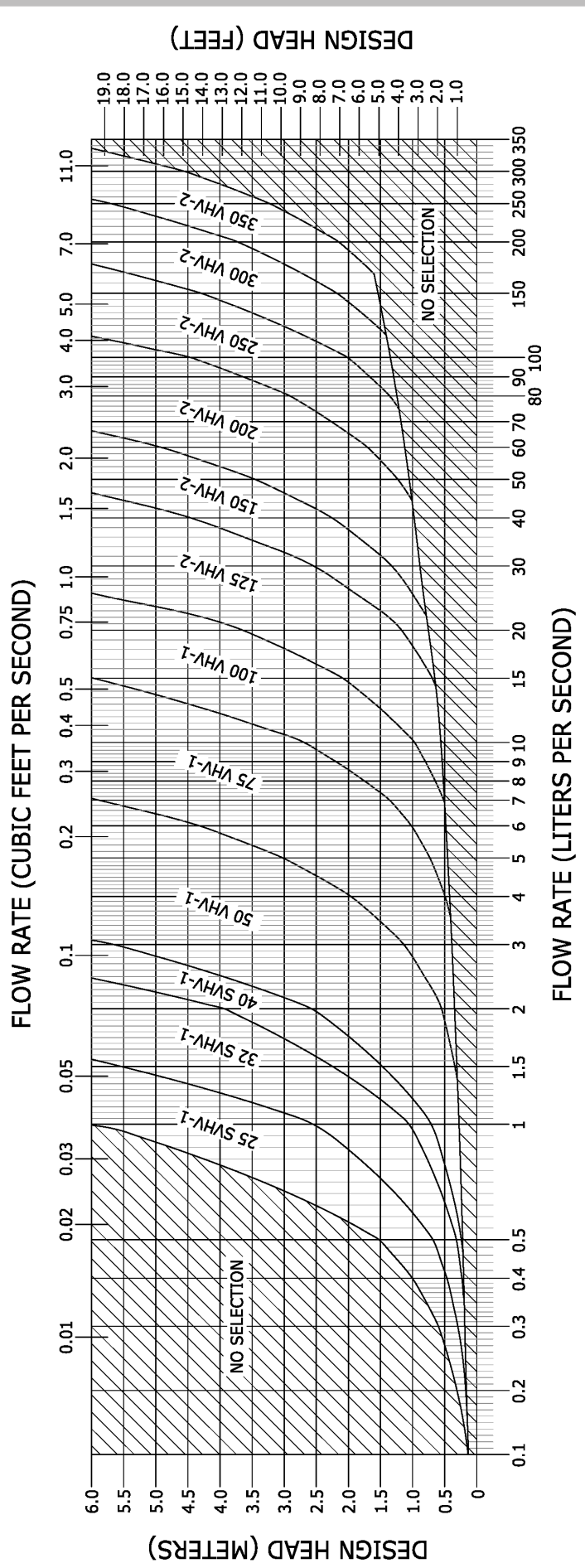

Figure 3 : HYDROVEX® VHV/SVHV Selection Chart

Options

A variety of options are available for the HYDROVEX® VHV / SVHV vortex flow regulators, including:

- Type O: extended inlet for odor control
- FV-VHV: sliding plate mounted
- Gooseneck: for shallow or no sump installations
- Vent: for low slope applications

DT: roof drainage applications

Specifications

In order to specify a HYDROVEX® VHV/SVHV flow regulator, the following parameters must be clearly indicated:

- Model number, ex: 75-VHV-1
- Outlet pipe diameter and type, ex: ø 150mm [6”], SDR 35
- Design discharge rate, ex: 6.0 L/s [0.21 CFS]
- Design head, ex: 2.0 m [6.56 ft] *
- Manhole diameter, ex: ø 900 mm [ø 36”]
- Minimum clearance “H”, ex: 150 mm [6 in]
- Construction material type (304 stainless steel standard)

**The design head is defined as the difference between the maximum upstream water level and the outlet pipe invert.*

Installation

The installation of a HYDROVEX® VHV/SVHV flow regulator can be accomplished quickly and does not require any special tools. The sleeve of the vortex flow regulator is simply inserted into the outlet pipe of the manhole and the unit is then secured to the concrete wall using the supplied anchor.

Maintenance

HYDROVEX® regulators are designed to minimize maintenance requirements. We recommend a periodic visual inspection in order to ensure that the unit is free of debris. The manhole sump beneath the unit should be inspected and cleaned with a vacuum truck periodically to remove accumulated sediments.

Guaranty

The HYDROVEX® line of VHV / SVHV regulators are guaranteed against both design and manufacturing defects for a period of 5 years after sale. The unit will be modified or replaced should it be found to be defective within the guarantee period.

Resourcing the world

Veolia Water Technologies

4105 Sartelon • Saint-Laurent, Quebec • H4S 2B3 Canada

T.: 514-334-7230 • F.: 514-334-5070 • Sales Direct Line: 1-855-564-3747

cso@veolia.com • www.veoliawatertechnologies.ca

Veolia Water Technologies Communications - 11/2014 - © Veolia Photo Library