Ashbury College - Synthetic Turf Field

Site Stormwater Management Report - Revision 2

Stantec

Prepared for:
Ashbury College

Date:
November 20, 2026

Prepared by:
Stantec Consulting Ltd.

Project/File:
116501019

Stantec Consulting Ltd.

Revision Record

Revision	Description	Author	Date	Quality Check	Date	Independent Review	Date
00	Issued for SPC	ALG	2026-04-16	DT	2026-04-20	MW	2026-04-20
01	Re-Issued for SPC	ALG	2026-09-16	DT	2026-09-18	MW	2026-09-17
02	Re-Issued for SPC	ALG	2026-11-20	DT	2026-11-12	MW	2026-11-12

Disclaimer

The conclusions in the Report titled Ashbury College - Synthetic Turf Field Site Stormwater Management Report Revision 2 are Stantec's professional opinion, as of the time of the Report, and concerning the scope described in the Report. The opinions in the document are based on conditions and information existing at the time the scope of work was conducted and do not take into account any subsequent changes. The Report relates solely to the specific project for which Stantec was retained and the stated purpose for which the Report was prepared. The Report is not to be used or relied on for any variation or extension of the project, or for any other project or purpose, and any unauthorized use or reliance is at the recipient's own risk.

Stantec has assumed all information received from Ashbury College (the "Client") and third parties in the preparation of the Report to be correct. While Stantec has exercised a customary level of judgment or due diligence in the use of such information, Stantec assumes no responsibility for the consequences of any error or omission contained therein.

This Report is intended solely for use by the Client in accordance with Stantec's contract with the Client. While the Report may be provided by the Client to applicable authorities having jurisdiction and to other third parties in connection with the project, Stantec disclaims any legal duty based upon warranty, reliance or any other theory to any third party, and will not be liable to such third party for any damages or losses of any kind that may result.

Prepared by: 

Signature

Alyssa Gladish, P.Eng.

Printed Name

Reviewed by: 

Signature

Michael Wu, P.Eng.

Printed Name



Approved by: 

Signature

Dustin Thiffault, P.Eng.

Printed Name

Table of Contents

1 Introduction 1.1
1.1 Objectives 1.1
1.2 References 1.3
2 Stormwater Management and Servicing 2.4
2.1 Objectives 2.4
2.2 SWM Criteria and Constraints 2.4
2.2.1 General 2.4
2.2.2 Storm Sewer & Inlet Controls 2.4
2.2.3 Surface Storage & Overland Flow 2.5
2.3 Background 2.5
2.4 Analysis 2.6
2.4.1 Design Methodology 2.6
2.4.2 Existing Conditions 2.6
2.4.3 Allowable Release Rate 2.9
2.4.4 Uncontrolled Catchments 2.9
2.4.5 Storage Requirements 2.9
2.4.6 SWMM Dual Drainage Methodology 2.10
2.4.7 Design Storms 2.11
2.4.8 Modeling Parameters 2.12
2.4.9 Hydraulic Parameters 2.12
2.4.10 Boundary Conditions 2.13
2.5 Modeling Results and Discussion 2.13
2.5.1 Proposed Inlet Control Devices 2.13
2.5.2 Proposed Development Hydraulic Grade Line Analysis 2.14
2.5.4 Quantity Control Results 2.15
2.5.5 LID Design Considerations 2.17
2.6 Stormwater Servicing 2.19
3 Grading and Drainage 3.1
4 Geotechnical Considerations 4.2
5 Utilities 5.1
6 Erosion and Sediment Control During Construction 6.1
7 Approvals 7.2
8 Conclusions 8.1

List of Tables

Table 2.1: General Subcatchment Parameters 2.12
Table 2.2: Subcatchment Parameters 2.12
Table 2.3: Exit Loss Coefficients for Bends at Manholes 2.13
Table 2.4: Orifice Parameters for Proposed Catchments 2.13
Table 2.5: Proposed Orifice Link Results 2.14
Table 2.6: Worst Case Hydraulic Grade Line Results 2.14
Table 2.7: Proposed Maximum Static and Dynamic Surface Water Depths 2.15
Table 2.8: Target and Resultant Major and Minor System Release Rates 2.15
Table 2.9: 100-year Release Rate and Quantity Control Summary 2.15
Table 2.10: Preliminary Design for StormTrap SingleTrap Chamber System 2.16

List of Figures

Figure 1.1: Overall Development Location Plan 1.1
Figure 2.1: Photos of Existing Outlet Catch Basin 2.8
Figure 2.2: Second Existing Catch Basin Identified in the Asphalt Parking Area 2.8
Figure 2.3: Excerpt from Drawing L601 - Detail 1 ..... 2.11

List of Appendices

Appendix A Stormwater Management
A.1 Existing Conditions - Rational Method Calculations
A.2 Pre-Development Time of Concentration
A.3 StormTrap Tank Design
A.4 Table E.2 Groundwater Level Data – Monitoring Wells
A.5 Stormceptor Specifications
A.6 Storm Sewer Design Sheet
A.7 Sample PCSWMM Input and Output Files
A.8 Stage-Storage Curves
A.9 Sewer CCTV Inspection Report
Appendix B Correspondence
B.1 Excerpt from Pre-Consultation Meeting Feedback (City of Ottawa) – Engineering Comments

1 Introduction

Stantec Consulting Ltd. (Stantec) has been commissioned by Ashbury College to prepare the following Site Stormwater Management study in support of a Site Plan Control (SPC) Application for the proposed synthetic turf field to be situated at 362 Mariposa Avenue, in the City of Ottawa, as indicated in **Figure 1-1.** The property is located on the north side of Maple Lane directly north of Ashbury Place. The impacted drainage areas include portions of the property encompassed between Springfield Road to the west, Glenwood Avenue to the east, and a paved pathway to the north.

The 2.41 ha site includes existing buildings, gravel parking areas, walkways, and an existing grass sports field (football/soccer). The site development plan, as indicated on the Site Plan drawing **SP01** developed by Stantec's Landscape Architecture Team, includes converting the existing field from a grass surface to a synthetic turf field. The new synthetic turf significantly increases the site's impervious surface area and impacts the existing underground infiltration system, prompting this study. The purpose of this site stormwater management report is to develop a new stormwater management plan for the quality and quantity control requirements for the impacted portion of the site.

Figure 1.1: Overall Development Location Plan



1.1 Objectives

This stormwater management (SWM) report presents a SWM plan that is free of conflicts, provides on-site SWM in accordance with City of Ottawa Design Guidelines, the pre-consultation meeting feedback (PC2024-0226, dated July 12, 2024), the first submission comments (D07-12-26-0040 submitted March

25,2026), the second submission comments (D07-12-26-0040 received October 16, 2026), and uses the existing municipal infrastructure in accordance with any limitations communicated during consultation with the City of Ottawa staff. Details of the existing infrastructure located within the Springfield Road right of way (ROW) were obtained from available as-built drawings and site topographic survey by Annis, O'Sullivan, Vollebekk Ltd. (December 18, 2018).

Criteria and constraints provided by the City of Ottawa have been used as a basis for the detailed stormwater management plan for the proposed redevelopment. Specific and potential development constraints to be addressed are as follows:

Stormwater Management and Storm Servicing:

- Determine the pre-development (existing) runoff coefficient for the site.
- Define major and minor conveyance systems in conjunction with the proposed grading plan.
- Delineate and characterize stormwater drainage catchments that are impacted by the re-development.
- Determine the stormwater management quantity control storage requirements to meet the 5-year pre-development allowable release rate for the re-developed portions of the site.
- Utilize Low Impact Development (LID) designs for SWM quality and quantity control where feasible.
- Determine the quality control design requirements to meet the enhanced level of treatment requiring 80% Total Suspended Solids (TSS) removal, due to the absence of existing downstream controls.
- Design the proposed onsite private storm sewers which will be connected to the existing 525mm municipal storm sewer located in the Springfield Road ROW.

Grading, Erosion and Sediment Control, and Geotechnical Considerations:

- Prepare a grading plan in accordance with the proposed Site Plan and tie into existing grades at the property lines.
    - Identify key drainage patterns and grading features.
    - Identify the major (emergency) overland flow paths.
    - Identify static ponding areas.
- Provide an Erosion and Sediment Control (ESC) Concept Plan and Best Management Practices
- Incorporate the relevant geotechnical information, constraints, and recommendations.
- Identify utility site constraints (existing infrastructure removals/accommodations, easements, etc.)

1.2 References

Documents referenced in preparation of the design for the Ashbury College Field includes:

- *City of Ottawa Sewer Design Guidelines* (SDG 004) 4th Edition, City of Ottawa, December 2025.
- *Low Impact Development Technical Guidance Report (Draft) – City of Ottawa*, prepared by Dillon Consulting and Aquafor Beech Ltd., November 2019.
- *Low Impact Development Stormwater Management Guidance Manual – Draft for Consultation,* Ministry of the Environment, Conservation and Parks (MECP), January 2022.
- *Stormwater Management Planning and Design Manual*, Ministry of the Environment, Conservation, and Parks (MECP), March 2003.
- *Geotechnical Investigation Report – Ashbury College – 362 Mariposa Avenue, Ottawa, Ontario,* Stantec Consulting Ltd. May 2024.
- *Pre-consultation: Meeting Feedback – Proposed Site Plan Control Application – 362 Mariposa Avenue (File No.: PC2024-0226),* City of Ottawa, July 12, 2024.
- *362 Mariposa Avenue, Ottawa, ON - Stormwater Management and Site Servicing Report,* prepared by R.V. Anderson Associated Ltd., June 2013.

2 Stormwater Management and Servicing

2.1 Objectives

The objective of this stormwater management plan is to determine the measures necessary to control the quantity and quality of stormwater released from the proposed re-development to criteria established within the pre-consultation meeting feedback, and to provide sufficient detail for SPC approval and construction.

2.2 SWM Criteria and Constraints

Criteria were established by combining current design practices outlined by the City of Ottawa Design Guidelines (2025), the Low Impact Development Technical Guidance Report (Draft - 2019), and through consultation with City of Ottawa staff. The following summarizes the criteria, with the source of each criterion indicated in brackets:

2.2.1 General

- Use of the dual drainage principle (City of Ottawa).
- Wherever it is feasible and practical, LID site-level measures should be used to reduce and control the volume and rate of runoff. (City of Ottawa).
- Assess impact of 100-year event outlined in the City of Ottawa Sewer Design Guidelines on major and minor drainage system (City of Ottawa).
- Provide enhanced 80% TSS quality control onsite (City of Ottawa)

2.2.2 Storm Sewer & Inlet Controls

- Size the internal private storm sewers to convey the 2-year storm event under free-flow conditions using City of Ottawa I-D-F parameters (City of Ottawa).
- Determine the pre-development runoff coefficient for the site. Utilize the lesser of this value or 0.5 (City of Ottawa) to determine the 5-year storm event pre-development discharge rate (City of Ottawa).
- Determine the pre-development release rate to the minor system on Springfield Road via the onsite catch basin located in the gravel parking area.
- Site stormwater discharge rates for each storm event up to and including the 100-year event are to be restricted to 5-year storm event pre-development rate (City of Ottawa).
- Existing stormwater outlet options for the site re-development include:
  - the existing municipal 750mm diameter concrete storm sewer which transitions to 675mm diameter concrete storm sewer in the Maple Lane ROW, to the south of the site,
  - the existing municipal 525mm diameter PVC storm sewer in the Springfield Road ROW, to the west of the site, and
  - the existing municipal 300mm diameter PVC storm sewer located in the Glenwood Avenue ROW, to the east of the site.

As determined through the first submission comments, the storm sewer in the Maple Lane ROW does not have the capacity to receive the post-development flows from the site. The preferred outlet location is the 525mm storm sewer in the Springfield Road ROW, which appears to be the current stormwater outlet for the project site.

2.2.3 Surface Storage & Overland Flow

- Building openings are to be a minimum of 0.15m above the 100-year water level (City of Ottawa).
- Maximum depth of flow under either static or dynamic conditions shall be less than 0.35m (City of Ottawa)
- Balance of flows exceeding the allowable release rate up to and including the 100-year storm event to be detained on-site (City of Ottawa).
- Provide adequate emergency overflow conveyance off-site for events beyond the 100-year storm (City of Ottawa)
- Where possible, major flow from the site is to be safely conveyed by surface routing towards the municipal ROWs.

2.3 Background

The existing internal stormwater management and servicing system is established in the Stormwater Management and Site Servicing Report, prepared by R.V. Anderson Associated Ltd. (June 2013). The existing system includes several components.

1. For the north portion of the site, internal storm sewers direct roof and yard drainage to an existing underground infiltration system located beneath the existing sports field. This existing system does not have an outlet (all runoff is infiltrated).

2. On the west side of the site, an existing gravel parking area drains to the west to two catch basins series that outlet to the existing 375mm diameter storm sewer in the Springfield Road ROW.

3. The existing grass sports field drains from east to west, with most of the site draining to the gravel parking area and the Springfield Road ROW.

4. The existing western buildings have building storm services to Springfield Road while the eastern buildings have building storm services to Glenwood Avenue.

Some of the existing buildings have peaked roofs and rear yard areas that drain internally into the site. A portion of the existing east building expansion roof drainage is serviced internally within the site to the existing infiltration system. The internally draining areas and existing storm service connection will need to be accommodated in the new site stormwater system. The existing drainage conditions are shown on **Drawing C101.**

2.4 Analysis

The impacted areas of the site were identified by considering the existing drainage areas affected by the sports field resurfacing, new storm sewers, and new stormwater management system. The impacted areas were delineated utilizing the information from the R.V. Anderson 2013 report and the current topographic survey. The impacted areas delineated the existing drainage area (subcatchment EX-1 and EX-2) as shown in the existing storm drainage plan on **Drawing C101.** The existing (pre-development) runoff coefficient for the site was determined to be C=0.40. Since this value is less than 0.5, the analysis proceeded based on the 5-year pre-development runoff coefficient of 0.40.

The impacted area was subdivided into drainage areas (subcatchments) tributary to the new stormwater management system and outlet, as shown on **Drawing C130**. Runoff coefficient values were assigned to each drainage area based on the relative proportion the proposed finished surfaces and imperviousness of each surface. A summary of subareas and runoff coefficients is provided in **Appendix A.1.** The storm drainage areas were subdivided utilizing the information from the R.V. Anderson 2013 report, the current topographic survey, and the proposed site grading plan, **Drawing C120.**

The stormwater management (SWM) design methodology for the site required a dynamic stormwater model to better represent the interdependent hydraulic grade line throughout the proposed storm sewer system and onsite storage systems. This work includes:

- Create a PCSWMM model that generates major and minor system hydrographs and assesses the minor system hydraulic grade line and the major system flow depths.
- Size inlet control devices for the proposed catch basins to avoid surface ponding during the 2-year storm while meeting the required 0.3 m 100-year HGL to USF clearance.
- Ensure that total dynamic and static surface ponding depths do not exceed 0.35 m during the 100-year storm scenario.
- Confirm that climate change storm simulation does not result in flooding.

2.4.1 Design Methodology

The site is designed using the “dual drainage” principle, whereby the minor (pipe) system is designed to convey the peak rate of runoff from the 2-year design storm and runoff from larger events is conveyed by both minor (pipe) and major (overland) channels, such as walkways and surface swales, safely to the appropriate outlet without impacting proposed or existing downstream properties.

2.4.2 Existing Conditions

The 5-year event discharge under pre-development conditions was determined for the site with a maximum discharge coefficient C of 0.40. Due to the numerous existing stormwater outlets and short pipe runs, the pre-development time of concentration for the site was determined to be 21.6 minutes using a combination of the Airport Method and Uplands method (refer to **Appendix A.2**); hence a time of

concentration of 21.6 minutes has been used for the site, as per the City of Ottawa SDG. Peak stormwater flow rates have been calculated using the rational method as follows:

Q = 2.78 CiA
Where: Q = peak flow rate, L/s
A = drainage area, ha
I = rainfall intensity, mm/hr (per Ottawa IDF curves)
C = site runoff coefficient

The 5-year pre-development rainfall event with a total site area of 2.41 ha, C-value of 0.40, and a time of concentration of 21.6 minutes was determined by the rational method to be **178.5 L/s.**

Further consultation with the City of Ottawa staff determined that the site release rate will need to match the existing conditions as determined by the restricted outflow to the minor system through the existing onsite catch basin, located in the grass between the two gravel parking areas. A field investigation was conducted on October 26, 2026, to measure-down to the invert of the existing outgoing lead, to measure the size of the outgoing lead, and confirm the direction of the outgoing lead (to clarify whether it connects to the Springfield Road storm sewer). The following observations were made during the site visit. Photos from the site visit are included in **Figure 2.1.**

- the invert of the outgoing lead was approximately 0.65m below the surface (±68.84m)
- the size of the outgoing lead was 150mm diameter PVC pipe
- the outgoing lead appeared to be draining to the west, but the connection could not be observed in the Springfield Road storm manhole #65207. It is assumed that the lead connects upstream of the existing manhole, to the 375mm diameter storm sewer. The connection was confirmed by CCTV camera inspection on November 14, 2026. The Clean Water Works (CWW) report of the inspection is provided in **Appendix A.9**
- this catch basin is a round structure (CBMH) with an incoming 150mm diameter lead draining from the southeast (invert elevation ±68.86m)
- the upstream lead was assumed to connect to an existing catch basin located in the asphalt parking area just south of the gravel parking area. This CB may have been missed during the initial topographic survey due to being covered by a parked vehicle, but it can be seen in the available aerial imagery (see **Figure 2.2**). No regrading or changes are proposed within this asphalt parking area, and the CB will continue to drain northwest into the CBMH.

The existing storm drainage plan **Drawing C101** has been updated accordingly. The existing topographic survey was reviewed, and the existing spill elevation of the gravel parking area was identified as 69.84m.



Figure 2.1: Photos of Existing Outlet Catch Basin

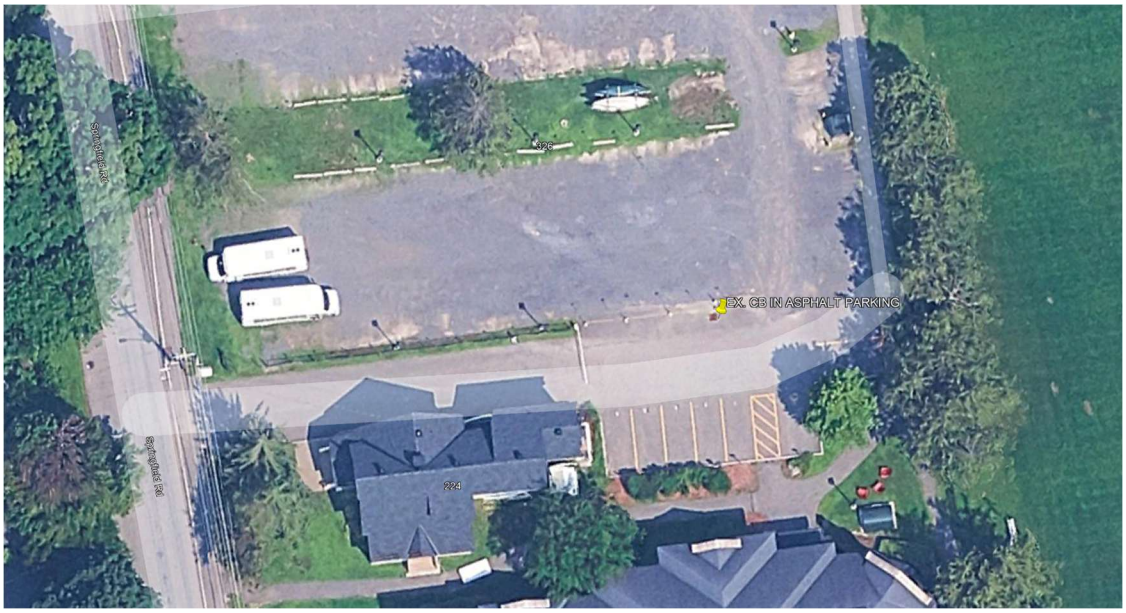

Figure 2.2: Second Existing Catch Basin Identified in the Asphalt Parking Area

2.4.3 Allowable Release Rate

Considering the new information for the existing outlet conditions, the existing release rate to the minor system from the catch basin lead was determined using the orifice equation with the following assumptions:

- CB outflow is restricted by the outgoing pipe diameter (150mm), which acts as a circular orifice.
- Maximum ponding over the CB is achieved during the peak minor system outflow (69.84m Spill Elevation – Rim Elevation 69.49m = 0.35m).
- Only the existing subcatchment area EX-2 is considered in the analysis of the outflow conditions, since the subcatchment area EX-1 is currently infiltrated.
- The time of concentration of 21.6 minutes is applied.
- The existing runoff coefficient of subcatchment EX-2 0.38 is applied.
- The hydraulic grade line in the receiving sewer assumes a fully flowing outlet pipe from STMH 65207 (67.447m + 0.525m diameter = 67.972m).
- Peak stormwater flow rates have been calculated using the orifice equation as follows:

  $Q = C_d A(2gh)^{0.5}$
  Where:
  Q = peak flow rate, L/s
  C_d= discharge coefficient
  A = orifice area, m^2
  g = gravitational acceleration (m/s^2)
  h = pressure head (m) above the center of the orifice

The existing worst-case conditions with surface ponding surcharging the catch basin to the spill elevation, the outlet pipe acting as a circular orifice, and the orifice equation was used to determine the allowable release rate to the minor system at a peak flow rate of **45.9 L/s.** Refer to **Appendix A.1** for detailed calculations. Consequently, this is determined to be the target release rate for the site, under all rainfall events up to and including the 100-year event.

2.4.4 Uncontrolled Catchments

The impacted areas assessed in this study are all tributary to the proposed internal storm sewer system, storage chamber, and restricted storm sewer outlet. Consequently, there are no uncontrolled catchments considered.

2.4.5 Storage Requirements

The site requires quantity control measures and quality control measures to meet the restrictive stormwater criteria. It is proposed that a sealed subsurface storage chamber, located under the west gravel parking area, is to provide end-of-pipe quantity control through detention storage with restricted

outflow to reduce site peak outflow to the 45.9L/s target rate. Additional detention storage is achieved in the granular layers beneath the synthetic turf field.

2.4.6 SWMM Dual Drainage Methodology

The proposed development is modeled in the PCSWMM modeling program as a dual conduit system. Since the major overland flow routes on this site do not follow a roadway layout, but rather pathways, drainage swales, and overland flow, the dual drainage system is somewhat simplified, and includes the following components:

1. circular conduits representing the sewers and storage nodes representing manholes, catch basins, the stormwater chamber, and the granular storage beneath the synthetic field.

2. trapezoidal conduits with wide cross-sections to represent uninhibited overland flow between storage nodes.

Orifice link objects from surface storage nodes (i.e. CBs) to subsurface storage nodes (i.e. MH) represent catch basin leads and may be sized to represent a restriction from a vertical circular orifice. Subcatchments are linked to the storage nodes on the surface so that generated hydrographs are directed there first.

Storage nodes are used in the model to represent catch basins as well as major system junctions. For storage nodes representing catch basins (CBs), the invert of the storage node represents the invert of the control orifice for the CB, and the rim of the storage node represents the top of grate elevation plus allowable flow depth on the segment. For the purpose of this SWM plan, an additional artificial depth has been added to rim elevations to allow for overland flow routing from one surface storage to the next.

Stage-storage curves have been developed for the principal storage nodes based on the proposed grading surface, spill elevations, and available storage volumes. The stage-storage curve is developed using small increments of ponding/storage depth and the end-area method, as utilized within PCSWMM. Refer to **Appendix A.8** for the stage-storage curves.

1. For the stormwater chamber, the total storage capacity and internal height of the subsurface chamber, 601m^3 and 1.295m, respectively, were provided by the manufacturer for the StormTrap design. This was utilized (assuming relatively uniform storage area) to develop the stage-storage curve to the inside top of chamber. Above the chamber, the area is reduced to the barrel area of the CB_TANK catch basin until the rim elevation. Then, the ponded area is approximated based on a conical surface storage depression up to the total ponded area and spill elevation.

2. For the field's subsurface granular storage, the total storage capacity was assumed to include the void space (0.3) of the minimum 300mm thick 'Granular O' layer per OPSS 1010 shown in **Detail 1- Drawing L601** of the landscape drawing set and shown in or **Figure 2.3**. The following assumptions were also made for the field granular storage:

- Outflow rate to the minor system from the FIELD 1 subcatchment may be limited to the 300 mm diameter storm sewer outlet from the field sub surface drainage system, hence this connection is represented as an orifice.
- The vertical hydraulic conductivity of the synthetic turf and shock pad does not inhibit the percolation of the incident rainfall.
- Surface runoff outletting the FIELD 1 subcatchment was negligible due to the perimeter curb around the synthetic field.
- The porosity of the Granular O was assumed to be 0.30, as per the recommendations under *Sustainable Technologies Evaluation Program*, Dec 2023*,* and *OPSS.PROV 1010*.
- The volume of storage available in the subdrainage pipes and the clearstone embedment was neglected in the available storage volume.
- The slope of the field subcatchment was assumed to be 1% based on the subgrade slope indicated in **Detail 1- Drawing L601.**

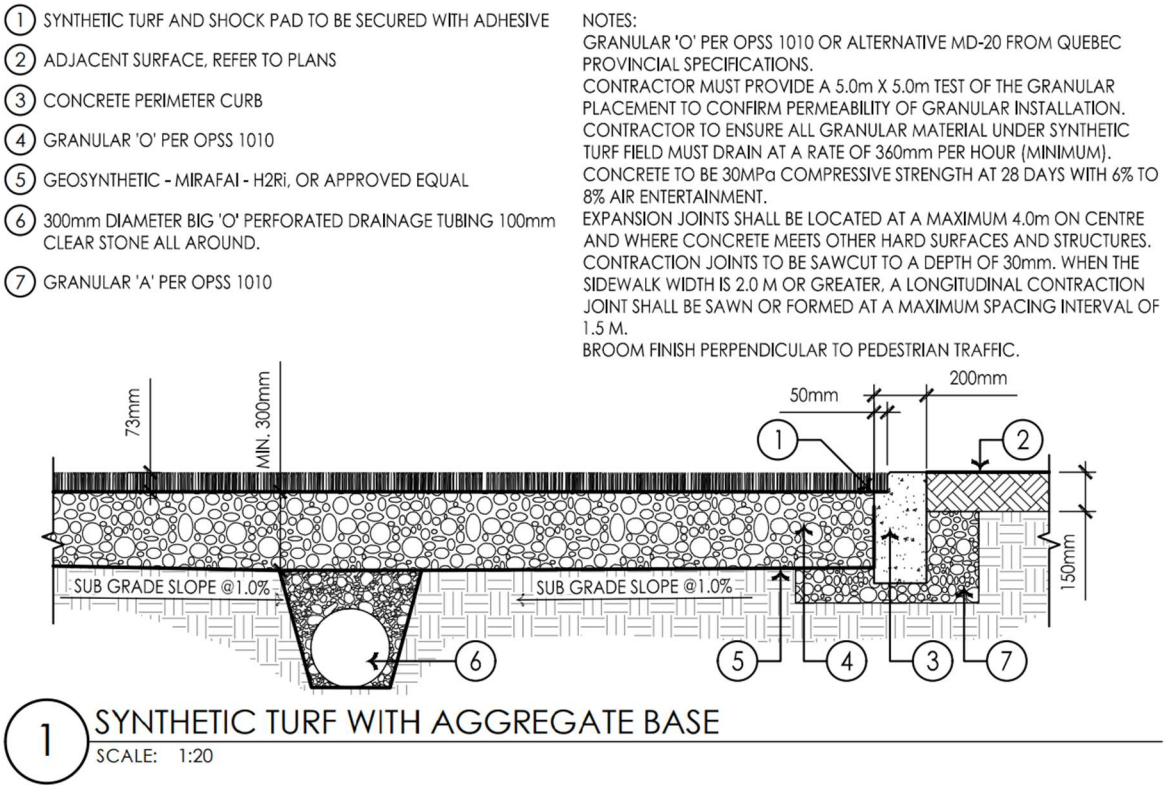

Figure 2.3: Excerpt from Drawing L601 - Detail 1

2.4.7 Design Storms

The 3-hour Chicago distribution was selected to estimate the 2-year capture rates for the proposed subcatchments, and to assess the 100-year HGL across the proposed development.

To ‘stress test’ the system a ‘climate change’ scenario was created by adding 20% of the individual intensity values of the 100-year storm at their specified time step.

2.4.8 Modeling Parameters

Table 2.1 presents the general subcatchment parameters used and **Table 2.2** presents the individual parameters that vary for each of the subcatchments tributary to the storm outlet.

Table 2.1: General Subcatchment Parameters

Subcatchment Parameter	Value
Infiltration Method	Horton
Max. Infil. Rate (mm/hr)	76.2
Min. Infil. Rate (mm/hr)	13.2
Decay Constant (1/hr)	4.14
N Imperv	0.013
N Perv	0.25
Dstore Imperv (mm)	1.57
Dstore Perv (mm)	4.67

Table 2.2: Subcatchment Parameters

Area ID	Area (ha)	Width (m)	Slope (%)	% Impervious
FIELD_1	1.20	269.5	1.0	78
L102A	0.30	68.5	2.0	64
L104A	0.32	73.1	2.0	65
L4A	0.12	27.3	2.0	47
L4B	0.33	74.1	2.0	34
L4C	0.06	14.5	1.0	95
L4D	0.07	16.3	2.0	53

2.4.9 Hydraulic Parameters

As per the City of Ottawa Sewer Design Guidelines, 2012, Manning’s roughness values of 0.013 were used for sewer modeling and overland flow corridors representing roadways.

Storm sewers were modeled to confirm flow capacities, assess hydraulic grade lines (HGLs) and to determine minor system peak outflows to the outlet. The detailed storm sewer design sheet is included in **Appendix A.6**. Exit losses at manholes were set for all pipe segments based on the flow angle through the structure. Exit losses were assigned as per City guidelines (Appendix 6b), see **Table 2.3**.

Table 2.3: Exit Loss Coefficients for Bends at Manholes

Degrees	Coefficient
11	0.060
22	0.140
30	0.210
45	0.390
60	0.640
90	1.320
180	0.020

Table 2.4 presents the parameters for the outlet and orifice link objects in the model, which represent ICDs. All IPEX tempest orifices were assigned a discharge coefficient of 0.572. It should be noted that the proposed ICDs will consist of slide type vertical circular orifices. A coefficient of 0.572 was applied when using orifices to conform to head/discharge curves as supplied by the manufacturer for IPEX Tempest HF model ICDs.

Table 2.4: Orifice Parameters for Proposed Catchments

Orifice Name	Structure ID	Tributary Area ID	Discharge Coefficient
OR1	STM 101A	L4A-L4D, L102A, L104A, Field 1	0.572
OR2	CB 4B	L4D	0.572

2.4.10 Boundary Conditions

The detailed PCSWMM hydrology and the proposed storm sewers were used to assess the peak inflows and hydraulic grade line (HGL) in the proposed site. Fixed boundary conditions in the form of backwater elevations were modeled as per the existing conditions in the Springfield Road Sewer, assuming a fully flowing outlet pipe from the proposed storm manhole 100 (97.935m HGL). Consequently, the outfall 100_(C-STRM) in PCSWMM, was evaluated at a fixed elevation of 97.935m HGL and upstream manholes were evaluated with an equivalent initial depth to avoid modelling backflow into the site.

2.5 Modeling Results and Discussion

The following sections summarize the key hydrologic and hydraulic model results. For detailed model results or inputs please refer to the electronic model files or refer to **Appendix A.7.**

2.5.1 Proposed Inlet Control Devices

Table 2.5 summarizes the orifice link maximum flow rates and heads across the proposed development.

Table 2.5: Proposed Orifice Link Results

Orifice Name	Structure ID	ICD Type	ICD Size	2yr Head (m)	2yr Flow (L/s)	100yr Head (m)	100yr Flow (L/s)
OR1	STM 101A	HF Circular Orifice	127 mm Ø	1.09	26.3	2.30	44.0
OR2	CB 4B	HF Circular Orifice	98 mm Ø	0.23	8.2	1.70	22.0

2.5.2 Proposed Development Hydraulic Grade Line Analysis

The 100-year hydraulic grade line (HGL) elevation across the site was estimated using the PCSWMM model for the worst-case HGL using the 3-hour Chicago storm for the 100-year runoff.

The climate change scenario was assessed using the 100-year runoff intensities (worst-case HGL) increased by 20%. **Table 2.6** presents the clearance between the proposed storm sewer worst case HGL and the nearest building storm service connection. The only building with a storm service connection tied-into the proposed storm sewer network is the existing east building (located to the northeast of the field). The invert of the storm service to this building is at an elevation of 69.88m, as indicated on **Drawing C101**. The 250 mm diameter service obvert is at an elevation of 70.13m.

Table 2.6: Worst Case Hydraulic Grade Line Results

STRUCTURE ID	OBV (m)	100-Year, 3hr Chicago Storm		100-year+20%, 3hr Chicago Storm	
		HGL (m)	Clearance (m)	HGL (m)	Clearance (m)
EX. CBMH 4	70.13	69.96	0.17	70.11	0.02

The model results indicate that the worst-case HGL does not exceed the obvert elevation of the building storm service, and the service is not surcharged. Detailed grading of the site has been completed to ensure that the maximum hydraulic grade line is managed throughout the site during the worst case 100-year storm event, and no flooding is observed during the 'climate change' event.

2.5.3 Overland Flow

Table 2.7 presents the maximum total surface water depths (static ponding depth + dynamic flow) above the top-of-grate of the proposed catch basins for the 100-year, 3-hr Chicago storm and the 'climate change' storm. Based on the model results, the total ponding depth (static + dynamic) does not exceed the required 0.35 m maximum during the 100-year event.

Table 2.7: Proposed Maximum Static and Dynamic Surface Water Depths

Storage Node ID	Structure ID	Top of Grate Elevation (m)	100-year, 3-hour Chicago		100-year, 3-hour Chicago+20%	
			Max HGL (m)	Total Surface Water Depth (m)	Max HGL (m)	Total Surface Water Depth (m)
FIELD GRANULARS	N/A	70.10	69.86	-	69.92	-
STORMTRAP	CB TANK	69.61	69.82	0.21	69.86	0.25
4B_(C-STRM)	CB 4B	71.40	71.72	0.32	71.72	0.32

2.5.4 Quantity Control Results

The following section summarizes the key hydrologic and hydraulic model results for the proposed site. For detailed model results or inputs please refer to the example files in **Appendix A.7** and the electronic model files. Minor system flows are identified from the outfall 100_(C-STRM), which represents the manhole structure STM 100 and major system flows include all uncontrolled runoff and overflow conveyance to Springfield Road.

Table 2.8: Target and Resultant Major and Minor System Release Rates

Storm Event	Minor System (L/s)	Major System (L/s)	Total Proposed (L/s)	Total Allowable (L/s)
2-year, 3-hour Chicago	26.3	0	26.3	45.9
100-year, 3-hour Chicago	44.0	0	44.0	45.9
100-year, 3-hour Chicago+20%	44.5	36.3	80.8	-

A summary of the discharge and storage requirements are provided in **Table 2.9**.

Table 2.9: 100-year Release Rate and Quantity Control Summary

Storage Mechanism	Contributing Area IDs	Tributary Area (ha)	Design Head (m)	HWL Elevation (m)	Discharge (L/s)	$V_{required}$ (m^3)	$V_{available}$ (m^3)
Subsurface Granular	Field 1	1.20	0.53	69.86	112.0	350	808
Subsurface Chamber	L4A-L4D, L102A, L104A, Field 1	2.41	2.26	69.82	44.0	757	601
Surface Ponding-Gravel Parking Area	L4A-L4D, L102A, L104A, Field 1	2.41	2.26	69.82	-	156	219

The end-of-pipe stormwater detention storage is to be provided by a sealed subsurface chamber which is engineered to prevent floatation given the seasonal high water levels (69.26 m measured in Spring 2026). An example product, a StormTrap SingleTrap design has been specified for this purpose. Refer to **Appendix A.3** for the SingleTrap details and as summarized in **Table 2.10.**

Table 2.10: Preliminary Design for StormTrap SingleTrap Chamber System

Inside Bottom (Invert) Elevation of Chamber (m)	Inside Top Elevation of Chamber (m)	Inside Height of Chamber (m)	Chamber Footprint Area (m^2)	Total Storage Volume (m^3)	Allowable Maximum Finished Grade (m)	Allowable Minimum Finished Grade (m)
67.56	68.86	1.295	464	601.17	69.85	69.61

As per the modelling results shown in **Table 2.8 and Table 2.9**, the proposed SingleTrap stormwater chamber and the outlet restriction in manhole 101A provides sufficient storage to meet the site's pre-development target outflow rate.

2.5.4.1 Quality Control

Quality control is required on this site due to the potential contaminants associated with the west gravel surface parking areas and the particulates associated with the proposed synthetic turf field.

The proposed synthetic turf system will utilize TrueBlend infill, which does not contain crumb rubber. The infill is composed of a sand base layer topped with an engineered, fused blend of natural cork and premium elastomers. Because the components are combined into a single material rather than loose fractions, the system significantly reduces the potential for infill migration and microplastic transport when compared to conventional Styrene-Butadiene Rubber (SBR) systems, while still meeting all required performance and safety criteria. The field also has a perimeter curb which limits overland flow from the field surface.

On this site, quality control is achieved by two mechanisms:

1. By filtration through the synthetic field, shock pad, and subsurface granular materials.
2. Using an oil-grit-separator (OGS) unit located downstream of the subsurface chamber.

The overall site runoff coefficient was determined to be 0.67 in the area summary sheet included in **Appendix A.1.** The corresponding imperviousness of the site was estimated to be 0.85 (or 85%). Per the pre-consultation feedback, the City requires enhanced (80%) TSS removal for this site due to the proximity of the Ottawa River.

An oil-grit separator (OGS) has been designed to provide quality treatment for the minor system flows on this site. A stormceptor EF08 model has been sized as an example product, as specified in **Appendix A.5.** The OGS is to be located on the downstream end of the storm sewer system at the property line as shown in **Drawing C110** and **C130,** which will contribute to the overall treatment train and allow for an easily accessible and maintainable structure for solids removals. A long term TSS removal of 85% is anticipated from the OGS unit.

Ideally, this OGS unit would be located upstream of the subsurface chamber to provide pre-treatment benefits, but this was not feasible due to the surcharge and hydraulic grade lines through the proposed storm sewer system upstream of the chamber. Consequently, we anticipate some sediment to settle within the storage chamber, which will require routine cleaning and maintenance for solids removal.

2.5.5 LID Design Considerations

LID measures were considered for both quantity and quality control on this site. The MECP SWM Planning Design Manual (2003) and the City of Ottawa Draft Low Impact Development Technical Guidance Report (2019) provide design guidance for LIDs and physical constraints for SWMP types. For an infiltration basin/gallery, these considerations include:

- Drainage Area: <5ha

- Minimum soil percolation rate: loam (infiltration rate ≥60 mm/hr)
- Bedrock: situated ≥1.0m below the bottom of the infiltration bed
- Groundwater: situated ≥1.0m below the bottom of the infiltration bed

The Ashbury College synthetic turf field site has previously been shown to meet both the drainage area and minimum soil percolation rate criteria for an infiltration gallery. Bedrock and groundwater levels have been established in the Geotechnical Investigation Report (Stantec, 2024) and the proceeding groundwater monitoring program, which began in 2025 and continues through the 2026 season.

The south side of the proposed synthetic turf field was found to have feasible bedrock elevations for an LID facility. However, the seasonal groundwater elevation was too high to feasibly situate an LID facility. Due to the proposed storm sewer arrangement in combination with limited unused surface area for infiltration and the high seasonal groundwater level, the proposed design does not materially consider significant infiltration potential.

The sealed StormTrap chamber was substituted for stormwater quantity management and the OGS system introduced for stormwater quality management.

2.6 Stormwater Servicing

As shown in **Drawings C130 and C110** and detailed in the storm sewer design sheet in **Appendix A.5**, the proposed site will be serviced by a network of gravity storm sewers which will convey the 2-year stormwater flows from the impacted site drainage areas to the subsurface chamber at the west gravel parking lot area. Several new catch basins, leads, and one new catch basin manhole are proposed to collect drainage from the site's overland flow areas and convey the stormwater to the main storm sewers and stormwater management facility (SWMF). The subsurface storage chamber shall be waterproofed to avoid intrusion of seasonally high groundwater levels onsite. Structural considerations for the chamber against groundwater floatation/uplift have been provided by the manufacturer. Refer to the notes in **Appendix A.3**.

The stormwater management design includes inlet control devices (ICD)s on some catchbasins to utilize available surface storage up to maximum ponding depths of 0.3m. An ICD is also proposed in the manhole STM 101A to restrict the outflow from the subsurface storage chamber.

The minor storm sewer system includes a stub for the field subdrain outlet, allowing for connection/outlet of the subsurface drainage system of the proposed synthetic turf field. Design of the subsurface drainage for the field is included in the Landscape Drawing set.

The subsurface chamber outlets through a 525mm diameter storm sewer to a new (1200mm diameter) storm manhole with the ICD on the outgoing invert for outflow restriction. Downstream of the ICD is the new OGS unit at the property line which will also serve as a storm monitoring manhole for the site. The system outlet will connect to a new (1500mm diameter) manhole on the 525mm diameter municipal storm sewer in the Springfield Road ROW.

3 Grading and Drainage

The impacted site drainage area measures approximately 2.41ha. The topography across the site is a gradual slope draining principally from east to west, with a difference in elevation approaching 1.4m. A detailed grading plan (see **Drawing C120**) has been provided to satisfy the stormwater management requirements, adhere to the geotechnical recommendations (see **Section 4**) for the site, and provide for minimum cover requirements for storm sewers and infiltration gallery chambers, where possible. Site grading has been established to provide emergency overland flow routes required for stormwater management in accordance with City of Ottawa requirements.

The subject site maintains emergency overland flow routes for flows deriving from storm events exceeding the 100-year rainfall. The emergency overland flow routes drain toward the west, and spill through the gravel parking areas into the Springfield Road municipal ROW. Static ponding areas, volumes, depths, and spill elevations are delineated in **Drawing C130.**

Terracing and a 600mm high rock retaining wall is proposed along the north side of the field to facilitate the approximately 2.0m grade change from the sports field and pathways to the higher elevations north of the field. See the landscape plans for retaining wall details. Stairs and an accessible ramp structure are proposed at the northwest corner of the field to accommodate pedestrian connections to the existing residence building to the northwest. Proposed grading within the proposed synthetic turf field cuts into the exiting subsurface infiltration system hence, it has been identified for removal, and a new SWM facility is proposed.

4 Geotechnical Considerations

A Geotechnical Investigation Report was prepared by Stantec and dated May 2024. The report summarizes the existing soil conditions within the re-development areas and provides construction recommendations. For details which are not summarized below, please see the original report.

Subsurface soil conditions within the subject area were determined from 16 boreholes and six (6) test pits (for infiltration testing) distributed across the development for the 2024 investigation, and four (4) additional boreholes in 2025 for the installation of groundwater monitoring wells. In general, soil stratigraphy consisted of topsoil underlain by fill varying from silty sand to sandy silt, followed by glacial till consisting of silty sandy gravel to sandy silt with gravel over bedrock. Bedrock/inferred bedrock elevations range from depths of 1.0 to 5.6m below ground surface**.**

Additional geotechnical information will be required in the gravel parking area to confirm bedrock elevations and seasonal high ground water levels to finalize the StormTrap design against floatation prior to construction. Test pits and the installation of a groundwater monitoring well are recommended in early 2027.

The geotechnical report recommends a grade raise restriction of 1.0m for this site. In the case that greater grade raises are contemplated, additional geotechnical input should be provided.

The report provides direction for the proposed rock retaining wall, pipe bedding and backfill requirements for underground services and recommendations for rock removal were also identified for the subject site.

The asphalt pavement structure for site access roads, parking areas, paved pathways, light traffic and occasional garbage or service trucks is outlined in the Geotechnical Investigation Report and in **Drawing C110**.

5 Utilities

As the subject site is bound to the north, east, and west by existing institutional buildings, and by a municipal right-of-way to the south, Hydro, Bell, Gas and Cable servicing for the proposed development should be readily available, if needed. Pole mounted infrastructure may exist along the southern property line and may need to be relocated during construction. It is anticipated that existing infrastructure will be sufficient to provide a means of distribution for the proposed field re-development. Exact size, location and routing of utilities will be finalized after design circulation. Utilities will be coordinated between disciplines to resolve potential conflicts. The Site Utility Plan is included on **Drawing C110.**

6 Erosion and Sediment Control During Construction

To protect downstream water quality and prevent sediment build-up in catch basins and storm sewers, erosion and sediment control (ESC) measures must be implemented by the Contractor prior to commencing construction. The Contractor will need to monitor, repair, maintain or replace the ESC measures as needed during construction. The following recommendations will be included in the contract documents and communicated to the Contractor.

1. Implement best management practices to provide appropriate protection of the existing and proposed drainage system and the receiving water course(s).
2. Limit the extent of the exposed soils at any given time.
3. Re-vegetate exposed areas as soon as possible.
4. Minimize the area to be cleared and grubbed.
5. Protect exposed slopes with geotextiles, geogrid, or synthetic mulches.
6. Install silt barriers/fencing around the perimeter of the site as indicated in **Drawing C102** to prevent the migration of sediment offsite.
7. Install trackout control mats (mud mats) at the entrance/egress to prevent migration of sediment into the public ROW.
8. Provide sediment traps and basins during dewatering works.
9. Install sediment traps (such as SiltSack® by Terrafix) between catch basins and frames.
10. Schedule the construction works at times which avoid flooding due to seasonal rains.

The Contractor will also be required to complete inspections and guarantee the proper performance of their erosion and sediment control measures at least after every rainfall. The inspections are to include:

- Verification that water is not flowing under silt barriers.
- Cleaning and changing the sediment traps placed on catch basins.

Refer to **Drawing C102** for the proposed Erosion and Sediment Control Concept Plan for the location of silt fences, sediment traps, and other erosion control measures for the onsite works.

7 Approvals

Environmental Compliance Approvals (ECAs), formerly Certificates of Approval (CofA), under the Ontario Water Resources Act are not expected to be a requirement for this development as there are no proposed industrial site uses, and site stormwater discharges are routed from the privately owned site and SWM facility to a municipal storm sewer that is legal outlet registered under the City of Ottawa's CLI ECA. Existing downstream sewers have demonstrated adequate capacity to receive the 5-year pre-development peak release rate from the site.

For ground or surface water volumes being pumped during the construction phase, typically between 50,000 to 400,000 L/day, it is required to register on the Environmental Activity and Sector Registry (EASR). Given the variable groundwater monitoring data, it is possible that groundwater may be encountered in excavations on this site. A minimum of two to four weeks should be allotted for completion of the EASR registration and the preparation of the Water Taking and Discharge Plan by a Qualified Person as stipulated under O.Reg. 63/16. An MECP Permit to Take Water (PTTW), which is required for dewatering volumes exceeding 400,000L/day, is not anticipated for the site.

8 Conclusions

The report assessed servicing conditions within and immediately adjacent to the project site and evaluated the feasibility of a new subsurface stormwater chamber for quantity management and OGS unit for quality management of stormwater. Other SPC design requirements appeared in this report including:

- LID considerations and evaluation,
- grading and drainage,
- geotechnical considerations,
- utilities,
- erosion and sediment control during construction, and
- approvals.

We trust that the information and the proposed stormwater management and servicing strategies presented in this report are adequate to support the Site Plan Control application for this re-development. Please contact the author or engineer of record of this report if you have any questions or concerns.

Appendix A Stormwater Management

A.1 Existing Conditions - Rational Method Calculations

Stormwater Management Calculations

File No: **116501019**
Project: **Ashbury College - Synthetic Turf Field**
Date: **23-Jun-26**

SWM Approach:
Post-development to Pre-development flows

Pre-Development Site Conditions:

Overall Runoff Coefficient for Pre-Development Site and Sub-Catchment Areas

Runoff Coefficient Table

Catchment Type	Sub-catchment Area ID / Description		Area (ha) "A"		Runoff Coefficient "C"	"A x C"		Overall Runoff Coefficient
Controlled - Tributary	Existing Infiltration Gallery (EX-1)	Hard	0.111		0.9	0.100		
		Soft	0.069		0.2	0.014		
		Subtotal		0.18			0.113	0.63
Controlled - Tributary	EX-2	Hard	0.572		0.9	0.515		
		Soft	1.654		0.2	0.331		
		Subtotal		2.23			0.846	0.38
Total				**2.41**			**0.96**	
Overall Runoff Coefficient= C:								**0.40**

Total Tributary Surface Areas (Controlled and Uncontrolled)	**0.18 ha**
Total Tributary Area to Outlet	**0.18 ha**
Total Uncontrolled Areas (Non-Tributary)	**2.23 ha**
Total Site	**2.41 ha**

Stormwater Management Calculations

Project #116501019, Ashbury College - Synthetic Turf Field
Rational Method Calculations

5 yr Intensity
City of Ottawa

$I = a/(t + b)^c$

a =	998.071
b =	6.053
c =	0.814

t (min)	I (mm/hr)
5	141.18
10	104.19
15	83.56
20	70.25
25	60.90
30	53.93
35	48.52
40	44.18
45	40.63
50	37.65
55	35.12
60	32.94

5 YEAR Predevelopment Target Release from Portion of Site

Subdrainage Area: Predevelopment Tributary Area to Outlet
Area (ha): 2.41
C: 0.40

Typical Time of Concentration

tc (min)	I (5 yr) (mm/hr)	Q (5-yr) (L/s)
21.6	66.92	**178.5**

Project #116501019, Ashbury College - Synthetic Turf Field
Rational Method Calculations

100 yr Intensity
City of Ottawa

$I = a/(t + b)^c$

a =	1735.688
b =	6.014
c =	0.820

t (min)	I (mm/hr)
5	242.70
10	178.56
15	142.89
20	119.95
25	103.85
30	91.87
35	82.58
40	75.15
45	69.05
50	63.95
55	59.62
60	55.89

Stormwater Management Calculations

Ashbury College - Synthetic Turf Field
Modified Rational Method Calculations for Existing Conditions

5 yr Intensity
City of Ottawa

$I = a/(t + b)^c$

a =	998.071
b =	6.053
c =	0.814

t (min)	I (mm/hr)
5	141.18
10	104.19
15	83.56
20	70.25
25	60.90
30	53.93
35	48.52
40	44.18
45	40.63
50	37.65
55	35.12
60	32.94

100 yr Intensity
City of Ottawa

$I = a/(t + b)^c$

a =	1735.688
b =	6.014
c =	0.820

t (min)	I (mm/hr)
5	242.70
10	178.56
15	142.89
20	119.95
25	103.85
30	91.87
35	82.58
40	75.15
45	69.05
50	63.95
55	59.62
60	55.89

5 YEAR Predevelopment Target Release from Portion of Site

Subdrainage Area: Predevelopment Tributary Area to Outlet
Area (ha): 2.41
C: 0.40

Typical Time of Concentration

tc (min)	I (5 yr) (mm/hr)	Qtarget (L/s)
21.6	66.92	**45.9**

5 YEAR Modified Rational Method for Existing Springfield Outlet

Subdrainage Area: EX-2 Total Uncontrolled Areas (Non-Tributary)
Area (ha): 2.23
C: 0.38

tc (min)	I (5 yr) (mm/hr)	Qactual (L/s)	Qrelease (L/s)
10	104.19	245.01	45.9
20	70.25	165.20	45.9
30	53.93	126.81	45.9
40	44.18	103.90	45.9
50	37.65	88.54	45.9
60	32.94	77.47	45.9
70	29.37	69.07	45.9
80	26.56	62.46	45.9
90	24.29	57.12	45.9
100	22.41	52.69	45.9
110	20.82	48.96	45.9
120	19.47	45.78	45.8

Storage: Surface Storage Above CB

Orifice Equation: $Q = CdA(2gh)^{0.5}$ Where C = 0.610
Orifice Diameter: 150.0 mm
Invert Elevation: 68.84 m
Orifice Centre Elevation: 68.92 m
T/G Elevation: 69.49 m
Spill Elevation: 69.84 m
Max Ponding Depth: 0.35 m
Downstream W/L: 67.45 m

	Stage	Head (m)	Discharge (L/s)
5-year Water Level	69.84	0.93	**45.9**

100 YEAR Modified Rational Method for Existing Springfield Outlet

Subdrainage Area: EX-2 Total Uncontrolled Areas (Non-Tributary)
Area (ha): 2.23
C: 0.38

tc (min)	I (100 yr) (mm/hr)	Qactual (L/s)	Qrelease (L/s)
10	178.56	419.89	45.9
20	119.95	282.07	45.9
30	91.87	216.03	45.9
40	75.15	176.71	45.9
50	63.95	150.39	45.9
60	55.89	131.44	45.9
70	49.79	117.08	45.9
80	44.99	105.80	45.9
90	41.11	96.67	45.9
100	37.90	89.13	45.9
110	35.20	82.78	45.9
120	32.89	77.35	45.9

Storage: Surface Storage Above CB

Orifice Equation: $Q = CdA(2gh)^{0.5}$ Where C = 0.610
Orifice Diameter: 150.0 mm
Invert Elevation: 68.84 m *From Site Inspection 0.65m below surface.
Orifice Centre Elevation: 68.92 m
T/G Elevation: 69.49 m
Spill Elevation: 69.84 m
Max Ponding Depth: 0.35 m
Downstream W/L: 67.97 m Assume d/s storm pipe is full for d/s HGL

	Stage	Head (m)	Discharge (L/s)
100-year Water Level	69.84	0.93	**45.9**

A.2 Pre-Development Time of Concentration

Project	Ashbury College Synthetic Turf Field	No.	116501019
PRE-DEVELOPMENT CONDITIONS Calculation of Time of Concentration			
Revision:	02	Prepared By:	AG
Revision Date	17-Sep-2026	Checked By:	DT

OVERLAND SHEET FLOW TIME

Runoff Coeffient = 0.20

Length = 111 m (longest overland flow path)
DEM Slope = 2.58% (along overland flow path)

C ≤ 0.4 **Airport Method**

$tc = [3.26 \times (1.1-C) \times L^{0.5}] / S_w^{0.33}$

L	111	m
S_w	2.58%	
C	0.37	
t_c	18.3	min

SHALLOW CONCENTRATED FLOW TIME

Uplands Method

1. Channel Segment 1 - Overland along edge of gravel parking

Length = 42 m (longest flow path)
DEM Slope 1.32% (along overland flow path)
Channel Type = Nearly bare and untilled (overland flow) or alluvial fans in Western mountain regions
k = 3
V = k * S^(1/2)
Velocity = 0.34 m/s
Channel Length = 42 m
Travel time = 2.0 min

2. Channel Segment 2 - Overland grass to CB

Length = 7 m (longest flow path)
DEM Slope 0.28% (along overland flow path)
Channel Type = Short grass pasture (overland flow)
k = 2.3
V = k * S^(1/2)
Velocity = 0.12 m/s
Channel Length = 7 m
Travel time = 1.0 min

Existing CB Lead

Mannings Flow

1. Pipe Segment: CB Lead to Main

Length = 20 m (longest flow path)
Assumed Pipe Slope = 1.00 %
Assumed Pipe Material = PVC
Assumed Pipe Size = 250 mm
Assumed Pipe Shape = circular
Qcap = 59.2 m^3/s
Manning's n = 0.013
V = k * S^(1/2)
Velocity (full) = 1.21 m/s
Pipe Length = 20 m
Travel time = 0.3 min

Actual Pipe Size = 251.5 mm
Area = 0.049 m^2
Hyd. Radius = 0.062 m

Therefore, Total T_c =	**21.6**	min
	0.4	hrs

Uplands Method Chart

118 STEEL DRAINAGE AND HIGHWAY CONSTRUCTION PRODUCTS

Table 3.9 $V/S^{0.5}$ relationship for various land covers

Land Cover	$V/S^{0.5}$ (m/s)
Forest with heavy ground litter, hay meadow (overland flow)	0.6
Trash fallow or minimum tillage cultivation, contour, strip cropped woodland (overland flow)	1.5
Short grass pasture (overland flow)	2.3
Cultivated, straight row (overland flow)	2.7
Nearly bare and untilled (overland flow) or alluvial fans in Western mountain regions	3.0
Grassed waterway	4.6
Paved areas (sheet flow); small upland gullies	6.1

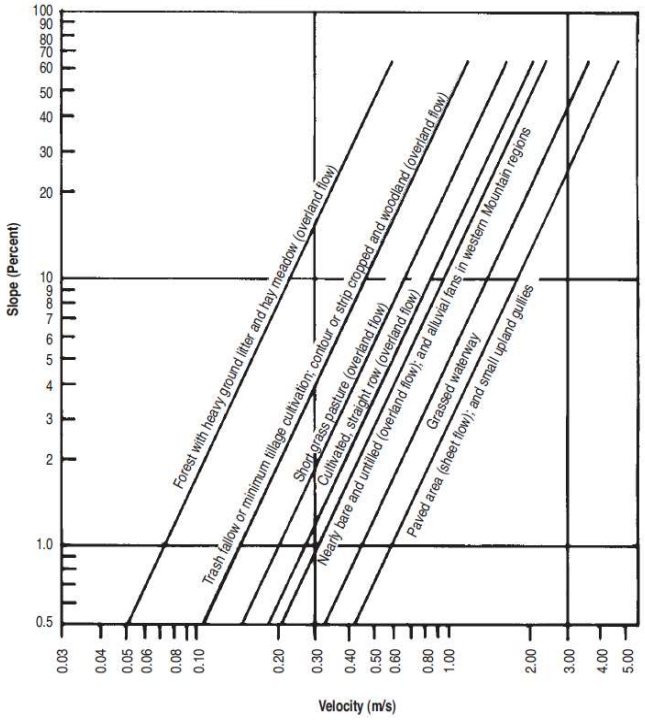

A.3 StormTrap Tank Design

StormTrap®

MODULAR CONCRETE
STORMWATER MANAGEMENT

SHEET INDEX	
PAGE	DESCRIPTION
0.0	COVER SHEET
1.0	GENERAL NOTES
1.1	SINGLETRAP DESIGN CRITERIA
2.0	SINGLETRAP SYSTEM LAYOUT
2.1	SINGLETRAP FOUNDATION LAYOUT
3.0	SINGLETRAP INSTALLATION SPECIFICATION
3.1	SINGLETRAP INSTALLATION SPECIFICATION
4.0	SINGLETRAP BACKFILL SPECIFICATION
5.0	PIPE/ACCESS OPENING SPECIFICATION
6.0	SINGLETRAP MODULE TYPES

THE STORMTRAP DRAWINGS SHALL NOT BE ALTERED OR MANIPULATED IN WHOLE OR IN PART WITHOUT WRITTEN CONSENT OF STORMTRAP. USE OF THESE DRAWINGS IS STRICTLY GRANTED TO YOU, OUR CLIENT, FOR THE SPECIFIED AND NAMED PROJECT ONLY. THESE DRAWINGS ARE FOR YOUR REFERENCE ONLY AND SHALL NOT BE USED FOR MANUFACTURING PURPOSES.

STORMTRAP CONTACT INFORMATION	
STORMTRAP SUPPLIER:	STORMTRAP
CONTACT NAME:	Jonathan Donaldson
CELL PHONE:	(416) 262-6265
SALES EMAIL:	jdonaldson@stormtrap.com

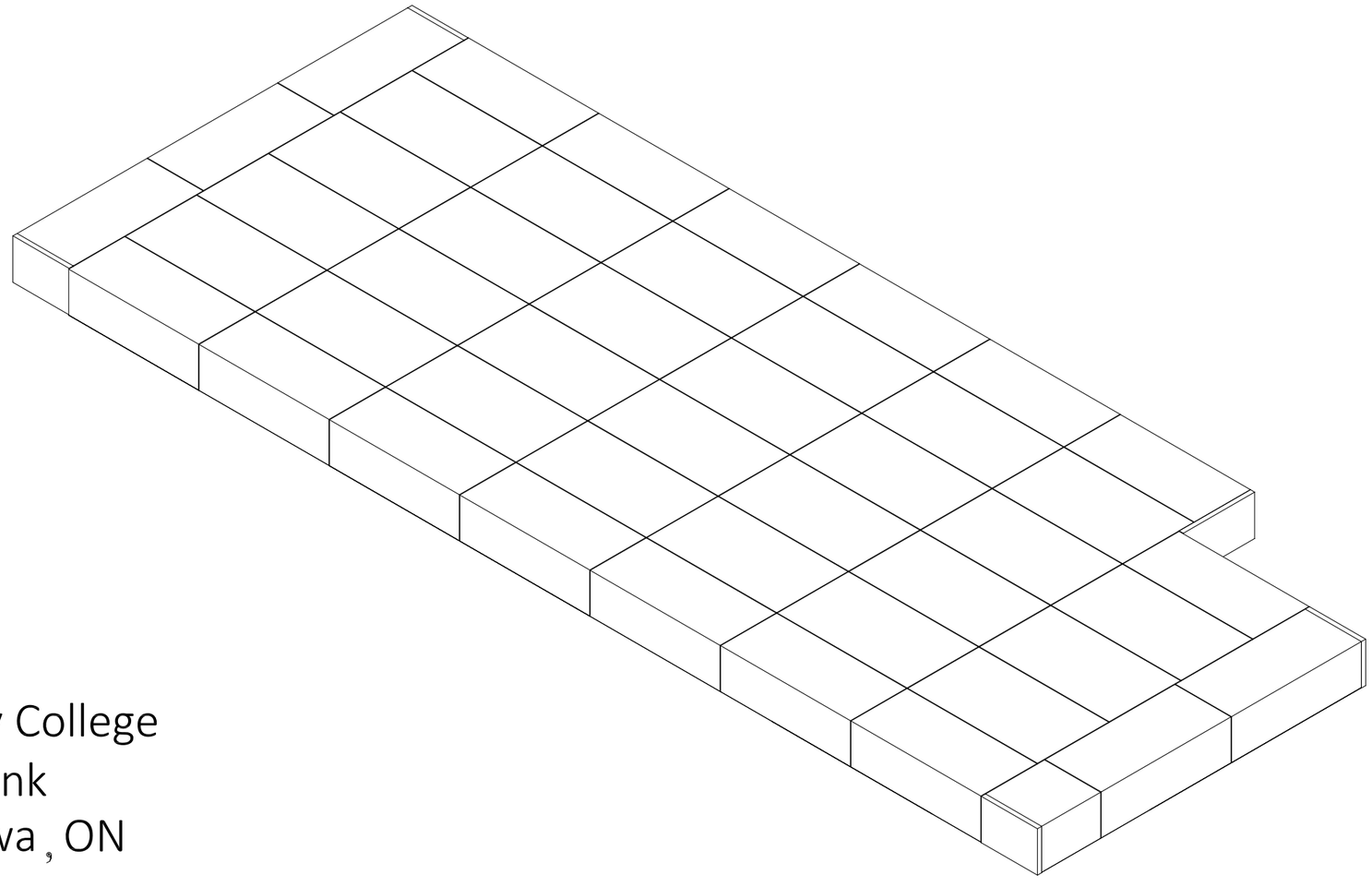

Ashbury College
Tank
Ottawa , ON

StormTrap®
PATENTS LISTED AT: [HTTP://STORMTRAP.COM/PATENT]
1287 WINDHAM PARKWAY
ROMEOVILLE, IL 60446
P:815-941-4549 / F:331-318-5347

ENGINEER INFORMATION:

Stantec
1331 Clyde Avenue
Suite 300
Ottawa, ON
613-722-4420

PROJECT INFORMATION:

Ashbury College

Tank

Ottawa, ON

CURRENT ISSUE DATE:

09/11/2026

ISSUED FOR:

PRELIMINARY

REV.	DATE:	ISSUED FOR:	DWN BY:
1	09/11/20026	PRELIMINARY	LR

SCALE:

NTS

SHEET TITLE:

COVER SHEET

SHEET NUMBER:

0.0

GENERAL NOTES:

1. STRUCTURE PROXIMITY LOADING DISCLAIMER:

STORMTRAP MODULES AND FOUNDATION ARE NOT DESIGNED TO ACCEPT ANY ADDITIONAL LOADING FROM ANY NEARBY STRUCTURES NEXT TO OR OVER THE TOP OF STORMTRAP. EXAMPLES OF NEARBY STRUCTURES MAY INCLUDE BUT ARE NOT LIMITED TO BUILDINGS, FOUNDATION ELEMENTS, RETAINING WALLS, LIGHT POLES, BOLLARDS, SIGNPOSTS, FENCES. ADDITIONALLY, STORMTRAP IS NOT RESPONSIBLE FOR INSTALLATION CONFLICTS ARISING FROM ANY OF THESE NEARBY STRUCTURES. IF ADDITIONAL LOADING CONSIDERATIONS ARE REQUIRED FOR STRUCTURAL DESIGN OF STORMTRAP, PLEASE CONTACT STORMTRAP IMMEDIATELY. FOR LIGHT POLES SHOWN OVER THE TOP OF THE SYSTEM, STORMTRAP WILL PROVIDE A 1.524m LATERAL DISTANCE CAVITY AROUND THE LIGHT POLE TO ACCOMMODATE IT. THE EOR TO TAKE RESPONSIBILITY FOR ENSURING THE LIGHT POLE IS NOT INFLICTING ANY LOADING ON THE STORMTRAP MODULES AND FOUNDATION.

2. TREE LOADING DISCLAIMER:

THE NUMBER OF TREES OR WEIGHT OF TOTAL PLANT MATERIAL PRESENT ON TOP OF A SINGLE STORMTRAP MODULE SHALL NOT EXCEED 16,000 LBS. THE REQUIREMENTS LISTED HERE APPLY AT BOTH THE TIME OF INSTALLATION AND FOR THE LIFE OF THE TREES AND PLANTS IN QUESTION. THE EOR AND LANDSCAPE ARCHITECT ARE RESPONSIBLE FOR ENSURING THAT TREE AND OTHER PLANT ROOTS DO NOT INTERFERE WITH OR COMPROMISE THE FUNCTIONAL AND STRUCTURAL INTEGRITY OF STORMTRAP'S UNDERGROUND MODULES. APPROPRIATE MEASURES SHOULD BE TAKEN TO PREVENT ROOT GROWTH INTO THE STORMTRAP SYSTEM FROM ADJACENT OR OVERHEAD TREES. FURTHERMORE, THE ROOTS OF THE TREES MUST BE CONTAINED TO PREVENT FUTURE DAMAGE TO THE STORMTRAP SYSTEM. STORMTRAP ACCEPTS NO LIABILITY FOR DAMAGES CAUSED BY TREES OR OTHER VEGETATION PLACED AROUND OR ON TOP OF THE SYSTEM.

3. PRE-TREATMENT/SEDIMENT/FILTER CHAMBER DISCLAIMER:

FOR SYSTEMS CONTAINING PRE-TREATMENT, SEDIMENTATION AND/OR FILTER CHAMBERS; IF REQUIRED TO BE SEALED TO PREVENT SAND AND/OR PRE-TREATED WATER FROM MIGRATING INTO ADJOINING MODULES, IT IS THE SOLE RESPONSIBILITY OF THE INSTALLING CONTRACTOR TO ENSURE THAT THOSE MODULES ARE SEALED.

4. OUTLET CONTROL STRUCTURE DISCLAIMER (IF SHOWN ON THESE PLANS):

IF A WATERTIGHT SOLUTION IS REQUIRED FOR AN OUTLET CONTROL STRUCTURE, ALL EXTERIOR COLD JOINTS, INCLUDING JOINT BETWEEN TOP AND BASE MODULES, BETWEEN TOP AND BASE OF ADJOINING SYMONS WALLS, AND JOINTS BETWEEN MODULE AND ADJACENT END PANELS WILL BE THE SOLE RESPONSIBILITY OF THE INSTALLING CONTRACTOR TO PROVIDE AND INSTALL THE WATERTIGHT APPLICATION PER THE EOR'S SPECIFICATION.

StormTrap
PATENTS LISTED AT: [HTTP://STORMTRAP.COM/PATENT]
1287 WINDHAM PARKWAY
ROMEOVILLE, IL 60446
P:815-941-4549 / F:331-318-5347

ENGINEER INFORMATION:

Stantec
1331 Clyde Avenue
Suite 300
Ottawa, ON
613-722-4420

PROJECT INFORMATION:

Ashbury College

Tank

Ottawa, ON

CURRENT ISSUE DATE:

09/11/2026

ISSUED FOR:

PRELIMINARY

REV.	DATE:	ISSUED FOR:	DWN BY:
1	09/11/20026	PRELIMINARY	LR

SCALE:

NTS

SHEET TITLE:

GENERAL NOTES

SHEET NUMBER:

1.0

STRUCTURAL DESIGN LOADING CRITERIA

LIVE LOADING: AASHTO HS-20 HIGHWAY LOADING

ADDITIONAL SURCHARGE LOADING: PER ASTM C857 (3.83kPa)

GROUND WATER TABLE: @ 69.26m

SOIL BEARING PRESSURE: 150 kPa

SOIL DENSITY: 1922 kg/m³

EQUIVALENT UNSATURATED LATERAL ACTIVE EARTH PRESSURE: 5.5 kPa/m

EQUIVALENT SATURATED LATERAL ACTIVE EARTH PRESSURE: 12.57 kPa/m

APPLICABLE CODES: ASTM C857, ASTM C858-19, ACI-318, FOR CLEAR COVERS: CSA A23

BACKFILL TYPE: SEE SHEET 4.0 FOR BACKFILL OPTIONS

STORMTRAP SYSTEM INFORMATION

UNIT HEADROOM:	1.295m SINGLETRAP
TOTAL STORAGE PROV:	601.17 CUBIC METERS

DESIGN ASSUMPTIONS

1. ASTM C858-19:
   - 1.1. THE ELASTIC METHOD OF STRUCTURAL DESIGN OR THE STRENGTH DESIGN METHOD FOR REINFORCED CONCRETE OUTLINED IN ACI 318 SHALL BE USED TO DESIGN THE CONCRETE SECTIONS. LOAD COMBINATION FACTORS LISTED BELOW.
     - 1.1.1. DEAD: 1.4
     - 1.1.2. DEAD + LIVE: 1.2 + 1.6
     - 1.1.3. SOIL PRESSURE: 1.6
     - 1.1.4. SOIL SURCHARGE: 1.6

2. ASTM C857:
   - 2.1. LIVE LOAD: PER ASTM C858/C857
     - 2.1.1. AASHTO HS-20 - (71 kN) WHEEL LOAD.
     - 2.1.2. IMPACT LOADING PER ASTM C857 SECTION 4.1.2.2, APPLIED TO ALL LIVE LOAD OPTIONS LISTED ABOVE.
       - 2.1.2.1. 0.152m TO 0.305m COVER RANGE: 30% INCREASE
       - 2.1.2.2. ABOVE 0.306m TO 0.610m COVER RANGE: 20% INCREASE
       - 2.1.2.3. ABOVE 0.611m TO 0.889m COVER RANGE: 10% INCREASE
       - 2.1.2.4. ABOVE 0.890m ONWARDS: NOT APPLIED
   - 2.2. DISTRIBUTION OF WHEEL LOADS THROUGH EARTH FILLS: WHEEL LOADS AT GROUND OR SURFACE SHALL BE DISTRIBUTED USING A WHEEL LOAD AREA REPRESENTED IN FIGURE 2 AND DETAILED IN SECTION 4.1.4 OF ASTM C 857. THE WHEEL LOAD DISTRIBUTION CONSIDERATION IS IRRESPECTIVE OF THE THICKNESS OF SOIL COVER AND IS APPLIED TO ALL SOIL COVER RANGES FROM 0.152m UP TO 3.05m.
   - 2.3. EXTERIOR WALLS SURCHARGE LOADS: EXTERIOR WALLS SURCHARGE LOADS SHALL COMPLY WITH ASTM C 857 SECTION 4.2.1 FOR SURCHARGE PRESSURES, WHICH STATES THAT SURCHARGE PRESSURE SHALL BE NO LESS THAN 0.5% OF THE WHEEL LOAD. IN ADDITION TO THIS THE SURCHARGE PRESSURE CAN BE NEGLECTED WHEN THE DEPTH OF THE SOIL EXCEEDS 2.44m.

3. OTHER STANDARDS:
   - 3.1. FLEXURE DESIGN PER ACI 318.
   - 3.2. SHEAR DESIGN PER ACI 318.
   - 3.3. CLEAR COVERS PER CSA A23.

SITE SPECIFIC DESIGN CRITERIA

1. STORMTRAP UNITS SHALL BE MANUFACTURED AND INSTALLED ACCORDING TO SHOP DRAWINGS APPROVED BY THE INSTALLING CONTRACTOR AND ENGINEER OF RECORD. THE SHOP DRAWINGS SHALL INDICATE SIZE AND LOCATION OF ROOF OPENINGS AND INLET/ OUTLET PIPE TYPES, SIZES, INVERT ELEVATIONS AND SIZE OF OPENINGS.
2. COVER RANGE: MIN. 0.60m MAX. 0.84m CONSULT STORMTRAP FOR ADDITIONAL COVER OPTIONS.
3. ALL DIMENSIONS AND SOIL CONDITIONS, INCLUDING BUT NOT LIMITED TO GROUNDWATER AND SOIL BEARING CAPACITY ARE REQUIRED TO BE VERIFIED IN THE FIELD BY OTHERS PRIOR TO STORMTRAP INSTALLATION.
4. FOR STRUCTURAL CALCULATIONS THE GROUND WATER TABLE IS ASSUMED TO BE @ 69.26m. IF WATER TABLE IS DIFFERENT THAN ASSUMED, CONTACT STORMTRAP.
5. SYSTEM DESIGN INTENT IS TO CONTAIN WATER AND / OR PREVENT GROUNDWATER MIGRATION INTO THE SYSTEM AND WILL NOT BE SUBJECT TO LEAKAGE TESTING. A THIRD PARTY WATER PROOFING SOLUTION IS REQUIRED FOR SEALING OF SYSTEM / MODULE JOINTS AND SEAMS. SOLUTION TO BE PROVIDED AND INSTALLED BY CONTRACTOR IN ACCORDANCE WITH THIRD PARTY WATER-PROOFING SUPPLIER'S PRODUCT SPECIFICATIONS.

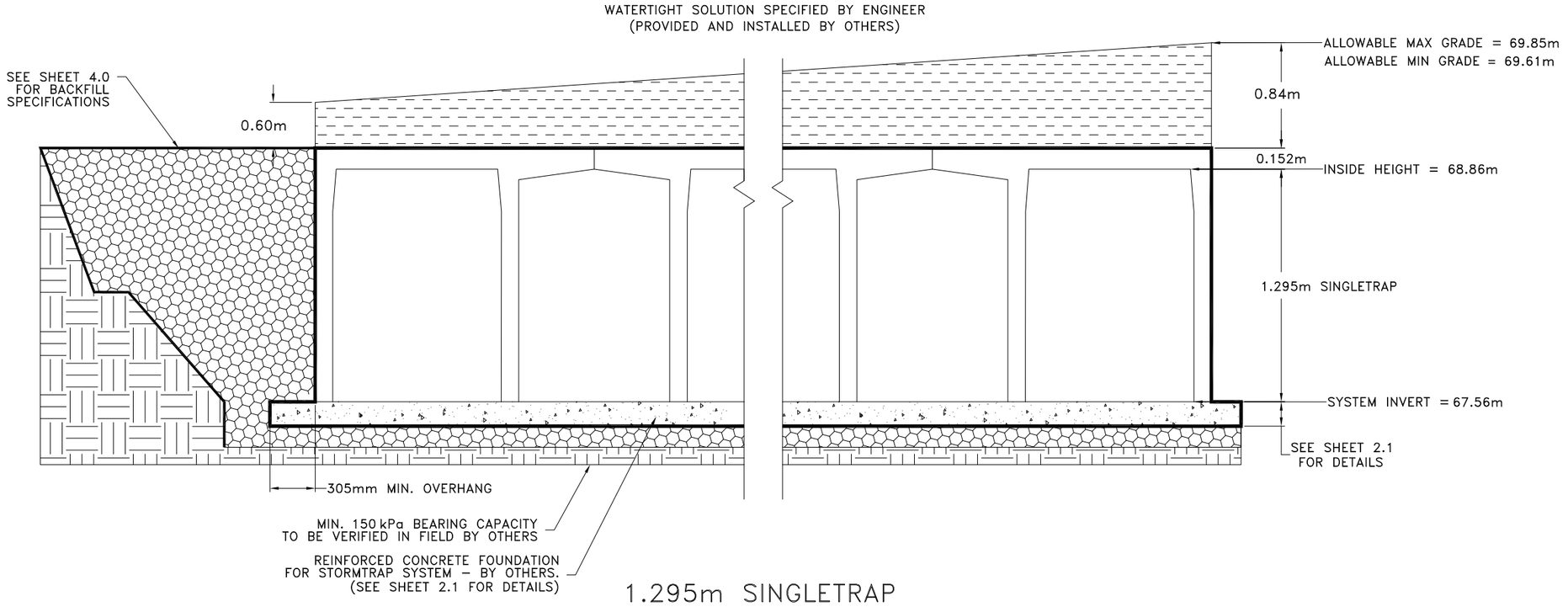

1.295m SINGLETRAP

StormTrap

PATENTS LISTED AT: [HTTP://STORMTRAP.COM/PATENT]

1287 WINDHAM PARKWAY
ROMEOVILLE, IL 60446
P:815-941-4549 / F:331-318-5347

ENGINEER INFORMATION:

Stantec
1331 Clyde Avenue
Suite 300
Ottawa, ON
613-722-4420

PROJECT INFORMATION:

Ashbury College

Tank

Ottawa, ON

CURRENT ISSUE DATE:

09/11/2026

ISSUED FOR:

PRELIMINARY

REV.	DATE:	ISSUED FOR:	DWN BY:
1	09/11/20026	PRELIMINARY	LR

SCALE:

NTS

SHEET TITLE:

SINGLETRAP DESIGN CRITERIA

SHEET NUMBER:

1.1

BILL OF MATERIALS

QTY.	UNIT TYPE	DESCRIPTION	WEIGHT
27	I	1.295m SINGLETRAP	6820
0	II	1.295m SINGLETRAP	–
15	III	1.295m SINGLETRAP	6560
4	IV	1.295m SINGLETRAP	6993
0	VII	1.295m SINGLETRAP	–
0	VII–1	1.295m SINGLETRAP	–
0	VII–2	1.295m SINGLETRAP	–
0	VII–3	1.295m SINGLETRAP	–
0	VII–4	1.295m SINGLETRAP	–
0	SPIII	1.295m SINGLETRAP	VARIES
1	SPIV	1.295m SINGLETRAP	VARIES
1	T2 PANEL	152mm THICK PANEL	1360
4	T4 PANEL	152mm THICK PANEL	1071
0	T7 PANEL	152mm THICK PANEL	–
23	JOINTWRAP	18.29m PER ROLL	
32	JOINTTAPE	4.42m PER ROLL	
5	GALLON(S)	PRIMER FOR JOINT WRAP	
TOTAL PIECES = 47			
TOTAL PANELS = 5			
HEAVIEST PICK WEIGHT = 6,993			

N

DESIGN CRITERIA

ALLOWABLE MAX GRADE = 69.85m
ALLOWABLE MIN GRADE = 69.61m
INSIDE HEIGHT ELEVATION = 68.86m
SYSTEM INVERT = 67.56m

NOTES:

1. DIMENSIONING OF STORMTRAP SYSTEM SHOWN BELOW ALLOW FOR A 19mm (3/4") GAP BETWEEN EACH MODULE.
2. ALL DIMENSIONS TO BE VERIFIED IN THE FIELD BY OTHERS.
3. SEE SHEET 3.0 FOR INSTALLATION SPECIFICATIONS.
4. SP – INDICATES A MODULE WITH MODIFICATIONS.
5. P – INDICATES A MODULE WITH A PANEL ATTACHMENT.
6. CONTRACTORS RESPONSIBILITY TO ENSURE CONSISTENCY/ACCURACY TO FINAL ENGINEER OF RECORD PLAN SET.
7. IN ORDER FOR STORMTRAP TO GENERATE APPROVAL DRAWINGS, CIVIL ENGINEERING DRAWINGS MUST BE PROVIDED TO STORMTRAP AND SHALL INCLUDE ALL PIPE SIZES, PIPE MATERIAL, PIPE INVERT ELEVATIONS, ACCESS OPENING SIZE AND SHAPE. IN ADDITION, FINAL GRADING PLANS SHALL ALSO INCLUDE MINIMUM AND MAXIMUM GRADES OVER THE TOP OF THE STORMTRAP SYSTEM.

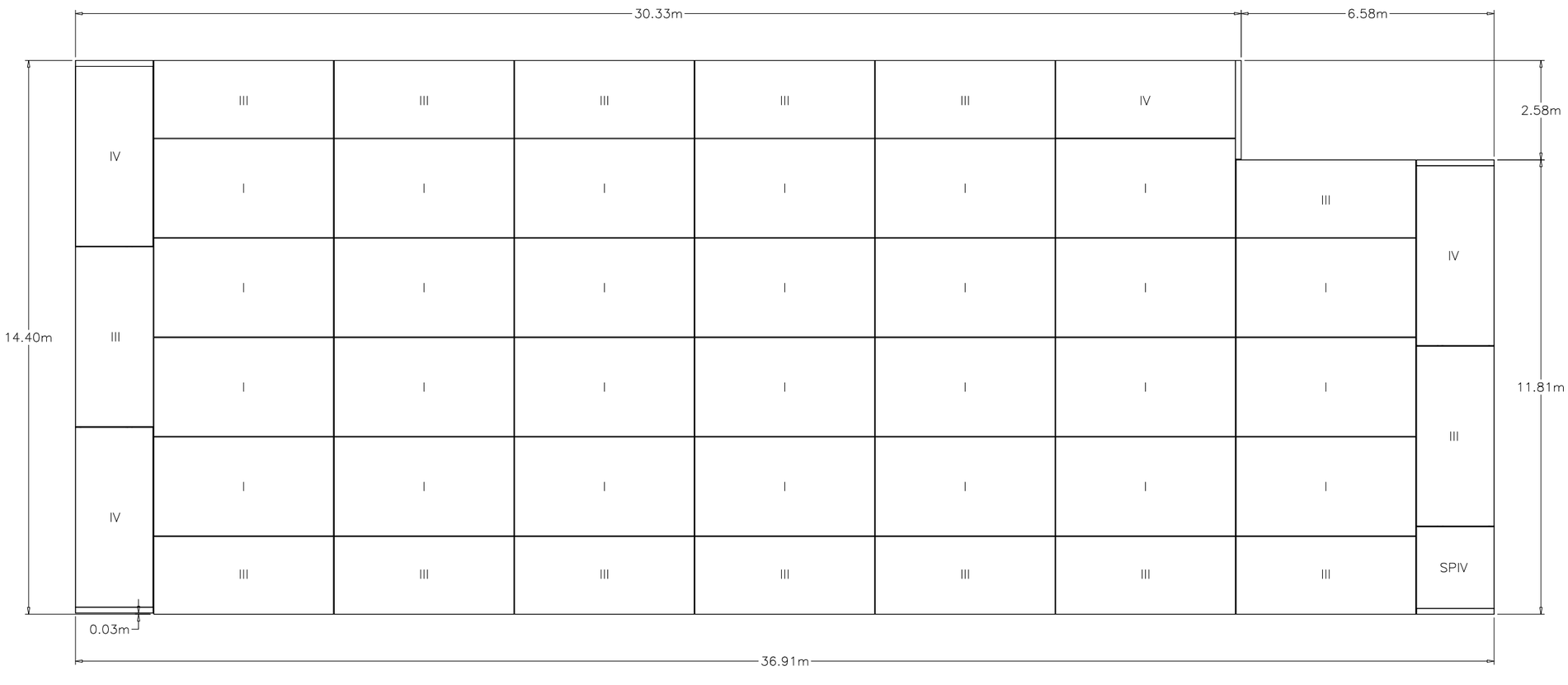

StormTrap®
PATENTS LISTED AT: [HTTP://STORMTRAP.COM/PATENT]
1287 WINDHAM PARKWAY
ROMEOVILLE, IL 60446
P:815–941–4549 / F:331–318–5347

ENGINEER INFORMATION:

Stantec
1331 Clyde Avenue
Suite 300
Ottawa, ON
613–722–4420

PROJECT INFORMATION:

Ashbury College

Tank

Ottawa, ON

CURRENT ISSUE DATE:

09/11/2026

ISSUED FOR:

PRELIMINARY

REV.	DATE:	ISSUED FOR:	DWN BY:
1	09/11/20026	PRELIMINARY	LR

SCALE:

NTS

SHEET TITLE:

SINGLETRAP
SYSTEM LAYOUT

SHEET NUMBER:

2.0

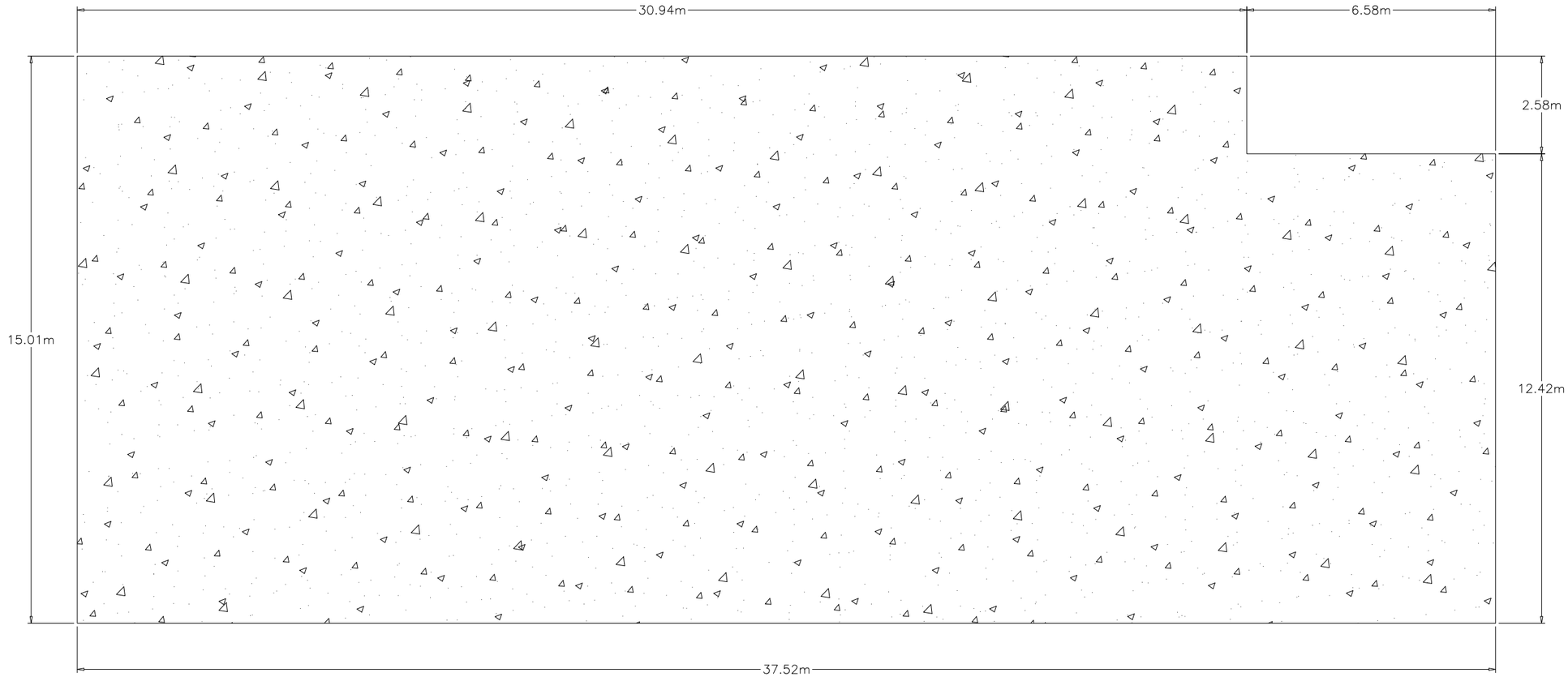

CONCRETE FOUNDATION NOTES:

1. CONCRETE FOUNDATION TO BE SUPPLIED AND INSTALLED BY OTHERS.
2. CONCRETE STRENGTH @ 28 DAYS, 5%–8% ENTRAINED AIR, 76mm–127mm (3"–5") MAX SLUMP.
3. NET ALLOWABLE SOIL PRESSURE AS INDICATED ON SHEET 1.1.
4. SOIL CONDITIONS TO BE VERIFIED ON SITE BY OTHERS.
5. REBAR: ASTM A615 GRADE 60, BLACK BAR.
6. DIMENSION OF FOUNDATION MUST HAVE 305mm (1'–0") OVERHANG BEYOND EXTERNAL FACE OF MODULE.
7. DIMENSION OF STORMTRAP SYSTEM ALLOW FOR A 19mm (3/4") GAP BETWEEN EACH MODULE.
8. ALL DIMENSIONS TO BE VERIFIED IN THE FIELD BY OTHERS.
9. SEE SHEET 3.0 FOR INSTALLATION SPECIFICATIONS.

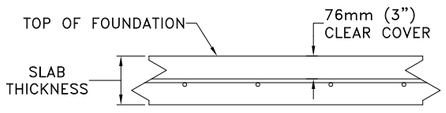

STORMTRAP FOUNDATION DETAIL

(HS–20) LOADING				
MAXIMUM SYSTEM COVER	SLAB THICKNESS	CONCRETE STRENGTH	MIN. BEARING PRESSURE	REINFORCEMENT (BOTH DIRECTIONS)
152mm – 1524mm	203mm	28 mPa	120 kPa	15M @ 406mm O.C.
1549mm – 3048mm	203mm	28 mPa	143 kPa	15M @ 305mm O.C.

StormTrap

PATENTS LISTED AT: [HTTP://STORMTRAP.COM/PATENT]

1287 WINDHAM PARKWAY
ROMEOVILLE, IL 60446
P:815–941–4549 / F:331–318–5347

ENGINEER INFORMATION:

Stantec
1331 Clyde Avenue
Suite 300
Ottawa, ON
613–722–4420

PROJECT INFORMATION:

Ashbury College

Tank

Ottawa, ON

CURRENT ISSUE DATE:

09/11/2026

ISSUED FOR:

PRELIMINARY

REV.	DATE:	ISSUED FOR:	DWN BY:
1	09/11/20026	PRELIMINARY	LR

SCALE:

NTS

SHEET TITLE:

SINGLETRAP FOUNDATION LAYOUT

SHEET NUMBER:

2.1

STORMTRAP INSTALLATION SPECIFICATION

1. STORMTRAP SHALL BE INSTALLED IN ACCORDANCE WITH ASTM C891 (STANDARD PRACTICE FOR INSTALLATION OF UNDERGROUND PRECAST CONCRETE UTILITY STRUCTURES). THE FOLLOWING ADDITIONS AND/OR EXCEPTIONS ARE PROVIDED FOR EMPHASIS. THE MENTION OF THESE ITEMS DOES NOT PRECLUDE THE INSTALLING CONTRACTOR FROM FOLLOWING ASTM C891 IN ITS ENTIRETY AND IMPLEMENTING ALL APPROPRIATE MEASURES. THE INSTALLING CONTRACTOR OWNS AND IS RESPONSIBLE FOR THE STORMTRAP SYSTEM UPON REMOVAL OF THE MODULES FROM THE DELIVERY TRUCK THROUGH 'FINAL CONSTRUCTION'. FINAL CONSTRUCTION IS ACHIEVED WHEN ALL MODULES ARE SET, FULLY BACKFILLED, AND WHEN FINAL FINISHED GRADES ARE REACHED. THE CONTRACTOR IS RESPONSIBLE FOR ANY COUNTERMEASURES NECESSARY TO RESIST UPLIFT/BUOYANCY BEFORE 'FINAL CONSTRUCTION' IS ACHIEVED.

2. IT IS THE RESPONSIBILITY OF THE INSTALLING CONTRACTOR TO ENSURE THAT PROPER/ADEQUATE EQUIPMENT IS USED TO SET/INSTALL THE MODULES.

3. STORMTRAP MODULES SHALL BE PLACED ON A LEVEL CONCRETE FOUNDATION (SEE SHEET 2.1) WITH A 305mm (1'–0") OVERHANG ON ALL SIDES THAT SHALL BE POURED IN PLACE BY INSTALLING CONTRACTOR. A QUALIFIED GEOTECHNICAL ENGINEER WILL BE EMPLOYED, BY OWNER, TO PROVIDE ASSISTANCE IN EVALUATING THE EXISTING SOIL CONDITIONS TO ENSURE THAT THE SOIL BEARING PRESSURE MEETS OR EXCEEDS THE STRUCTURAL DESIGN LOADING CRITERIA AS SPECIFIED ON SHEET 1.1.

4. THE STORMTRAP MODULES SHALL BE PLACED SUCH THAT THE MAXIMUM SPACE BETWEEN ADJACENT MODULES DOES NOT EXCEED 19mm ($\frac{3}{4}$") (SEE DETAIL 2). IF THE SPACE EXCEEDS 19mm ($\frac{3}{4}$"), THE MODULES SHALL BE RESET WITH APPROPRIATE ADJUSTMENT MADE TO LINE AND GRADE TO BRING THE SPACE INTO SPECIFICATION.

5. STORMTRAP MODULES ARE NOT WATERTIGHT. WATERTIGHT SOLUTION SPECIFIED BY ENGINEER (PROVIDED AND INSTALLED BY OTHERS).

6. THE PERIMETER HORIZONTAL JOINT BETWEEN THE STORMTRAP MODULES AND THE CONCRETE FOUNDATION SHALL BE SEALED TO THE FOUNDATION WITH PRE–FORMED MASTIC JOINT SEALER ACCORDING TO ASTM C891, 8.8 AND 8.12 (SEE DETAIL 1). THE MASTIC JOINT TAPE DOES NOT PROVIDE A WATERTIGHT SEAL.

7. ALL EXTERIOR ROOF AND EXTERIOR VERTICAL WALL JOINTS BETWEEN ADJACENT STORMTRAP MODULES SHALL BE SEALED WITH 203mm (8") WIDE PRE–FORMED, COLD–APPLIED, SELF–ADHERING ELASTOMERIC RESIN, BONDED TO A WOVEN , HIGHLY PUNCTURE RESISTANT POLYMER WRAP, CONFORMING TO ASTM C891 AND SHALL BE INTEGRATED WITH PRIMER SEALANT AS APPROVED BY STORMTRAP (SEE DETAILS 2, 3, & 4). THE JOINT WRAP DOES NOT PROVIDE A WATERTIGHT SEAL. THE SOLE PURPOSE OF THE JOINT WRAP IS TO PROVIDE A SILT AND SOIL TIGHT SYSTEM. THE ADHESIVE EXTERIOR JOINT WRAP SHALL BE INSTALLED ACCORDING TO THE FOLLOWING INSTALLATION INSTRUCTIONS:

   7.1. USE A BRUSH OR WET CLOTH TO THOROUGHLY CLEAN THE OUTSIDE SURFACE AT THE POINT WHERE JOINT WRAP IS TO BE APPLIED.

   7.2. A RELEASE PAPER PROTECTS THE ADHESIVE SIDE OF THE JOINT WRAP. PLACE THE ADHESIVE TAPE (ADHESIVE SIDE DOWN) AROUND THE STRUCTURE, REMOVING THE RELEASE PAPER AS YOU GO. PRESS THE JOINT WRAP FIRMLY AGAINST THE STORMTRAP MODULE SURFACE WHEN APPLYING.

8. IF THE CONTRACTOR NEEDS TO CANCEL ANY SHIPMENTS, THEY MUST DO SO 48 HOURS PRIOR TO THEIR SCHEDULED ARRIVAL AT THE JOB SITE. IF CANCELED AFTER THAT TIME, PLEASE CONTACT THE PROJECT MANAGER.

9. IF THE STORMTRAP MODULE(S) IS DAMAGED IN ANY WAY PRIOR, DURING, OR AFTER INSTALL, STORMTRAP MUST BE CONTACTED IMMEDIATELY TO ASSESS THE DAMAGE AND DETERMINE WHETHER OR NOT THE MODULE(S) WILL NEED TO BE REPLACED. IF ANY MODULE ARRIVES AT THE JOBSITE DAMAGED DO NOT UNLOAD IT; CONTACT STORMTRAP IMMEDIATELY. ANY DAMAGE NOT REPORTED BEFORE THE TRUCK IS UNLOADED WILL BE THE CONTRACTOR'S RESPONSIBILITY.

10. STORMTRAP MODULES CANNOT BE ALTERED IN ANY WAY AFTER MANUFACTURING WITHOUT WRITTEN CONSENT FROM STORMTRAP.

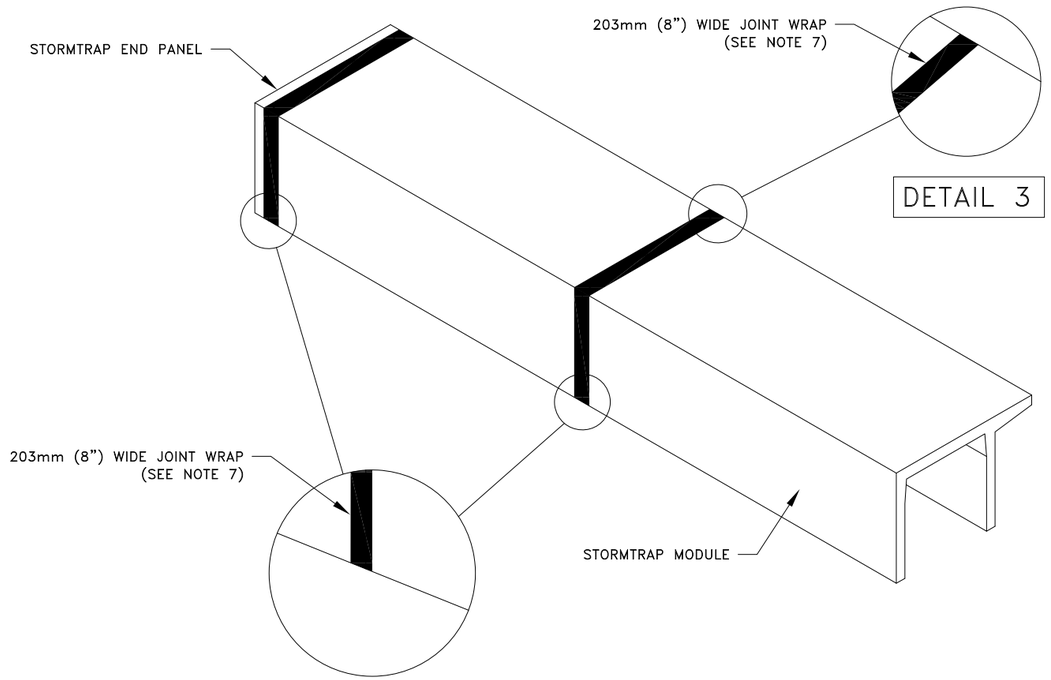

DETAIL 4

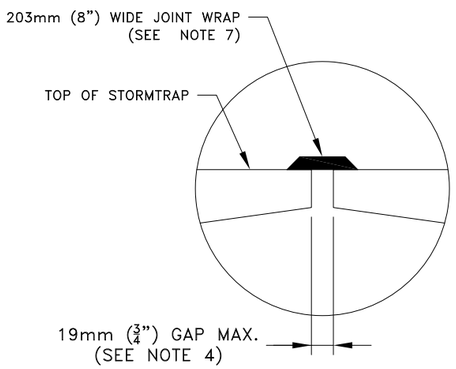

DETAIL 2

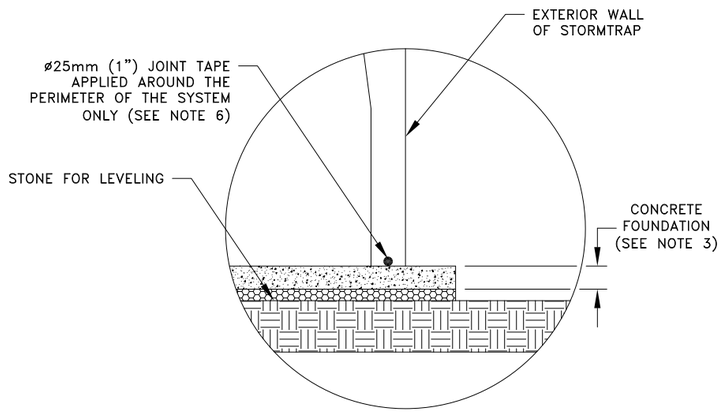

DETAIL 1

StormTrap

PATENTS LISTED AT: [HTTP://STORMTRAP.COM/PATENT]

1287 WINDHAM PARKWAY
ROMEOVILLE, IL 60446
P:815–941–4549 / F:331–318–5347

ENGINEER INFORMATION:

Stantec
1331 Clyde Avenue
Suite 300
Ottawa, ON
613–722–4420

PROJECT INFORMATION:

Ashbury College

Tank

Ottawa, ON

CURRENT ISSUE DATE:

09/11/2026

ISSUED FOR:

PRELIMINARY

REV.	DATE:	ISSUED FOR:	DWN BY:
1	09/11/20026	PRELIMINARY	LR

SCALE:

NTS

SHEET TITLE:

SINGLETRAP INSTALLATION SPECIFICATION

SHEET NUMBER:

3.0

STORMTRAP MODULE LIFTING SPECIFICATION

1. IT IS THE CONTRACTOR'S RESPONSIBILITY TO ENSURE THAT ALL (4) CHAINS/CABLES ARE SECURED PROPERLY TO THE LIFTING ANCHORS AND IN EQUAL TENSION WHEN LIFTING THE STORMTRAP MODULE.
2. MINIMUM 2134mm (7'FT) CHAIN/CABLE LENGTH TO BE USED TO LIFT STORMTRAP MODULES (SUPPLIED BY CONTRACTOR).
3. CONTRACTOR TO ENSURE MINIMUM LIFTING ANGLE IS 60° FROM TOP SURFACE OF STORMTRAP MODULE. SEE DETAIL.
4. IT IS UNDERSTOOD AND AGREED THAT AT ALL TIMES DURING WHICH HOISTING AND RIGGING EQUIPMENT IS BEING SUPPLIED TO THE PURCHASER, OPERATOR OF SUCH EQUIPMENT SHALL BE IN CHARGE OF HIS ENTIRE EQUIPMENT AND SHALL AT ALL TIMES BE THE JUDGE OF THE SAFETY AND PROPERTY OF ANY SUGGESTION TO HIM FROM THE SELLER, ITS AGENTS OR EMPLOYEES. PURCHASER AGREES TO SAVE, INDEMNIFY AND HOLD HARMLESS SELLER FROM ALL LOSS, CLAIMS, DEMANDS OR CAUSES OF ACTION, WHICH MAY ARISE FROM THE EXISTENCE OR OPERATION OF SAID EQUIPMENT.

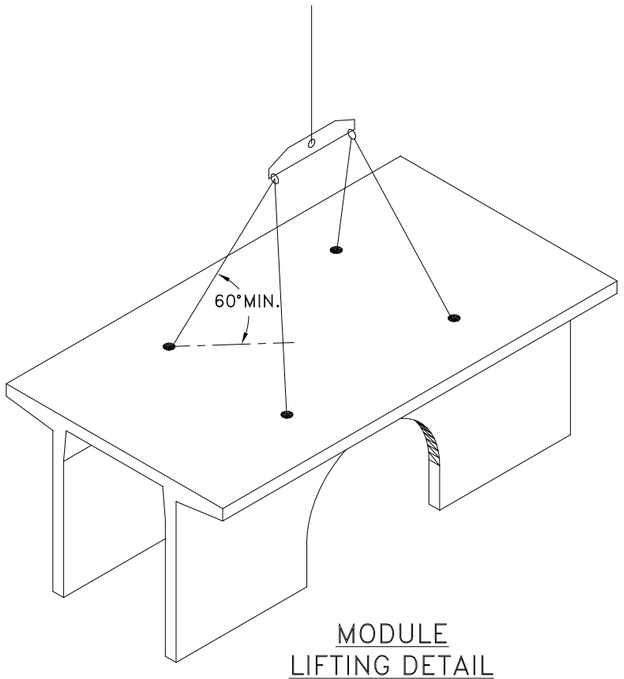

MODULE
LIFTING DETAIL

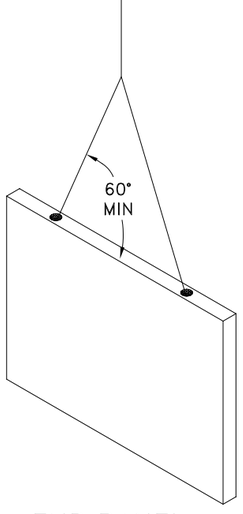

END PANEL
LIFTING DETAIL

END PANEL ERECTION/INSTALLATION SPECIFICATION

1. END PANELS WILL BE SUPPLIED TO CLOSE OFF OPEN ENDS OF ROWS.
2. PANELS SHALL BE INSTALLED IN A TILT UP FASHION DIRECTLY ADJACENT TO OPEN END OF MODULE (REFER TO SHEET 2.0 FOR END PANEL LOCATIONS). SIDE WITH LIFTERS INDICATES OUTSIDE FACE.
3. CONNECTION HOOKS WILL BE SUPPLIED WITH END PANELS TO SECURELY CONNECT PANEL TO ADJACENT STORMTRAP MODULE (SEE PANEL CONNECTION ELEVATION VIEW).
4. ONCE CONNECTION HOOK IS ATTACHED, LIFTING CLUTCHES MAY BE REMOVED.
5. JOINT WRAP SHALL BE PLACED AROUND PERIMETER JOINT PANEL (SEE SHEET 3.0).

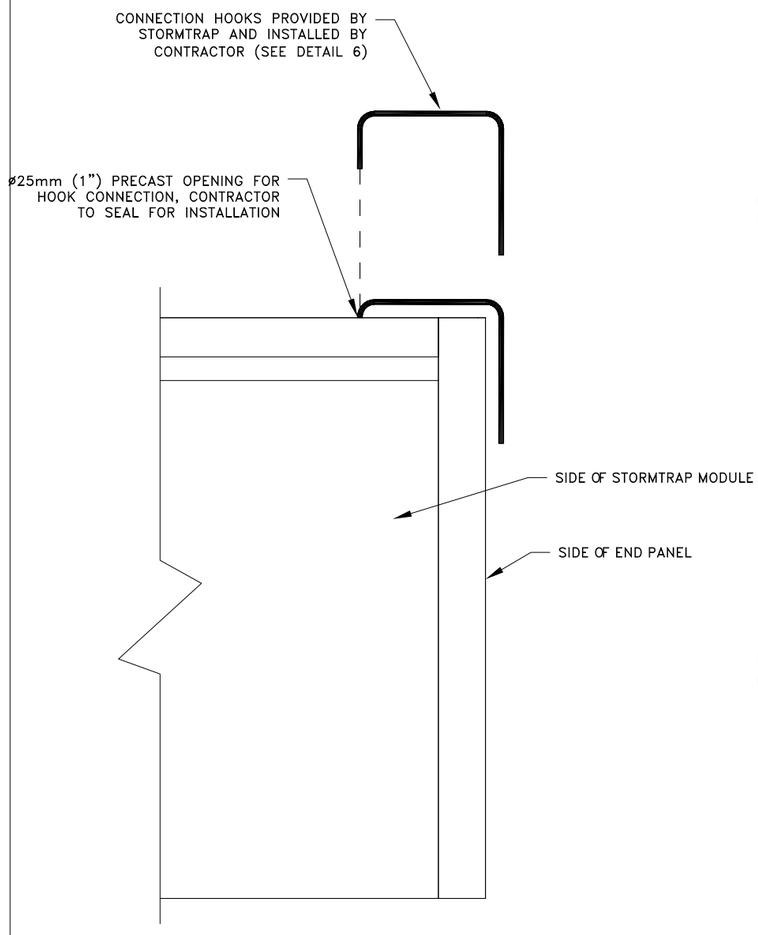

PANEL CONNECTION
ELEVATION VIEW

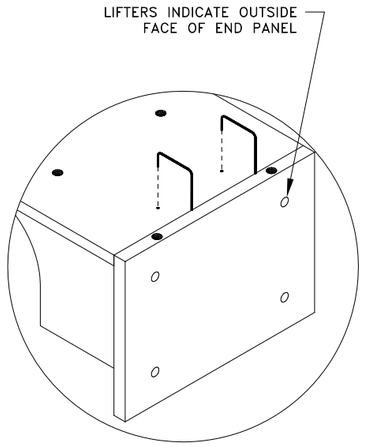

STEP 1

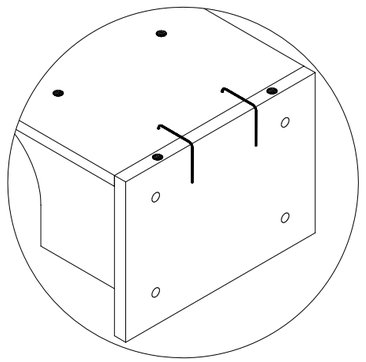

STEP 2

DETAIL 6

StormTrap
PATENTS LISTED AT: [HTTP://STORMTRAP.COM/PATENT]
1287 WINDHAM PARKWAY
ROMEOVILLE, IL 60446
P:815-941-4549 / F:331-318-5347

ENGINEER INFORMATION:

Stantec
1331 Clyde Avenue
Suite 300
Ottawa, ON
613-722-4420

PROJECT INFORMATION:

Ashbury College

Tank

Ottawa, ON

CURRENT ISSUE DATE:

09/11/2026

ISSUED FOR:

PRELIMINARY

REV.	DATE:	ISSUED FOR:	DWN BY:
1	09/11/20026	PRELIMINARY	LR

SCALE:

NTS

SHEET TITLE:

SINGLETRAP
INSTALLATION
SPECIFICATION

SHEET NUMBER:

3.1

ZONE CHART

ZONES	ZONE DESCRIPTIONS	REMARKS
ZONE 1	FOUNDATION AGGREGATE	ANGULAR STONE AGGREGATE. 19mm (¾") TYPE I OR II CLEAR STONE (OPSS.MUNI 1004) GRADATION: 100% PASSING 26.5mm SIEVE, 0–10% PASSING 4.75mm SIEVE; 0–2% PASSING 75 MICROMETER SIEVE (SEE NOTE 4)
ZONE 2	BACKFILL	UNIFIED SOILS CLASSIFICATION (GW, GP, SW, SP) OR SEE BELOW FOR APPROVED BACKFILL OPTIONS
ZONE 3	FINAL COVER OVERTOP	MATERIALS NOT TO EXCEED 19 kN/m³

APPROVED ZONE 2 BACKFILL OPTIONS

OPTION	REMARKS
19mm (¾") TYPE I OR II CLEAR STONE (OPSS.MUNI 1004)	THE STONE AGGREGATE SHALL CONSIST OF CLEAN AND FREE DRAINING ANGULAR MATERIAL. THIS MATERIAL SHALL BE SEPARATED FROM THE SURROUNDING NATIVE SOIL AND OTHER FILL MATERIAL USING GEOFABRIC AS DETERMINED BY THE GEOTECHNICAL ENGINEER. GRADATION: 100% PASSING 26.5mm SIEVE, 0–10% PASSING 4.75mm SIEVE; 0–2% PASSING 75 MICROMETER SIEVE.
16mm CLEAR STONE (OPSS.MUNI 1004)	THE STONE AGGREGATE SHALL CONSIST OF CLEAN AND FREE DRAINING ANGULAR MATERIAL. THIS MATERIAL SHALL BE SEPARATED FROM THE SURROUNDING NATIVE SOIL AND OTHER FILL MATERIAL USING GEOFABRIC AS DETERMINED BY THE GEOTECHNICAL ENGINEER. GRADATION: 100% PASSING 19.0mm SIEVE, 0–10% PASSING 4.75mm SIEVE; 0–2% PASSING 75 MICROMETER SIEVE.
13.2mm CLEAR STONE (OPSS.MUNI 1004)	THE STONE AGGREGATE SHALL CONSIST OF CLEAN AND FREE DRAINING ANGULAR MATERIAL. THIS MATERIAL SHALL BE SEPARATED FROM THE SURROUNDING NATIVE SOIL AND OTHER FILL MATERIAL USING GEOFABRIC AS DETERMINED BY THE GEOTECHNICAL ENGINEER. GRADATION: 100% PASSING 16.0mm SIEVE, 0–10% PASSING 4.75mm SIEVE; 0–2% PASSING 75 MICROMETER SIEVE.
GRANULAR O (OPSS.MUNI 1010)	THE STONE AGGREGATE SHALL CONSIST OF CLEAN AND FREE DRAINING ANGULAR MATERIAL. THIS MATERIAL SHALL BE SEPARATED FROM THE SURROUNDING NATIVE SOIL AND OTHER FILL MATERIAL USING GEOFABRIC AS DETERMINED BY THE GEOTECHNICAL ENGINEER. GRADATION: 100% PASSING 37.5mm SIEVE, 95–100% PASSING 26.5mm SIEVE; 0–5% PASSING 75 MICROMETER SIEVE.

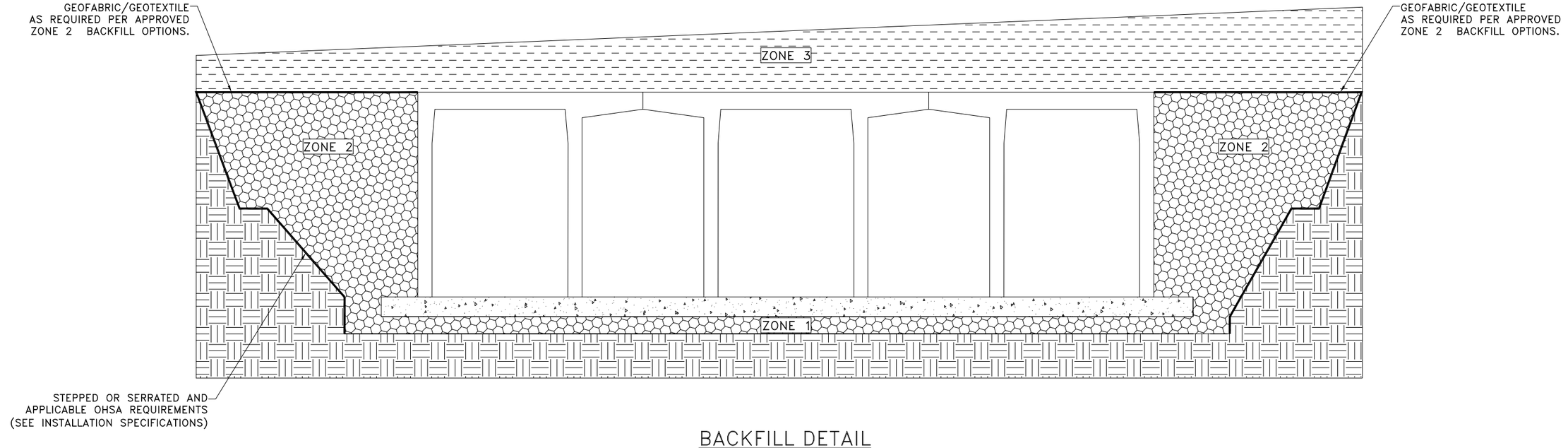

BACKFILL DETAIL

STORMTRAP ZONE INSTALLATION SPECIFICATION/PROCEDURE

1. THE FILL PLACED AROUND THE STORMTRAP MODULES MUST BE DEPOSITED ON BOTH SIDES AT THE SAME TIME AND TO APPROXIMATELY THE SAME ELEVATION. AT NO TIME SHALL THE FILL BEHIND ONE SIDE WALL BE MORE THAN 610mm (2'–0") HIGHER THAN THE FILL ON THE OPPOSITE SIDE. BACKFILL SHALL EITHER BE COMPACTED AND/OR VIBRATED TO ENSURE THAT BACKFILL AGGREGATE/STONE MATERIAL IS WELL SEATED AND PROPERLY INTER LOCKED. CARE SHALL BE TAKEN TO PREVENT ANY WEDGING ACTION AGAINST THE STRUCTURE, AND ALL SLOPES WITHIN THE AREA TO BE BACKFILLED MUST BE STEPPED OR SERRATED TO PREVENT WEDGING ACTION. CARE SHALL ALSO BE TAKEN AS NOT TO DISRUPT THE JOINT WRAP FROM THE JOINT DURING THE BACKFILL PROCESS. BACKFILL MUST BE FREE–DRAINING MATERIAL. SEE ZONE 2 BACKFILL CHART ON THIS PAGE FOR APPROVED BACKFILL OPTIONS. IF NATIVE EARTH IS SUSCEPTIBLE TO MIGRATION, CONFIRM WITH GEOTECHNICAL ENGINEER AND PROVIDE PROTECTION AS REQUIRED (PROVIDED BY OTHERS). ALL MODULES MUST BE SET AND ALL SIDES MUST BE FULLY BACKFILLED BEFORE TRAVEL OVERTOP THE SYSTEM IS PERMITTED. SEE NOTE 2 FOR EXCEPTIONS AND LIMITATIONS.
2. THE FILL PLACED OVERTOP THE SYSTEM SHALL BE PLACED IN MINIMUM 152mm (6" LIFTS). AT NO TIME SHALL MACHINERY OR VEHICLES GREATER THAN THE DESIGN LIVE LOAD LISTED ON SHEET 1.1 TRAVEL OVERTOP THE SYSTEM. IF TRAVEL OVER THE SYSTEM OCCURS BEFORE THE MINIMUM DESIGN COVER IS ACHIEVED, IT MAY BE NECESSARY TO REDUCE THE ULTIMATE LOAD/BURDEN OF THE OPERATING MACHINERY SO AS TO NOT EXCEED THE DESIGN CAPACITY OF THE SYSTEM. VEHICLES AND MACHINERY USED TO PLACE FILL MATERIAL ON TOP OF THE SYSTEM SHALL TRAVEL PARALLEL TO THE LONGITUDINAL AXIS OF THE STORMTRAP MODULES WHENEVER POSSIBLE.
3. THE VIBRATORY FUNCTION OF ANY ROLLER, COMPACTOR, VEHICLE, ETC. SHALL NOT BE USED OVERTOP THE SYSTEM WITHOUT PRIOR APPROVAL FROM STORMTRAP. IN SOME CASES, HAND COMPACTION MAY BE NECESSARY TO ENSURE THAT THE ALLOWABLE DESIGN LOADING IS NOT EXCEEDED.
4. STONE AGGREGATE FOUNDATION IN ZONE 1 IS FOR LEVELING PURPOSES.

StormTrap
PATENTS LISTED AT: [HTTP://STORMTRAP.COM/PATENT]
1287 WINDHAM PARKWAY
ROMEOVILLE, IL 60446
P:815–941–4549 / F:331–318–5347

ENGINEER INFORMATION:

Stantec
1331 Clyde Avenue
Suite 300
Ottawa, ON
613–722–4420

PROJECT INFORMATION:

Ashbury College

Tank

Ottawa, ON

CURRENT ISSUE DATE:

09/11/2026

ISSUED FOR:

PRELIMINARY

REV.	DATE:	ISSUED FOR:	DWN BY:
1	09/11/20026	PRELIMINARY	LR

SCALE:

NTS

SHEET TITLE:

SINGLETRAP BACKFILL SPECIFICATION

SHEET NUMBER:

4.0

ACCESS OPENING SPECIFICATION

1. A TYPICAL ACCESS OPENING FOR THE STORMTRAP SYSTEM ARE 610mm (2'–0") IN DIAMETER. ACCESS OPENINGS LARGER THAN 1219mm (4'–0") IN DIAMETER NEED TO BE APPROVED BY STORMTRAP. ALL OPENINGS MUST RETAIN AT LEAST 610mm (2'–0") OF CLEARANCE FROM THE END OF THE STORMTRAP MODULE UNLESS NOTED OTHERWISE. ALL ACCESS OPENINGS TO BE LOCATED ON INSIDE LEG UNLESS OTHERWISE SPECIFIED. SEE SHEET 2.0 FOR SIZES AND LOCATIONS.
2. UNLESS OTHERWISE SPECIFIED, PLASTIC COATED STEPS ARE PROVIDED INSIDE ANY MODULE WHERE DEEMED NECESSARY. THE HIGHEST STEP IN THE MODULE IS TO BE PLACED A DISTANCE OF 305mm (1'–0") FROM THE INSIDE EDGE OF THE STORMTRAP MODULES. ALL ENSUING STEPS SHALL BE PLACED AT A DISTANCE BETWEEN 254mm (10") MIN AND 356mm (14") MAX BETWEEN THEM. STEPS MAY BE MOVED OR ALTERED TO AVOID OPENINGS OR OTHER IRREGULARITIES IN THE MODULE.
3. STORMTRAP LIFTING INSERTS MAY BE RELOCATED TO AVOID INTERFERENCE WITH ACCESS OPENINGS OR THE CENTER OF GRAVITY OF THE MODULE AS NEEDED.
4. STORMTRAP ACCESS OPENINGS MAY BE RELOCATED TO AVOID INTERFERENCE WITH INLET AND/OR OUTLET PIPE OPENINGS SO PLACEMENT OF STEPS IS ATTAINABLE.
5. ACCESS OPENINGS SHOULD BE LOCATED IN ORDER TO MEET THE APPROPRIATE MUNICIPAL REQUIREMENTS. STORMTRAP RECOMMENDS AT LEAST TWO ACCESS OPENINGS PER SYSTEM FOR ACCESS AND INSPECTION.
6. USE PRECAST ADJUSTING RINGS AS NEEDED TO MEET GRADE. STORMTRAP RECOMMENDS FOR COVER OVER 610mm (2'–0") TO USE PRECAST BARREL OR CONE SECTIONS. (PROVIDED BY OTHERS)

PIPE OPENING SPECIFICATION

1. MINIMUM EDGE DISTANCE FOR AN OPENING ON THE OUTSIDE WALL SHALL BE NO LESS THAN 305mm (1'–0").
2. CONNECTING PIPES MAY BE INSTALLED WITH A 305mm (1'–0") CONCRETE COLLAR AND AN AGGREGATE CRADLE (AS REQUIRED) FOR AT LEAST ONE PIPE LENGTH (SEE PIPE CONNECTION DETAIL). A STRUCTURAL GRADE CONCRETE OR HIGH STRENGTH, NON–SHRINK GROUT WITH A MINIMUM 28 DAY COMPRESSIVE STRENGTH OF 35 mPa MAY BE USED.
3. THE ANNULAR SPACE BETWEEN THE PIPE AND THE HOLE SHALL BE FILLED WITH HIGH STRENGTH NON–SHRINK GROUT.

PIPE INSTALLATION INSTRUCTIONS

1. CLEAN AND LIGHTLY LUBRICATE ALL OF THE PIPE TO BE INSERTED INTO STORMTRAP.
2. IF PIPE IS CUT, CARE SHOULD BE TAKEN TO ALLOW NO SHARP EDGES. BEVEL AND LUBRICATE LEAD END OF PIPE.
3. ALIGN CENTER OF PIPE TO CORRECT ELEVATION AND INSERT INTO OPENING.

NOTE: ALL ANCILLARY PRODUCTS/SPECIFICATIONS RECOMMENDED AND SHOWN ON THIS SHEET INCLUDING BUT NOT LIMITED TO CONCRETE COLLARS, AGGREGATE CRADLES, GRADE RINGS, RISER SECTIONS, ETC., ARE RECOMMENDATIONS ONLY AND SUBJECT TO CHANGE PER THE INSTALLING CONTRACTOR AND/OR PER LOCAL MUNICIPAL CODE/REQUIREMENTS.

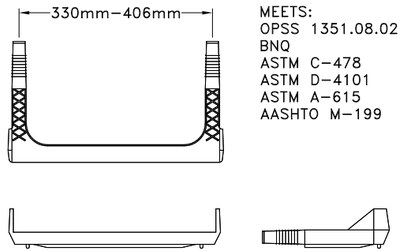

STEP DETAIL

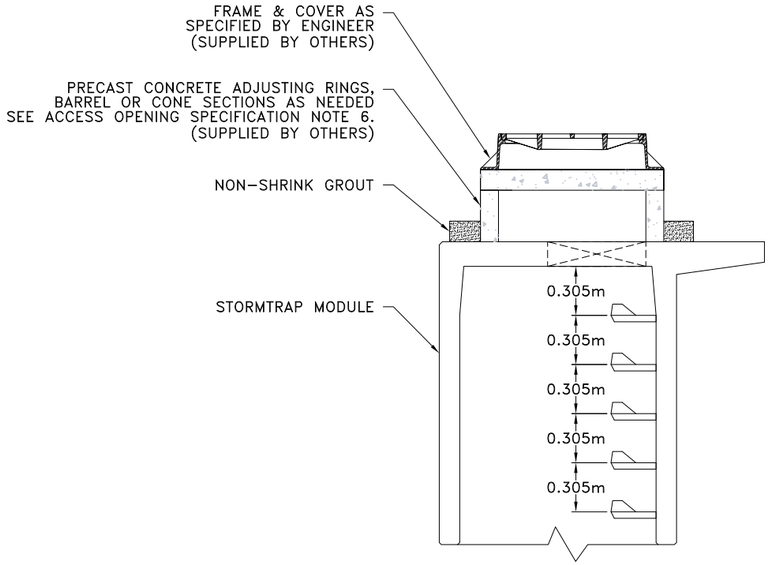

RISER/STAIR DETAIL

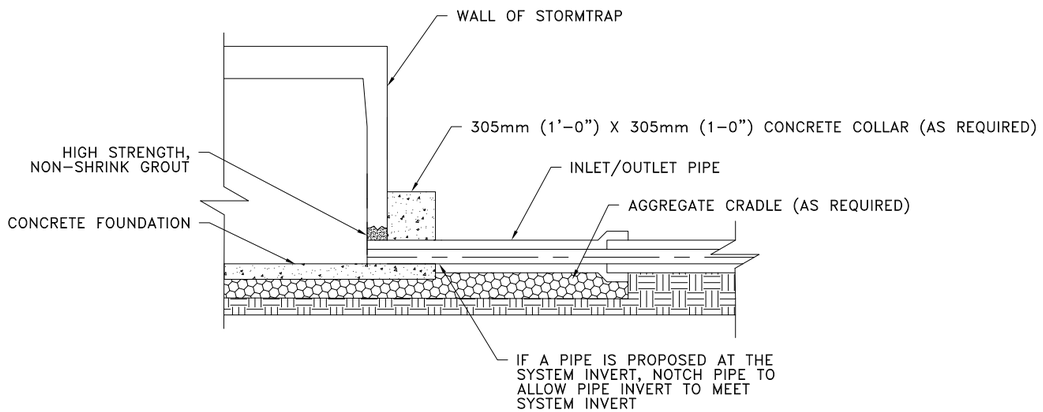

NOTCHED PIPE CONNECTION DETAIL
WHEN PIPE INVERT IS AT
INVERT OF STORMTRAP SYSTEM

StormTrap®
PATENTS LISTED AT: [HTTP://STORMTRAP.COM/PATENT]
1287 WINDHAM PARKWAY
ROMEOVILLE, IL 60446
P:815–941–4549 / F:331–318–5347

ENGINEER INFORMATION:

Stantec
1331 Clyde Avenue
Suite 300
Ottawa, ON
613–722–4420

PROJECT INFORMATION:

Ashbury College

Tank

Ottawa, ON

CURRENT ISSUE DATE:

09/11/2026

ISSUED FOR:

PRELIMINARY

REV.	DATE:	ISSUED FOR:	DWN BY:
1	09/11/20026	PRELIMINARY	LR

SCALE:

NTS

SHEET TITLE:

PIPE / ACCESS OPENING SPECIFICATION

SHEET NUMBER:

5.0

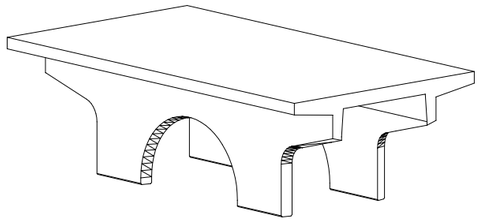

TYPE I

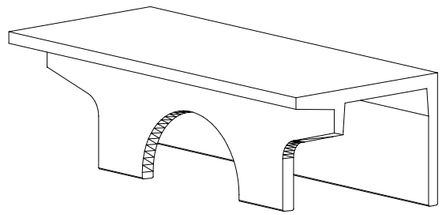

TYPE III

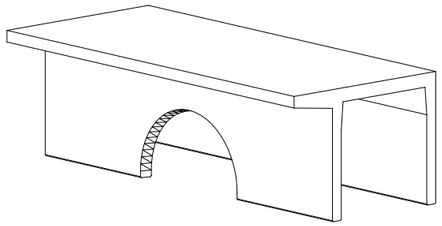

TYPE IV

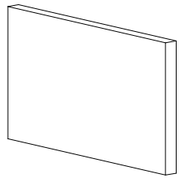

TYPE II
END PANEL

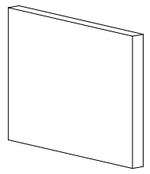

TYPE IV
END PANEL

NOTES:
1. OPENING LOCATIONS AND SHAPES MAY VARY.
2. SP – INDICATES A MODULE WITH MODIFICATIONS.
3. P – INDICATES A MODULE WITH A PANEL ATTACHMENT.
4. POCKET WINDOW OPENINGS ARE OPTIONAL.

StormTrap
PATENTS LISTED AT: [HTTP://STORMTRAP.COM/PATENT]
1287 WINDHAM PARKWAY
ROMEOVILLE, IL 60446
P:815-941-4549 / F:331-318-5347

ENGINEER INFORMATION:

Stantec
1331 Clyde Avenue
Suite 300
Ottawa, ON
613-722-4420

PROJECT INFORMATION:

Ashbury College

Tank

Ottawa, ON

CURRENT ISSUE DATE:

09/11/2026

ISSUED FOR:

PRELIMINARY

REV.	DATE:	ISSUED FOR:	DWN BY:
1	09/11/20026	PRELIMINARY	LR

SCALE:

NTS

SHEET TITLE:

SINGLETRAP
MODULE TYPES

SHEET NUMBER:

6.0

A.4 Table E.2 Groundwater Level Data – Monitoring Wells

TABLE E.2
GROUNDWATER LEVEL DATA - MONITORING WELLS

Well ID	UTM Coordinates		Date	Time	Well Depth			Screen Separation[1]	Top of Casing Elevation (m AMSL)	Ground Surface Elevation (m AMSL)	Pipe Stick-up (m)	Groundwater Level			Vertical Hydraulic Gradient[2]
	Northing	Easting			(m BTOC)	(m BGS)	(m AMSL)	(m)				(m BGS)	(m BTOC)	(m AMSL)	(+) = Upward (-) = Downward
BH25-1	5032793	447061	11-Jul-25 5-Aug-25 18-Aug-25 12-Mar-26	8:18 AM 1:15 PM 10:41 AM 10:45 AM	6.30	6.40	63.90	3.3	70.20	70.30	-0.10	3.31 3.56 3.56 2.14	3.21 3.46 3.46 2.04	66.99 66.75 66.74 68.16	-
BH25-1A	5032795	447058	11-Jul-25 5-Aug-25 18-Aug-25 12-Mar-26	8:05 AM 12:00 AM 10:08 AM 10:55 AM	3.10	3.15	67.16		70.26	70.30	-0.05	- - - 1.07	DRY DRY DRY 1.02	- - - 69.24	
BH25-2	5032798	447109	11-Jul-25 5-Aug-25 18-Aug-25 12-Mar-26	9:32 AM 1:34 PM 11:23 AM -	9.20	9.28	61.32	-	70.52	70.60	-0.08	3.77 3.96 3.95 -	3.69 3.88 3.87 -	66.83 66.65 66.65 -	

Notes:

(1) Vertical distance between the mid-point of the shallow and deep monitoring well screens.
(2) Vertical hydraulic gradient calculated based on the distance between the mid-point of the shallow and deep monitoring well screens.

m BGS = meters below ground surface
m BTOC = meters below top of casing
DRY = no groundwater or surface water was observed in the piezometer or watercourse, respectively
- = measurement not available

A.5 Stormceptor Specifications

Stormceptor

Stormceptor EF Sizing Report

Rinker MATERIALS

Imbrium® Systems
ESTIMATED NET ANNUAL SEDIMENT (TSS) LOAD REDUCTION

09/17/2026

Province:	Ontario
City:	Ottawa
Nearest Rainfall Station:	OTTAWA CDA RCS
Climate Station Id:	6105978
Years of Rainfall Data:	20
Site Name:	OGS1
Drainage Area (ha):	2.41
Runoff Coefficient 'c':	0.67
Particle Size Distribution:	Fine
Target TSS Removal (%):	80.0
Required Water Quality Runoff Volume Capture (%):	90.00
Estimated Water Quality Flow Rate (L/s):	52.12
Oil / Fuel Spill Risk Site?	Yes
Upstream Flow Control?	No
Peak Conveyance (maximum) Flow Rate (L/s):	320.00
Influent TSS Concentration (mg/L):	200
Estimated Average Annual Sediment Load (kg/yr):	1719
Estimated Average Annual Sediment Volume (L/yr):	1398

Project Name:	Ashbury College - Synthetic Turf Field
Project Number:	116501019
Designer Name:	Alyssa Gladish
Designer Company:	Stantec Consulting Ltd.
Designer Email:	alyssa.gladish@stantec.com
Designer Phone:	587-721-1241
EOR Name:	
EOR Company:	
EOR Email:	
EOR Phone:	

Net Annual Sediment (TSS) Load Reduction Sizing Summary

Stormceptor Model	TSS Removal Provided (%)
EFO4	63
EFO5	71
EFO6	77
EFO8	85
EFO10	90
EFO12	94

Recommended Stormceptor EFO Model:	**EFO8**
Estimated Net Annual Sediment (TSS) Load Reduction (%):	**85**
Water Quality Runoff Volume Capture (%):	**> 90**

imbrium

THIRD-PARTY TESTING AND VERIFICATION

►**Stormceptor® EF and Stormceptor® EFO** are the latest evolutions in the Stormceptor® oil-grit separator (OGS) technology series, and are designed to remove a wide variety of pollutants from stormwater and snowmelt runoff. These technologies have been third-party tested in accordance with the Canadian ETV **Procedure for Laboratory Testing of Oil-Grit Separators** and performance has been third-party verified in accordance with the **ISO 14034 Environmental Technology Verification (ETV)** protocol.

PERFORMANCE

►**Stormceptor® EF and EFO** remove stormwater pollutants through gravity separation and floatation, and feature a patent-pending design that generates positive removal of total suspended solids (TSS) throughout each storm event, including high-intensity storms. Captured pollutants include sediment, free oils, and sediment-bound pollutants such as nutrients, heavy metals, and petroleum hydrocarbons. Stormceptor is sized to remove a high level of TSS from the frequent rainfall events that contribute the vast majority of annual runoff volume and pollutant load. The technology incorporates an internal bypass to convey excessive stormwater flows from high-intensity storms through the device without resuspension and washout (scour) of previously captured pollutants. Proper routine maintenance ensures high pollutant removal performance and protection of downstream waterwavs.

PARTICLE SIZE DISTRIBUTION (PSD)

►The **Canadian ETV PSD** shown in the table below was used, or in part, for this sizing. This is the identical PSD that is referenced in the Canadian ETV ***Procedure for Laboratory Testing of Oil-Grit Separators*** for both sediment removal testing and scour testing. The Canadian ETV PSD contains a wide range of particle sizes in the sand and silt fractions, and is considered reasonably representative of the particle size fractions found in typical urban stormwater runoff.

Particle Size (µm)	Percent Less Than	Particle Size Fraction (µm)	Percent
1000	100	500-1000	5
500	95	250-500	5
250	90	150-250	15
150	75	100-150	15
100	60	75-100	10
75	50	50-75	5
50	45	20-50	10
20	35	8-20	15
8	20	5-8	10
5	10	2-5	5
2	5	<2	5

Rainfall Intensity (mm / hr)	Percent Rainfall Volume (%)	Cumulative Rainfall Volume (%)	Flow Rate (L/s)	Flow Rate (L/min)	Surface Loading Rate (L/min/m²)	Removal Efficiency (%)	Incremental Removal (%)	Cumulative Removal (%)
0.50	8.6	8.6	2.15	129.0	27.0	100	8.6	8.6
1.00	20.3	29.0	4.30	258.0	55.0	100	20.3	29.0
2.00	16.2	45.2	8.60	516.0	110.0	95	15.3	44.3
3.00	12.0	57.2	12.90	774.0	165.0	88	10.6	54.9
4.00	8.4	65.6	17.20	1032.0	220.0	82	6.9	61.8
5.00	5.9	71.6	21.50	1290.0	274.0	80	4.7	66.6
6.00	4.6	76.2	25.80	1548.0	329.0	77	3.6	70.1
7.00	3.1	79.3	30.10	1806.0	384.0	75	2.3	72.4
8.00	2.7	82.0	34.40	2064.0	439.0	72	2.0	74.4
9.00	3.3	85.3	38.70	2322.0	494.0	70	2.3	76.7
10.00	2.3	87.6	43.00	2580.0	549.0	67	1.5	78.3
11.00	1.6	89.2	47.30	2838.0	604.0	65	1.0	79.3
12.00	1.3	90.5	51.59	3096.0	659.0	64	0.8	80.1
13.00	1.7	92.2	55.89	3354.0	714.0	64	1.1	81.2
14.00	1.2	93.5	60.19	3612.0	768.0	63	0.8	82.0
15.00	1.2	94.6	64.49	3870.0	823.0	63	0.7	82.7
16.00	0.7	95.3	68.79	4128.0	878.0	63	0.4	83.2
17.00	0.7	96.1	73.09	4386.0	933.0	62	0.5	83.6
18.00	0.4	96.5	77.39	4644.0	988.0	62	0.2	83.9
19.00	0.4	96.9	81.69	4901.0	1043.0	61	0.2	84.1
20.00	0.2	97.1	85.99	5159.0	1098.0	59	0.1	84.3
21.00	0.5	97.5	90.29	5417.0	1153.0	58	0.3	84.5
22.00	0.2	97.8	94.59	5675.0	1208.0	57	0.1	84.7
23.00	1.0	98.8	98.89	5933.0	1262.0	56	0.6	85.2
24.00	0.3	99.1	103.19	6191.0	1317.0	54	0.1	85.4
25.00	0.0	99.1	107.49	6449.0	1372.0	53	0.0	85.4
30.00	0.9	100.0	128.99	7739.0	1647.0	45	0.4	85.8
35.00	0.0	100.0	150.48	9029.0	1921.0	38	0.0	85.8
40.00	0.0	100.0	171.98	10319.0	2196.0	33	0.0	85.8
45.00	0.0	100.0	193.48	11609.0	2470.0	30	0.0	85.8
Estimated Net Annual Sediment (TSS) Load Reduction =								**86 %**

Climate Station ID: 6105978 *Years of Rainfall Data*: 20

RAINFALL DATA FROM OTTAWA CDA RCS RAINFALL STATION

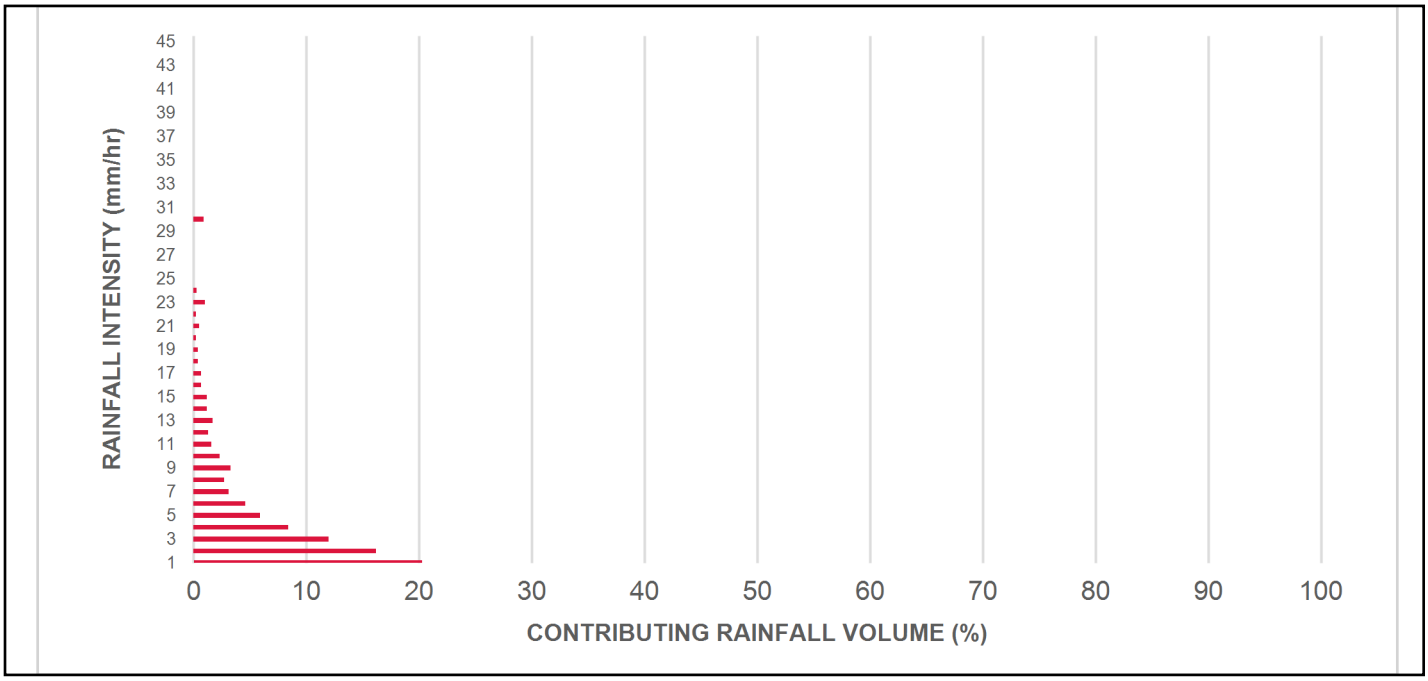

INCREMENTAL AND CUMULATIVE TSS REMOVAL FOR THE RECOMMENDED STORMCEPTOR® MODEL

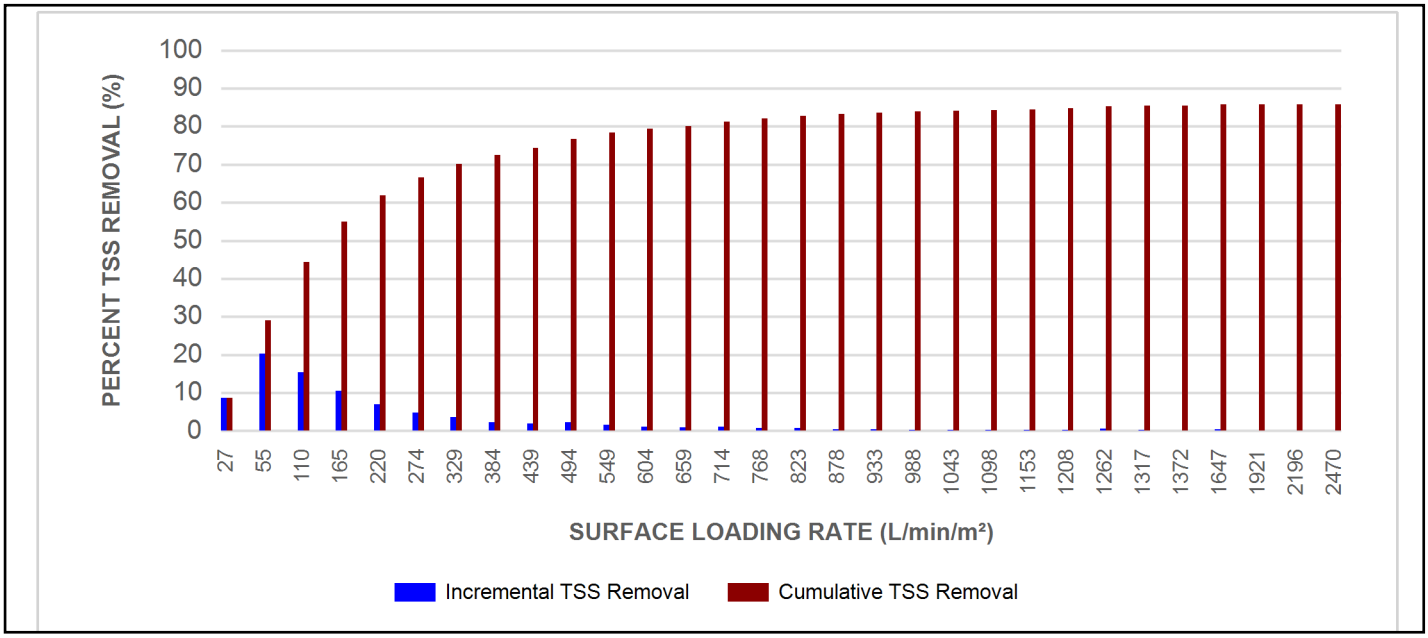

Maximum Pipe Diameter / Peak Conveyance

Stormceptor EF / EFO	Model Diameter		Min Angle Inlet / Outlet Pipes	Max Inlet Pipe Diameter		Max Outlet Pipe Diameter		Peak Conveyance Flow Rate	
	(m)	(ft)		(mm)	(in)	(mm)	(in)	(L/s)	(cfs)
EF4 / EFO4	1.2	4	90	609	24	609	24	425	15
EF5 / EFO5	1.5	5	90	762	30	762	30	710	25
EF6 / EFO6	1.8	6	90	914	36	914	36	990	35
EF8 / EFO8	2.4	8	90	1219	48	1219	48	1700	60
EF10 / EFO10	3.0	10	90	1828	72	1828	72	2830	100
EF12 / EFO12	3.6	12	90	1828	72	1828	72	2830	100

SCOUR PREVENTION AND ONLINE CONFIGURATION

►**Stormceptor® EF and EFO** feature an internal bypass and superior scour prevention technology that have been demonstrated in third-party testing according to the scour testing provisions of the Canadian ETV **Procedure for Laboratory Testing of Oil-Grit Separators**, and the exceptional scour test performance has been third-party verified in accordance with the ISO 14034 ETV protocol. As a result, Stormceptor EF and EFO are approved for online installation, eliminating the need for costly additional bypass structures, piping, and installation expense.

DESIGN FLEXIBILITY

►**Stormceptor® EF** and **EFO** offers design flexibility in one simplified platform, accepting stormwater flow from a single inlet pipe or multiple inlet pipes, and/or surface runoff through an inlet grate. The device can also serve as a junction structure, accommodate a 90-degree inlet-to-outlet bend angle, and can be modified to ensure performance in submerged conditions.

OIL CAPTURE AND RETENTION

►While Stormceptor® EF will capture and retain oil from dry weather spills and low intensity runoff, **Stormceptor® EFO** has demonstrated superior oil capture and greater than 99% oil retention in third-party testing according to the light liquid re-entrainment testing provisions of the Canadian ETV **Procedure for Laboratory Testing of Oil-Grit Separators**. Stormceptor EFO is recommended for sites where oil capture and retention is a requirement.

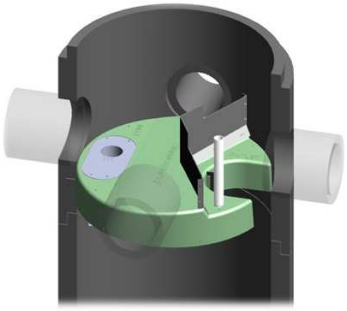

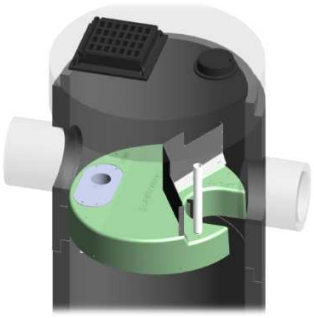

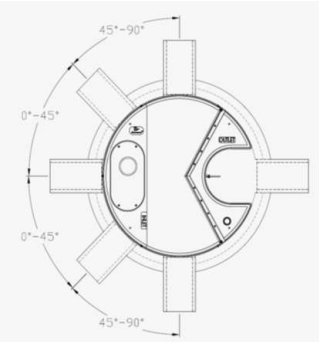

INLET-TO-OUTLET DROP

Elevation differential between inlet and outlet pipe inverts is dictated by the angle at which the inlet pipe(s) enters the unit.
0° - 45° : The inlet pipe is 1-inch (25mm) higher than the outlet pipe.
45° - 90° : The inlet pipe is 2-inches (50mm) higher than the outlet pipe.

HEAD LOSS

The head loss through Stormceptor EF is similar to that of a 60-degree bend structure. The applicable K value for calculating minor losses through the unit is 1.1. For submerged conditions the applicable K value is 3.0.

Pollutant Capacity

Stormceptor EF / EFO	Model Diameter		Depth (Outlet Pipe Invert to Sump Floor)		Oil Volume		Recommended Sediment Maintenance Depth *		Maximum Sediment Volume *		Maximum Sediment Mass **	
	(m)	(ft)	(m)	(ft)	(L)	(Gal)	(mm)	(in)	(L)	(ft^3)	(kg)	(lb)
EF4 / EFO4	1.2	4	1.52	5.0	265	70	203	8	1190	42	1904	5250
EF5 / EFO5	1.5	5	1.62	5.3	420	111	305	10	2124	75	2612	5758
EF6 / EFO6	1.8	6	1.93	6.3	610	160	305	12	3470	123	5552	15375
EF8 / EFO8	2.4	8	2.59	8.5	1070	280	610	24	8780	310	14048	38750
EF10 / EFO10	3.0	10	3.25	10.7	1670	440	610	24	17790	628	28464	78500
EF12 / EFO12	3.6	12	3.89	12.8	2475	655	610	24	31220	1103	49952	137875

*Increased sump depth may be added to increase sediment storage capacity
** Average density of wet packed sediment in sump = 1.6 kg/L (100 lb/ft^3)

Feature	Benefit	Feature Appeals To
Patent-pending enhanced flow treatment and scour prevention technology	Superior, verified third-party performance	Regulator, Specifying & Design Engineer
Third-party verified light liquid capture and retention for EFO version	Proven performance for fuel/oil hotspot locations	Regulator, Specifying & Design Engineer, Site Owner
Functions as bend, junction or inlet structure	Design flexibility	Specifying & Design Engineer
Minimal drop between inlet and outlet	Site installation ease	Contractor
Large diameter outlet riser for inspection and maintenance	Easy maintenance access from grade	Maintenance Contractor & Site Owner

STANDARD STORMCEPTOR EF/EFO DRAWINGS

For standard details, please visit http://www.imbriumsystems.com/stormwater-treatment-solutions/stormceptor-ef

STANDARD STORMCEPTOR EF/EFO SPECIFICATION

For specifications, please visit http://www.imbriumsystems.com/stormwater-treatment-solutions/stormceptor-ef

STANDARD PERFORMANCE SPECIFICATION FOR "OIL GRIT SEPARATOR" (OGS) STORMWATER QUALITY TREAMENT DEVICE

PART 1 – GENERAL

1.1 WORK INCLUDED

This section specifies requirements for selecting, sizing, and designing an underground Oil Grit Separator (OGS) device for stormwater quality treatment, with third-party testing results and a Statement of Verification in accordance with ISO 14034 Environmental Management – Environmental Technology Verification (ETV).

1.2 REFERENCE STANDARDS & PROCEDURES

ISO 14034:2016 Environmental management – Environmental technology verification (ETV)

Canadian Environmental Technology Verification (ETV) Program's **Procedure for Laboratory Testing of Oil-Grit Separators**

1.3 SUBMITTALS

1.3.1 All submittals, including sizing reports & shop drawings, shall be submitted upon request with each order to the contractor then forwarded to the Engineer of Record for review and acceptance. Shop drawings shall detail all OGS components, elevations, and sequence of construction.

1.3.2 Alternative devices shall have features identical to or greater than the specified device, including: treatment chamber diameter, treatment chamber wet volume, sediment storage volume, and oil storage volume.

1.3.3 Unless directed otherwise by the Engineer of Record, OGS stormwater quality treatment product substitutions or alternatives submitted within ten days prior to project bid shall not be accepted. All alternatives or substitutions submitted shall be signed and sealed by a local registered Professional Engineer, based on the exact same criteria detailed in Section 3, in entirety, subject to review and approval by the Engineer of Record.

PART 2 – PRODUCTS

2.1 OGS POLLUTANT STORAGE

The OGS device shall include a sump for sediment storage, and a protected volume for the capture and storage of petroleum hydrocarbons and buoyant gross pollutants. The minimum sediment & petroleum hydrocarbon storage capacity shall be as follows:

2.1.1	4 ft (1219 mm) Diameter OGS Units:	1.19 m^3 sediment / 265 L oil
	5 ft (1524 mm) Diameter OGS Units:	1.95 m^3 sediment / 420 L oil
	6 ft (1829 mm) Diameter OGS Units:	3.48 m^3 sediment / 609 L oil
	8 ft (2438 mm) Diameter OGS Units:	8.78 m^3 sediment / 1,071 L oil
	10 ft (3048 mm) Diameter OGS Units:	17.78 m^3 sediment / 1,673 L oil
	12 ft (3657 mm) Diameter OGS Units:	31.23 m^3 sediment / 2,476 L oil

PART 3 – PERFORMANCE & DESIGN

3.1 GENERAL

The OGS stormwater quality treatment device shall be verified in accordance with ISO 14034:2016 Environmental management – Environmental technology verification (ETV). The OGS stormwater quality treatment device shall remove oil, sediment and gross pollutants from stormwater runoff during frequent wet weather events, and retain these pollutants during less frequent high flow wet weather events below the insert within the OGS for later removal during maintenance. The Manufacturer shall have at least ten (10) years of local experience, history and success in engineering design, manufacturing and production and supply of OGS stormwater quality treatment device systems, acceptable to the Engineer of Record.

3.2 SIZING METHODOLOGY

The OGS device shall be engineered, designed and sized to provide stormwater quality treatment based on treating a minimum of 90 percent of the average annual runoff volume and a minimum removal of an annual average 60% of the sediment (TSS) load based on the Particle Size Distribution (PSD) specified in the sizing report for the specified device. Sizing of the OGS shall be determined by use of a minimum ten (10) years of local historical rainfall data provided by Environment Canada. Sizing shall also be determined by use of the sediment removal performance data derived from the ISO 14034 ETV third-party verified laboratory testing data from testing conducted in accordance with the Canadian ETV protocol Procedure for Laboratory Testing of Oil-Grit Separators, as follows:

3.2.1 Sediment removal efficiency for a given surface loading rate and its associated flow rate shall be based on sediment removal efficiency demonstrated at the seven (7) tested surface loading rates specified in the protocol, ranging 40 L/min/m^2 to 1400 L/min/m^2, and as stated in the ISO 14034 ETV Verification Statement for the OGS device.

3.2.2 Sediment removal efficiency for surface loading rates between 40 L/min/m^2 and 1400 L/min/m^2 shall be based on linear interpolation of data between consecutive tested surface loading rates.

3.2.3 Sediment removal efficiency for surface loading rates less than the lowest tested surface loading rate of 40 L/min/m^2 shall be assumed to be identical to the sediment removal efficiency at 40 L/min/m^2. No extrapolation shall be allowed that results in a sediment removal efficiency that is greater than that demonstrated at 40 L/min/m^2.

3.2.4 Sediment removal efficiency for surface loading rates greater than the highest tested surface loading rate of 1400 L/min/m^2 shall assume zero sediment removal for the portion of flow that exceeds 1400 L/min/m^2, and shall be calculated using a simple proportioning formula, with 1400 L/min/m^2 in the numerator and the higher surface loading rate in the denominator, and multiplying the resulting fraction times the sediment removal efficiency at 1400 L/min/m^2.

The OGS device shall also have sufficient annual sediment storage capacity as specified and calculated in Section 2.1.

3.3 CANADIAN ETV or ISO 14034 ETV VERIFICATION OF SCOUR TESTING

The OGS device shall have Canadian ETV or ISO 14034 ETV Verification of third-party scour testing conducted in accordance with the Canadian ETV Program's **Procedure for Laboratory Testing of Oil-Grit Separators.**

3.3.1 To be acceptable for on-line installation, the OGS device must demonstrate an average scour test effluent concentration less than 10 mg/L at each surface loading rate tested, up to and including 2600 L/min/m^2.

3.4 LIGHT LIQUID RE-ENTRAINMENT SIMULATION TESTING

The OGS device shall have Canadian ETV or ISO 14034 ETV Verification of completed third-party Light Liquid

Re-entrainment Simulation Testing in accordance with the Canadian ETV **Program's Procedure for Laboratory Testing of Oil-Grit Separators,** with results reported within the Canadian ETV or ISO 14034 ETV verification. This re-entrainment testing is conducted with the device pre-loaded with low density polyethylene (LDPE) plastic beads as a surrogate for light liquids such as oil and fuel. Testing is conducted on the same OGS unit tested for sediment removal to assess whether light liquids captured after a spill are effectively retained at high flow rates.

3.4.1 For an OGS device to be an acceptable stormwater treatment device on a site where vehicular traffic occurs and the potential for an oil or fuel spill exists, the OGS device must have reported verified performance results of greater than 99% cumulative retention of LDPE plastic beads for the five specified surface loading rates (ranging 200 L/min/m^2 to 2600 L/min/m^2) in accordance with the Light Liquid Re-entrainment Simulation Testing within the Canadian ETV Program's **Procedure for Laboratory Testing of Oil-Grit Separators.** However, an OGS device shall not be allowed if the Light Liquid Re-entrainment Simulation Testing was performed with screening components within the OGS device that are effective at retaining the LDPE plastic beads, but would not be expected to retain light liquids such as oil and fuel.

DRAWING NOT TO BE USED FOR CONSTRUCTION

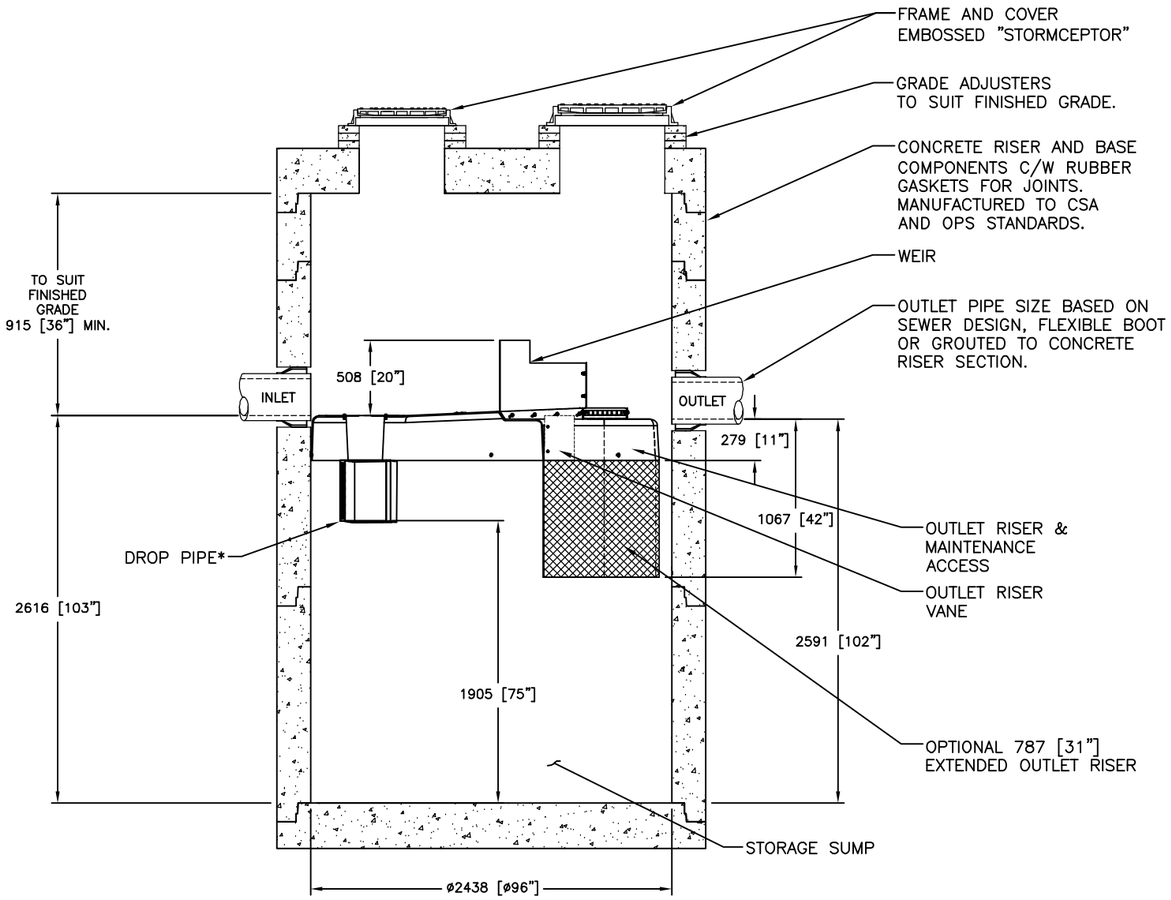

SECTION VIEW

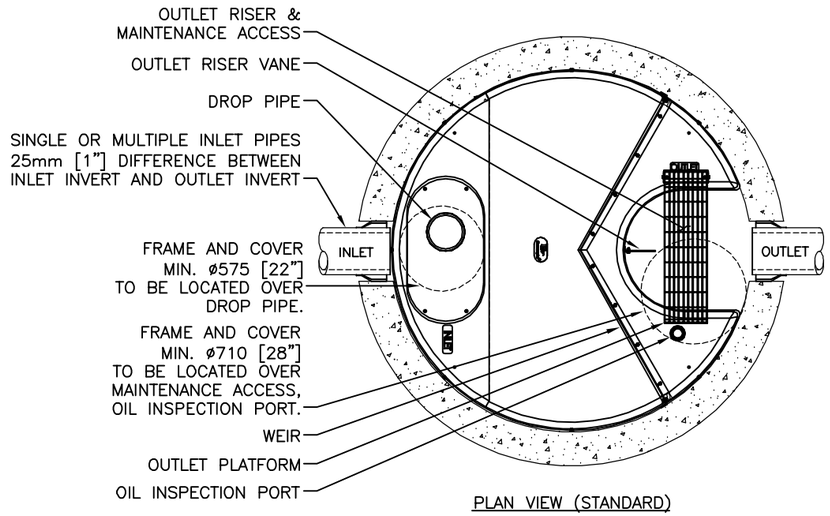

PLAN VIEW (STANDARD)

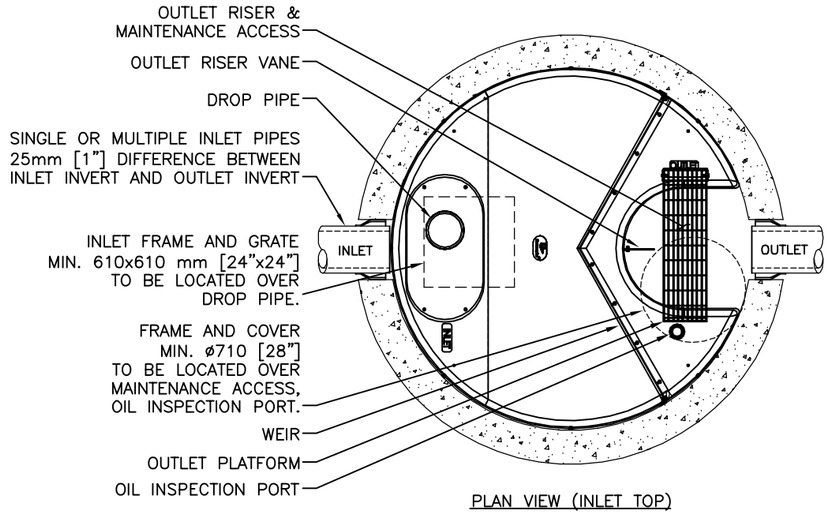

PLAN VIEW (INLET TOP)

GENERAL NOTES:

* MAXIMUM SURFACE LOADING RATE (SLR) INTO LOWER CHAMBER THROUGH DROP PIPE IS 1135 L/min/m^2 (27.9 gpm/ft^2) FOR STORMCEPTOR EF8 AND 535 L/min/m^2 (13.1 gpm/ft^2) FOR STORMCEPTOR EFO8 (OIL CAPTURE CONFIGURATION).

1. ALL DIMENSIONS INDICATED ARE IN MILLIMETERS (INCHES) UNLESS OTHERWISE SPECIFIED.
2. STORMCEPTOR STRUCTURE INLET AND OUTLET PIPE SIZE AND ORIENTATION SHOWN FOR INFORMATIONAL PURPOSES ONLY.
3. UNLESS OTHERWISE NOTED, BYPASS INFRASTRUCTURE, SUCH AS ALL UPSTREAM DIVERSION STRUCTURES, CONNECTING STRUCTURES, OR PIPE CONDUITS CONNECTING TO COMPLETE THE STORMCEPTOR SYSTEM SHALL BE PROVIDED AND ADDRESSED SEPARATELY.
4. DRAWING FOR INFORMATION PURPOSES ONLY. REFER TO ENGINEER'S SITE/UTILITY PLAN FOR STRUCTURE ORIENTATION.
5. NO PRODUCT SUBSTITUTIONS SHALL BE ACCEPTED UNLESS SUBMITTED 10 DAYS PRIOR TO PROJECT BID DATE, OR AS DIRECTED BY THE ENGINEER OF RECORD.

INSTALLATION NOTES

A. ANY SUB-BASE, BACKFILL DEPTH, AND/OR ANTI-FLOTATION PROVISIONS ARE SITE-SPECIFIC DESIGN CONSIDERATIONS AND SHALL BE SPECIFIED BY ENGINEER OF RECORD.
B. CONTRACTOR TO PROVIDE EQUIPMENT WITH SUFFICIENT LIFTING AND REACH CAPACITY TO LIFT AND SET THE STRUCTURE (LIFTING CLUTCHES PROVIDED)
C. CONTRACTOR WILL INSTALL AND LEVEL THE STRUCTURE, SEALING THE JOINTS, LINE ENTRY AND EXIT POINTS (NON-SHRINK GROUT WITH APPROVED WATERSTOP OR FLEXIBLE BOOT)
D. CONTRACTOR TO TAKE APPROPRIATE MEASURES TO PROTECT THE DEVICE FROM CONSTRUCTION-RELATED EROSION RUNOFF.
E. DEVICE ACTIVATION, BY CONTRACTOR, SHALL OCCUR ONLY AFTER SITE HAS BEEN STABILIZED AND THE STORMCEPTOR UNIT IS CLEAN AND FREE OF DEBRIS.

FOR SITE SPECIFIC DRAWINGS PLEASE CONTACT YOUR LOCAL STORMCEPTOR REPRESENTATIVE. SITE SPECIFIC DRAWINGS ARE BASED ON THE BEST AVAILABLE INFORMATION AT THE TIME. SOME FIELD REVISIONS TO THE SYSTEM LOCATION OR CONNECTION PIPING MAY BE NECESSARY BASED ON AVAILABLE SPACE OR SITE CONFIGURATION REVISIONS. ELEVATIONS SHOULD BE MAINTAINED EXCEPT WHERE NOTED ON BYPASS STRUCTURE (IF REQUIRED).

STANDARD DETAIL
NOT FOR CONSTRUCTION

SITE SPECIFIC DATA REQUIREMENTS

STORMCEPTOR MODEL	EFO8				
STRUCTURE ID					*
HYDROCARBON STORAGE REQ'D (L)					*
WATER QUALITY FLOW RATE (L/s)					*
PEAK FLOW RATE (L/s)					*
RETURN PERIOD OF PEAK FLOW (yrs)					*
DRAINAGE AREA (HA)					*
DRAINAGE AREA IMPERVIOUSNESS (%)					*
PIPE DATA:	I.E.	MAT'L	DIA	SLOPE %	HGL
INLET #1	*	*	*	*	*
INLET #2	*	*	*	*	*
OUTLET	*	*	*	*	*

* PER ENGINEER OF RECORD

The design and information shown on this drawing is provided as a service to the project owner, engineer and contractor by Imbrium Systems ("Imbrium"). Neither this drawing, nor any part thereof, may be used, reproduced or modified in any manner without the prior written consent of Imbrium. Failure to comply is done at the user's own risk and Imbrium expressly disclaims any liability or responsibility for such use.

If discrepancies between the supplied information upon which this drawing is based and actual conditions are encountered, these discrepancies must be reported to Imbrium immediately for re-evaluation of the design. Imbrium accepts no liability for design based on inaccurate, incomplete or inaccurate information supplied by others.

MARK	DATE	REVISION DESCRIPTION	BY
1	6/8/18	OUTLET PLATFORM	JSK
0	5/26/17	INITIAL RELEASE	JSK

Stormceptor® EF

SCALE = NTS

imbrium®
407 FAIRVIEW DRIVE, WHITBY, ON L1N 9A9
TF 800-565-6801 CA 416-665-8600 INTL +1-416-665-8600

DATE:	10/13/2017
DESIGNED: JSK	DRAWN: JSK
CHECKED: BSF	APPROVED: *
PROJECT No.: EFO8	SEQUENCE No.: *
SHEET:	1 OF 1

I:\IMBRIUM\PRODUCTS\STORMCEPTOR EF\40 DRAWINGS & DETAILS\STANDARD DETAILS\EFO8 STANDARD DETAILS\EFO8-DETAIL.DWG 4/12/2019 11:07 AM

A.6 Storm Sewer Design Sheet

Stantec

Ashbury College Synthetic Turf

DATE: 2026-11-13
REVISION: 1
DESIGNED BY: MJS
CHECKED BY: AG

FILE NUMBER: **116501019**

STORM SEWER DESIGN SHEET
(City of Ottawa)

DESIGN PARAMETERS

$I = a / (t+b)^c$ (As per City of Ottawa Guidelines, 2012)

	1:2 yr	1:5 yr	1:10 yr	1:100 yr
a =	732.951	998.071	1174.184	1735.688
b =	6.199	6.053	6.014	6.014
c =	0.810	0.814	0.816	0.820

MANNING'S n = 0.013
MINIMUM COVER: 2.00 m
TIME OF ENTRY 10 min
BEDDING CLASS = B

LOCATION			DRAINAGE AREA																				PIPE SELECTION											
AREA ID NUMBER	FROM M.H.	TO M.H.	AREA (2-YEAR) (ha)	AREA (5-YEAR) (ha)	AREA (10-YEAR) (ha)	AREA (100-YEAR) (ha)	AREA (ROOF) (ha)	C (2-YEAR) (-)	C (5-YEAR) (-)	C (10-YEAR) (-)	C (100-YEAR) (-)	A x C (2-YEAR) (ha)	ACCUM AxC (2YR) (ha)	A x C (5-YEAR) (ha)	ACCUM. AxC (5YR) (ha)	A x C (10-YEAR) (ha)	ACCUM. AxC (10YR) (ha)	A x C (100-YEAR) (ha)	ACCUM. AxC (100YR) (ha)	T of C (min)	$I_{2\text{-YEAR}}$ (mm/h)	$I_{5\text{-YEAR}}$ (mm/h)	$I_{10\text{-YEAR}}$ (mm/h)	$I_{100\text{-YEAR}}$ (mm/h)	$Q_{CONTROL}$ (L/s)	ACCUM. $Q_{CONTROL}$ (L/s)	Q_{ACT} (CIA/360) (L/s)	LENGTH (m)	PIPE WIDTH OR DIAMETEI (mm)	PIPE HEIGHT (mm)	PIPE SHAPE (-)	MATERIAL (-)	CLASS (-)	SLOPE %	Q_{CAP} (FULL) (L/s)	% FULL (-)	VEL. (FULL) (m/s)	VEL. (ACT) (m/s)	TIME OF FLOW (min)
L4A, L4B, L4C, L4D	EX 4	105	0.59	0.00	0.00	0.00	0.00	0.47	0.00	0.00	0.00	0.272	0.272	0.000	0.000	0.000	0.000	0.000	0.000	10.00	76.81	104.19	122.14	178.56	0.0	0.0	58.1	66.4	375	375	CIRCULAR	PVC	-	1.75	218.1	**26.65%**	2.07	1.47	0.75
	105	102	0.00	0.00	0.00	0.00	0.00	0.00	0.00	0.00	0.00	0.000	0.272	0.000	0.000	0.000	0.000	0.000	0.000	10.75	74.03	100.38	117.65	171.96	0.0	0.0	56.0	41.6	375	375	CIRCULAR	CONCRETE	-	0.50	116.6	**48.06%**	1.11	0.94	0.74
																				11.49																		
L104A, FIELD 1	103	102	1.52	0.00	0.00	0.00	0.00	0.75	0.00	0.00	0.00	1.145	1.145	0.000	0.000	0.000	0.000	0.000	0.000	10.00	76.81	104.19	122.14	178.56	0.0	0.0	244.4	22.6	525	525	CIRCULAR	CONCRETE	-	0.50	317.2	**77.03%**	1.42	1.38	0.27
	102	101B	0.00	0.00	0.00	0.00	0.00	0.00	0.00	0.00	0.00	0.000	1.418	0.000	0.000	0.000	0.000	0.000	0.000	11.77	70.63	95.71	112.15	163.88	0.0	0.0	278.2	17.1	525	525	CIRCULAR	CONCRETE	-	1.00	448.7	**62.00%**	2.01	1.84	0.16
	101B	TANK IN	0.00	0.00	0.00	0.00	0.00	0.00	0.00	0.00	0.00	0.000	1.418	0.000	0.000	0.000	0.000	0.000	0.000	11.92	70.14	95.03	111.36	162.72	0.0	0.0	276.2	2.2	525	525	CIRCULAR	CONCRETE	-	1.00	448.7	**61.57%**	2.01	1.82	0.02
L102A	TANK OUT	101A	0.30	0.00	0.00	0.00	0.00	0.64	0.00	0.00	0.00	0.195	1.613	0.000	0.000	0.000	0.000	0.000	0.000	11.94	70.08	94.95	111.25	162.57	46.0	46.0	46.0	1.5	525	525	CIRCULAR	CONCRETE	-	0.26	228.8	**20.11%**	1.02	0.66	0.04
	101A	OGS	0.00	0.00	0.00	0.00	0.00	0.00	0.00	0.00	0.00	0.000	1.613	0.000	0.000	0.000	0.000	0.000	0.000	11.98	69.96	94.79	111.06	162.29	0.0	46.0	46.0	4.1	525	525	CIRCULAR	CONCRETE	-	0.27	233.1	**19.73%**	1.04	0.68	0.10
	OGS	100	0.00	0.00	0.00	0.00	0.00	0.00	0.00	0.00	0.00	0.000	1.613	0.000	0.000	0.000	0.000	0.000	0.000	12.08	69.65	94.36	110.56	161.55	0.0	46.0	46.0	9.9	525	525	CIRCULAR	CONCRETE	-	0.30	245.7	**18.72%**	1.10	0.70	0.24
																				12.31																		

A.7 Sample PCSWMM Input and Output Files

```
[TITLE]
;;Project Title/Notes

[OPTIONS]
;;Option             Value
FLOW_UNITS           LPS
INFILTRATION         HORTON
FLOW_ROUTING         DYNWAVE
LINK_OFFSETS         ELEVATION
MIN_SLOPE            0
ALLOW_PONDING        NO
SKIP_STEADY_STATE    NO

START_DATE           10/30/2026
START_TIME           00:00:00
REPORT_START_DATE    10/30/2026
REPORT_START_TIME    00:00:00
END_DATE             10/31/2026
END_TIME             12:00:00
SWEEP_START          01/01
SWEEP_END            12/31
DRY_DAYS             0
REPORT_STEP          00:01:00
WET_STEP             00:01:00
DRY_STEP             00:01:00
ROUTING_STEP         2
RULE_STEP            00:00:00

INERTIAL_DAMPING     PARTIAL
NORMAL_FLOW_LIMITED  BOTH
FORCE_MAIN_EQUATION  H-W
VARIABLE_STEP        0
LENGTHENING_STEP     0
MIN_SURFAREA         0
MAX_TRIALS           8
HEAD_TOLERANCE       0.0015
SYS_FLOW_TOL         5
LAT_FLOW_TOL         5
MINIMUM_STEP         0.5
```

```
THREADS              8

[EVAPORATION]
;;Data Source    Parameters
;;-------------- ----------------
CONSTANT         0.0
DRY_ONLY         NO

[RAINGAGES]
;;Name           Format    Interval SCF      Source
;;-------------- --------- -------- -------- ----------
100-YEAR         INTENSITY 0:10     1.0      TIMESERIES CHI_100
100-YEAR+20      INTENSITY 0:10     1.0      TIMESERIES CHI_120
2-YEAR           INTENSITY 0:10     1.0      TIMESERIES CHI_002

[SUBCATCHMENTS]
;;Name           Rain Gage        Outlet           Area     %Imperv  Width    %Slope   CurbLen  SnowPack

;;-------------- ---------------- ---------------- -------- -------- -------- -------- --------
----------------
;0.78
FIELD_1          100-YEAR         FIELD_GRANULARS  1.19769  78       269.48   1        0

;0.64
L102A            100-YEAR         EX1_(C-DRAN)     0.304607 64       68.537   2        0

;0.65
L104A            100-YEAR         104_(C-STRM)     0.324927 65       73.109   2        0

;0.47
L4A              100-YEAR         4_(C-STRM)       0.121408 47       27.317   2        0

;0.34
L4B              100-YEAR         4A_(C-DRAN)      0.329325 34       74.098   2        0

;0.95
L4C              100-YEAR         4_(C-STRM)       0.064509 95       14.515   1        0

;0.53
```

```
L4D              100-YEAR         4B_(C-STRM)      0.072512 53       16.315   2        0


[SUBAREAS]
;;Subcatchment   N-Imperv   N-Perv     S-Imperv   S-Perv     PctZero    RouteTo    PctRouted
;;-------------- ---------- ---------- ---------- ---------- ---------- ---------- ----------
FIELD_1          0.013      0.25       1.57       4.67       0          OUTLET
L102A            0.013      0.25       1.57       4.67       0          OUTLET
L104A            0.013      0.25       1.57       4.67       0          OUTLET
L4A              0.013      0.25       1.57       4.67       0          OUTLET
L4B              0.013      0.25       1.57       4.67       0          OUTLET
L4C              0.013      0.25       1.57       4.67       0          OUTLET
L4D              0.013      0.25       1.57       4.67       0          OUTLET

[INFILTRATION]
;;Subcatchment   Param1     Param2     Param3     Param4     Param5
;;-------------- ---------- ---------- ---------- ---------- ----------
FIELD_1          76.2       13.2       4.14       7          0
L102A            76.2       13.2       4.14       7          0
L104A            76.2       13.2       4.14       7          0
L4A              76.2       13.2       4.14       7          0
L4B              76.2       13.2       4.14       7          0
L4C              76.2       13.2       4.14       7          0
L4D              76.2       13.2       4.14       7          0

[JUNCTIONS]
;;Name           Elevation  MaxDepth   InitDepth  SurDepth   Aponded
;;-------------- ---------- ---------- ---------- ---------- ----------
J1               68.669     1.8        0          0          0

[OUTFALLS]
;;Name           Elevation  Type       Stage Data       Gated    Route To
;;-------------- ---------- ---------- ---------------- -------- ----------------
;1500mm
100_(C-STRM)     67.47      FIXED      67.935           NO
SPRINGFIELD      69.72      FREE                        NO

[STORAGE]
;;Name           Elev.    MaxDepth   InitDepth  Shape       Curve Name/Params            SurDepth Fevap
```

```
Psi      Ksat     IMD
;;-------------- -------- ---------- ---------- ---------- ---------------------------- -------- --------
-------- -------- --------
;1200mm_69.858
101A             67.52    2.83       0.415      FUNCTIONAL  0         0         1.13     0        0
;1200mm
102_(C-STRM)     67.783   2.567      0.152      FUNCTIONAL  0         0         1.13     0        0
;1200mm
103_(C-STRM)     67.956   3.755      0          FUNCTIONAL  0         0         1.13     0        0
;CB_69.55
104_(C-STRM)     68.267   2.083      0          FUNCTIONAL  0         0         0.36     0        0
;1200mm
105_(C-STRM)     68.34    2.064      0          FUNCTIONAL  0         0         1.13     0        0
;1200mm
4_(C-STRM)       69.59    1.12       0          FUNCTIONAL  0         0         1.13     0        0
;1200mm_70.35
4A_(C-DRAN)      68.8     1.79       0          FUNCTIONAL  0         0         1.13     0        0
;CB_71.40
4B_(C-STRM)      70.02    1.88       0          FUNCTIONAL  0         0         0.36     0        0
;CB_69.49
EX1_(C-DRAN)     68.11    1.88       0          FUNCTIONAL  0         0         0.36     0        0
FIELD_GRANULARS  69.327   1.173      0          TABULAR     Granular_Field               0        0
;OGS_69.876
OGS              67.502   2.848      0.455      FUNCTIONAL  0         0         0        0        0
STORMTRAP        67.56    2.79       0.375      TABULAR     StormTrap+Surface             0       0
;1800mm
TANK_IN_(C-STRM) 67.58    2.77       0.353      FUNCTIONAL  0         0         1.13     0        0

[CONDUITS]
;;Name           From Node        To Node          Length     Roughness  InOffset   OutOffset  InitFlow
MaxFlow
;;-------------- ---------------- ---------------- ---------- ---------- ---------- ---------- ----------
----------
C1A              STORMTRAP        101A             6          0.013      67.56      67.53      0
0
C1B              TANK_IN_(C-STRM) STORMTRAP        2.2        0.013      67.58      67.56      0
0
C2               EX1_(C-DRAN)     STORMTRAP        1.5        0.013      68.76      68.74      0
0
```

```
C3               STORMTRAP        SPRINGFIELD      3.5        0.024      69.85      69.72      0
0
C4               FIELD_GRANULARS  104_(C-STRM)     3.5        0.024      70.5       70.1       0
0
C5               4A_(C-DRAN)      EX1_(C-DRAN)     82         0.024      70.39      69.6       0
0
C6               4B_(C-STRM)      4A_(C-DRAN)      19.8       0.024      71.72      70.59      0
0
;375mm
Pipe_10_(C-STRM)_1 4_(C-STRM)     J1               52.346     0.013      69.59      68.669     0
0
;375mm
Pipe_10_(C-STRM)_2 J1             105_(C-STRM)     14.055     0.013      68.669     68.43      0
0
;200mm
Pipe_11_(C-STRM)_1 4A_(C-DRAN)    J1               3.5        0.013      68.8       68.676     0
0
;300mm
Pipe_13_(C-STRM) 104_(C-STRM)     103_(C-STRM)     17.083     0.013      68.267     68.18      0
0
;525mm
Pipe_3_(C-STRM)_2 OGS             100_(C-STRM)     8.796      0.013      67.502     67.473     0
0
;525mm
Pipe_4_(1)_(C-STRM) 103_(C-STRM)  102_(C-STRM)     22.56      0.013      67.956     67.84      0
0
;525mm
Pipe_4_(C-STRM)  STORMTRAP        101A             6.021      0.013      67.56      67.556     0
0
;525mm
Pipe_5_(1)_(C-STRM) 102_(C-STRM)  TANK_IN_(C-STRM) 17.105     0.013      67.783     67.61      0
0
;375mm
Pipe_8_(C-STRM)  105_(C-STRM)     102_(C-STRM)     41.618     0.013      68.34      68.13      0
0

[ORIFICES]
;;Name           From Node        To Node          Type         Offset     Qcoeff     Gated    CloseTime
;;-------------- ---------------- ---------------- ------------ ---------- ---------- -------- ----------
```

```
OR1              101A             OGS              SIDE         67.525     0.572      NO       0
OR2              4B_(C-STRM)      4A_(C-DRAN)      SIDE         70.02      0.572      NO       0
OR3              FIELD_GRANULARS  103_(C-STRM)     SIDE         69.327     0.61       NO       0

[XSECTIONS]
;;Link           Shape        Geom1            Geom2      Geom3      Geom4      Barrels    Culvert
;;-------------- ------------ ---------------- ---------- ---------- ---------- ---------- ----------
C1A              CIRCULAR     0.525            0          0          0          1
C1B              CIRCULAR     0.525            0          0          0          1
C2               CIRCULAR     0.25             0          0          0          1
C3               TRAPEZOIDAL  1                5          10         10         1
C4               TRAPEZOIDAL  1                5          10         10         1
C5               TRAPEZOIDAL  1                5          10         10         1
C6               TRAPEZOIDAL  1                5          10         10         1
Pipe_10_(C-STRM)_1 CIRCULAR   0.375            0          0          0          1
Pipe_10_(C-STRM)_2 CIRCULAR   0.375            0          0          0          1
Pipe_11_(C-STRM)_1 CIRCULAR   0.2              0          0          0          1
Pipe_13_(C-STRM) CIRCULAR     0.3              0          0          0          1
Pipe_3_(C-STRM)_2 CIRCULAR    0.525            0          0          0          1
Pipe_4_(1)_(C-STRM) CIRCULAR  0.525            0          0          0          1
Pipe_4_(C-STRM)  CIRCULAR     0.525            0          0          0          1
Pipe_5_(1)_(C-STRM) CIRCULAR  0.525            0          0          0          1
Pipe_8_(C-STRM)  CIRCULAR     0.375            0          0          0          1
OR1              CIRCULAR     0.127            0          0          0
OR2              CIRCULAR     0.098            0          0          0
OR3              CIRCULAR     0.3              0          0          0

[LOSSES]
;;Link           Kentry     Kexit      Kavg       Flap Gate  Seepage
;;-------------- ---------- ---------- ---------- ---------- ----------
C1A              0          0.022      0          NO         0
C1B              0          0.157      0          NO         0
C2               0          1.344      0          NO         0
Pipe_10_(C-STRM)_1 0        0.021      0          NO         0
Pipe_10_(C-STRM)_2 0        1.344      0          NO         0
Pipe_11_(C-STRM)_1 0        1.344      0          NO         0
Pipe_13_(C-STRM) 0          1.204      0          NO         0
Pipe_3_(C-STRM)_2 0         1.344      0          NO         0
Pipe_4_(1)_(C-STRM) 0       1.344      0          NO         0
```

```
Pipe_4_(C-STRM)  0          0.042      0          NO         0
Pipe_5_(1)_(C-STRM) 0       0.042      0          NO         0
Pipe_8_(C-STRM)  0          1.344      0          NO         0

[CURVES]
;;Name           Type       X-Value    Y-Value
;;-------------- ---------- ---------- ----------
Granular_Field   Storage    0          0
Granular_Field              0.3        0
Granular_Field              0.4        0
Granular_Field              0.401      2694
Granular_Field              0.7        2694
Granular_Field              0.701      0
Granular_Field              0.773      0
Granular_Field              1.173      0

StormTrap+Surface Storage    0          464.1
StormTrap+Surface            0.05       464.1
StormTrap+Surface            0.1        464.1
StormTrap+Surface            0.15       464.1
StormTrap+Surface            0.2        464.1
StormTrap+Surface            0.25       464.1
StormTrap+Surface            0.3        464.1
StormTrap+Surface            0.35       464.1
StormTrap+Surface            0.4        464.1
StormTrap+Surface            0.45       464.1
StormTrap+Surface            0.5        464.1
StormTrap+Surface            0.55       464.1
StormTrap+Surface            0.6        464.1
StormTrap+Surface            0.65       464.1
StormTrap+Surface            0.7        464.1
StormTrap+Surface            0.75       464.1
StormTrap+Surface            0.8        464.1
StormTrap+Surface            0.85       464.1
StormTrap+Surface            0.9        464.1
StormTrap+Surface            0.95       464.1
StormTrap+Surface            1          464.1
StormTrap+Surface            1.05       464.1
StormTrap+Surface            1.1        464.1
```

```
StormTrap+Surface            1.15       464.1
StormTrap+Surface            1.2        464.1
StormTrap+Surface            1.25       464.1
StormTrap+Surface            1.295      464.1
StormTrap+Surface            1.296      0.36
StormTrap+Surface            1.345      0.36
StormTrap+Surface            1.395      0.36
StormTrap+Surface            1.445      0.36
StormTrap+Surface            1.495      0.36
StormTrap+Surface            1.545      0.36
StormTrap+Surface            1.595      0.36
StormTrap+Surface            1.645      0.36
StormTrap+Surface            1.695      0.36
StormTrap+Surface            1.745      0.36
StormTrap+Surface            1.795      0.36
StormTrap+Surface            1.845      0.36
StormTrap+Surface            1.895      0.36
StormTrap+Surface            1.93       0.36
StormTrap+Surface            1.945      0.36
StormTrap+Surface            1.99       0.36
StormTrap+Surface            2.04       0.36
StormTrap+Surface            2.05       0.36
StormTrap+Surface            2.051      90.4
StormTrap+Surface            2.09       243.1
StormTrap+Surface            2.14       546.9
StormTrap+Surface            2.19       972.3
StormTrap+Surface            2.24       1512
StormTrap+Surface            2.29       2187.7
StormTrap+Surface            2.2901     0
StormTrap+Surface            2.79       0

[TIMESERIES]
;;Name           Date       Time       Value
;;-------------- ---------- ---------- ----------
CHI_002                     0:00       0
CHI_002                     0:10       2.81
CHI_002                     0:20       3.5
CHI_002                     0:30       4.69
CHI_002                     0:40       7.3
```

```
CHI_002                 0:50       18.21
CHI_002                 1:00       76.81
CHI_002                 1:10       24.08
CHI_002                 1:20       12.36
CHI_002                 1:30       8.32
CHI_002                 1:40       6.3
CHI_002                 1:50       5.09
CHI_002                 2:00       4.29
CHI_002                 2:10       3.72
CHI_002                 2:20       3.29
CHI_002                 2:30       2.95
CHI_002                 2:40       2.68
CHI_002                 2:50       2.46
CHI_002                 3:00       2.28

CHI_100                 0:00       0
CHI_100                 0:10       6.05
CHI_100                 0:20       7.54
CHI_100                 0:30       10.16
CHI_100                 0:40       15.97
CHI_100                 0:50       40.65
CHI_100                 1:00       178.56
CHI_100                 1:10       54.05
CHI_100                 1:20       27.32
CHI_100                 1:30       18.24
CHI_100                 1:40       13.74
CHI_100                 1:50       11.06
CHI_100                 2:00       9.29
CHI_100                 2:10       8.02
CHI_100                 2:20       7.08
CHI_100                 2:30       6.35
CHI_100                 2:40       5.76
CHI_100                 2:50       5.28
CHI_100                 3:00       4.88

CHI_120                 0:00       0
CHI_120                 0:10       7.26
CHI_120                 0:20       9.048
CHI_120                 0:30       12.192
```

```
CHI_120                 0:40       19.164
CHI_120                 0:50       48.78
CHI_120                 1:00       214.272
CHI_120                 1:10       64.86
CHI_120                 1:20       32.784
CHI_120                 1:30       21.888
CHI_120                 1:40       16.488
CHI_120                 1:50       13.272
CHI_120                 2:00       11.148
CHI_120                 2:10       9.624
CHI_120                 2:20       8.496
CHI_120                 2:30       7.62
CHI_120                 2:40       6.912
CHI_120                 2:50       6.336
CHI_120                 3:00       5.856

[REPORT]
;;Reporting Options
INPUT      YES
CONTROLS   NO
SUBCATCHMENTS ALL
NODES ALL
LINKS ALL

[TAGS]
Node       J1               NULL
Node       100_(C-STRM)     STM_MH
Node       101A             STM_MH
Node       102_(C-STRM)     STM_MH
Node       103_(C-STRM)     STM_MH
Node       104_(C-STRM)     CB
Node       105_(C-STRM)     STM_MH
Node       4_(C-STRM)       CBMH
Node       4A_(C-DRAN)      CBMH
Node       4B_(C-STRM)      CB
Node       EX1_(C-DRAN)     CB
Node       FIELD_GRANULARS  STORAGE
Node       OGS              STM_MH
Node       STORMTRAP        STORAGE
```

```
Node       TANK_IN_(C-STRM) STM_MH
Link       C3               Overland
Link       C4               Overland
Link       C5               Overland
Link       C6               Overland

[MAP]
DIMENSIONS       369069.19015     5034380.03035    369284.41285     5034620.83465
UNITS            Meters

--
```

EPA STORM WATER MANAGEMENT MODEL - VERSION 5.2 (Build 5.2.4)

****
Element Count
****
Number of rain gages 3
Number of subcatchments ... 7
Number of nodes 16
Number of links 19
Number of pollutants 0
Number of land uses 0

****
Raingage Summary
****

Name	Data Source	Data Type	Recording Interval
100-YEAR	CHI_100	INTENSITY	10 min.
100-YEAR+20	CHI_120	INTENSITY	10 min.
2-YEAR	CHI_002	INTENSITY	10 min.

****
Subcatchment Summary
****

Name	Area	Width	%Imperv	%Slope	Rain Gage	Outlet
FIELD_1	1.20	269.48	78.00	1.0000	100-YEAR	FIELD_GRANULARS
L102A	0.30	68.54	64.00	2.0000	100-YEAR	EX1_(C-DRAN)
L104A	0.32	73.11	65.00	2.0000	100-YEAR	104_(C-STRM)
L4A	0.12	27.32	47.00	2.0000	100-YEAR	4_(C-STRM)
L4B	0.33	74.10	34.00	2.0000	100-YEAR	4A_(C-DRAN)
L4C	0.06	14.52	95.00	1.0000	100-YEAR	4_(C-STRM)
L4D	0.07	16.32	53.00	2.0000	100-YEAR	4B_(C-STRM)

****
Node Summary
****

Name	Type	Invert Elev.	Max. Depth	Ponded Area	External Inflow
J1	JUNCTION	68.67	1.80	0.0	
100_(C-STRM)	OUTFALL	67.47	0.53	0.0	
SPRINGFIELD	OUTFALL	69.72	1.00	0.0	
101A	STORAGE	67.52	2.83	0.0	
102_(C-STRM)	STORAGE	67.78	2.57	0.0	
103_(C-STRM)	STORAGE	67.96	3.75	0.0	
104_(C-STRM)	STORAGE	68.27	2.08	0.0	
105_(C-STRM)	STORAGE	68.34	2.06	0.0	
4_(C-STRM)	STORAGE	69.59	1.12	0.0	
4A_(C-DRAN)	STORAGE	68.80	1.79	0.0	
4B_(C-STRM)	STORAGE	70.02	1.88	0.0	
EX1_(C-DRAN)	STORAGE	68.11	1.88	0.0	
FIELD_GRANULARS	STORAGE	69.33	1.17	0.0	
OGS	STORAGE	67.50	2.85	0.0	
STORMTRAP	STORAGE	67.56	2.79	0.0	
TANK_IN_(C-STRM)	STORAGE	67.58	2.77	0.0	

****
Link Summary
****

Name	From Node	To Node	Type	Length	%Slope	Roughness
C1A	STORMTRAP	101A	CONDUIT	6.0	0.5000	0.0130
C1B	TANK_IN_(C-STRM)	STORMTRAP	CONDUIT	2.2	0.9091	0.0130
C2	EX1_(C-DRAN)	STORMTRAP	CONDUIT	1.5	1.3335	0.0130
C3	STORMTRAP	SPRINGFIELD	CONDUIT	3.5	3.7169	0.0240
C4	FIELD_GRANULARS	104_(C-STRM)	CONDUIT	3.5	11.5039	0.0240
C5	4A_(C-DRAN)	EX1_(C-DRAN)	CONDUIT	82.0	0.9635	0.0240

C6	4B_(C-STRM)	4A_(C-DRAN)	CONDUIT	19.8	5.7164	0.0240
Pipe_10_(C-STRM)_1	4_(C-STRM)	J1	CONDUIT	52.3	1.7597	0.0130
Pipe_10_(C-STRM)_2	J1	105_(C-STRM)	CONDUIT	14.1	1.7007	0.0130
Pipe_11_(C-STRM)_1	4A_(C-DRAN)	J1	CONDUIT	3.5	3.5451	0.0130
Pipe_13_(C-STRM)	104_(C-STRM)	103_(C-STRM)	CONDUIT	17.1	0.5093	0.0130
Pipe_3_(C-STRM)_2	OGS	100_(C-STRM)	CONDUIT	8.8	0.3297	0.0130
Pipe_4_(1)_(C-STRM)	103_(C-STRM)	102_(C-STRM)	CONDUIT	22.6	0.5142	0.0130
Pipe_4_(C-STRM)	STORMTRAP	101A	CONDUIT	6.0	0.0664	0.0130
Pipe_5_(1)_(C-STRM)	102_(C-STRM)	TANK_IN_(C-STRM)	CONDUIT	17.1	1.0115	0.0130
Pipe_8_(C-STRM)	105_(C-STRM)	102_(C-STRM)	CONDUIT	41.6	0.5046	0.0130
OR1	101A	OGS	ORIFICE			
OR2	4B_(C-STRM)	4A_(C-DRAN)	ORIFICE			
OR3	FIELD_GRANULARS	103_(C-STRM)	ORIFICE			

****
Cross Section Summary
****

Conduit	Shape	Full Depth	Full Area	Hyd. Rad.	Max. Width	No. of Barrels	Full Flow
C1A	CIRCULAR	0.53	0.22	0.13	0.53	1	304.12
C1B	CIRCULAR	0.53	0.22	0.13	0.53	1	410.08
C2	CIRCULAR	0.25	0.05	0.06	0.25	1	68.67
C3	TRAPEZOIDAL	1.00	15.00	0.60	25.00	1	85495.18
C4	TRAPEZOIDAL	1.00	15.00	0.60	25.00	1	150410.27
C5	TRAPEZOIDAL	1.00	15.00	0.60	25.00	1	43528.21
C6	TRAPEZOIDAL	1.00	15.00	0.60	25.00	1	106026.62
Pipe_10_(C-STRM)_1	CIRCULAR	0.38	0.11	0.09	0.38	1	232.60
Pipe_10_(C-STRM)_2	CIRCULAR	0.38	0.11	0.09	0.38	1	228.66
Pipe_11_(C-STRM)_1	CIRCULAR	0.20	0.03	0.05	0.20	1	61.76
Pipe_13_(C-STRM)	CIRCULAR	0.30	0.07	0.07	0.30	1	69.01
Pipe_3_(C-STRM)_2	CIRCULAR	0.53	0.22	0.13	0.53	1	246.95
Pipe_4_(1)_(C-STRM)	CIRCULAR	0.53	0.22	0.13	0.53	1	308.40
Pipe_4_(C-STRM)	CIRCULAR	0.53	0.22	0.13	0.53	1	110.85
Pipe_5_(1)_(C-STRM)	CIRCULAR	0.53	0.22	0.13	0.53	1	432.54
Pipe_8_(C-STRM)	CIRCULAR	0.38	0.11	0.09	0.38	1	124.55

****
Analysis Options
****
Flow Units ..... LPS
Process Models:
  Rainfall/Runoff ..... YES
  RDII ..... NO
  Snowmelt ..... NO
  Groundwater ..... NO
  Flow Routing ..... YES
  Ponding Allowed ..... NO
  Water Quality ..... NO
Infiltration Method ..... HORTON
Flow Routing Method ..... DYNWAVE
Surcharge Method ..... EXTRAN
Starting Date 10/30/2026 00:00:00
Ending Date 10/31/2026 12:00:00
Antecedent Dry Days 0.0
Report Time Step 00:01:00
Wet Time Step 00:01:00
Dry Time Step 00:01:00
Routing Time Step ..... 2.00 sec
Variable Time Step ..... NO
Maximum Trials 8
Number of Threads 1
Head Tolerance ..... 0.001500 m

Runoff Quantity Continuity	Volume hectare-m	Depth mm
Total Precipitation	0.173	71.667
Evaporation Loss	0.000	0.000
Infiltration Loss	0.037	15.190
Surface Runoff	0.134	55.490
Final Storage	0.003	1.046
Continuity Error (%)	-0.084	

Flow Routing Continuity	Volume hectare-m	Volume 10^6 ltr
Dry Weather Inflow	0.000	0.000
Wet Weather Inflow	0.134	1.340
Groundwater Inflow	0.000	0.000
RDII Inflow	0.000	0.000
External Inflow	0.000	0.001
External Outflow	0.134	1.342
Flooding Loss	0.000	0.000
Evaporation Loss	0.000	0.000
Exfiltration Loss	0.000	0.000
Initial Stored Volume	0.018	0.181
Final Stored Volume	0.018	0.181
Continuity Error (%)	-0.051	

****
Highest Flow Instability Indexes
****
Link OR1 (90)
Link Pipe_3_(C-STRM)_2 (25)
Link C1A (1)
Link Pipe_4_(C-STRM) (1)
Link C1B (1)

****
Most Frequent Nonconverging Nodes
****
Node 100_(C-STRM) (0.01%)
Node SPRINGFIELD (0.01%)
Node J1 (0.00%)
Node 4A_(C-DRAN) (0.00%)
Node FIELD_GRANULARS (0.00%)

****
Routing Time Step Summary

****
Minimum Time Step : 2.00 sec
Average Time Step : 2.00 sec
Maximum Time Step : 2.00 sec
% of Time in Steady State : 0.00
Average Iterations per Step : 2.03
% of Steps Not Converging : 0.01

****
Subcatchment Runoff Summary
****

Subcatchment	Total Precip mm	Total Runon mm	Total Evap mm	Total Infil mm	Imperv Runoff mm	Perv Runoff mm	Total Runoff mm	Total Runoff 10^6 ltr	Peak Runoff LPS	Runoff Coeff
FIELD_1	71.67	0.00	0.00	9.91	54.73	5.87	60.60	0.73	543.26	0.846
L102A	71.67	0.00	0.00	16.28	44.91	9.53	54.45	0.17	127.89	0.760
L104A	71.67	0.00	0.00	15.81	45.62	9.28	54.90	0.18	137.55	0.766
L4A	71.67	0.00	0.00	24.32	32.99	13.68	46.67	0.06	43.14	0.651
L4B	71.67	0.00	0.00	30.59	23.87	16.72	40.59	0.13	99.15	0.566
L4C	71.67	0.00	0.00	2.20	66.65	1.39	68.04	0.04	31.71	0.949
L4D	71.67	0.00	0.00	21.46	37.20	12.24	49.44	0.04	27.49	0.690

****
Node Depth Summary
****

Node	Type	Average Depth Meters	Maximum Depth Meters	Maximum HGL Meters	Time of Max Occurrence days hr:min	Reported Max Depth Meters
J1	JUNCTION	0.17	1.28	69.95	0 01:20	1.28
100_(C-STRM)	OUTFALL	0.47	0.47	67.94	0 00:00	0.47
SPRINGFIELD	OUTFALL	0.00	0.00	69.72	0 00:00	0.00
101A	STORAGE	0.77	2.30	69.82	0 02:31	2.30
102_(C-STRM)	STORAGE	0.50	2.04	69.82	0 02:28	2.04
103_(C-STRM)	STORAGE	0.35	1.87	69.82	0 02:20	1.87
104_(C-STRM)	STORAGE	0.26	1.57	69.84	0 01:20	1.57
105_(C-STRM)	STORAGE	0.24	1.54	69.88	0 01:20	1.54
4_(C-STRM)	STORAGE	0.03	0.37	69.96	0 01:20	0.37
4A_(C-DRAN)	STORAGE	0.16	1.60	70.40	0 01:10	1.60
4B_(C-STRM)	STORAGE	0.01	1.70	71.72	0 01:10	1.70
EX1_(C-DRAN)	STORAGE	0.80	1.71	69.82	0 02:30	1.71
FIELD_GRANULARS	STORAGE	0.08	0.53	69.86	0 01:50	0.53
OGS	STORAGE	0.43	0.45	67.95	0 00:00	0.44
STORMTRAP	STORAGE	0.73	2.26	69.82	0 02:31	2.26
TANK_IN_(C-STRM)	STORAGE	0.71	2.24	69.82	0 02:30	2.24

****
Node Inflow Summary
****

Node	Type	Maximum Lateral Inflow LPS	Maximum Total Inflow LPS	Time of Max Occurrence days hr:min	Lateral Inflow Volume 10^6 ltr	Total Inflow Volume 10^6 ltr	Flow Balance Error Percent
J1	JUNCTION	0.00	165.18	0 01:07	0	0.273	0.112
100_(C-STRM)	OUTFALL	0.00	44.00	0 02:31	0	1.34	0.000
SPRINGFIELD	OUTFALL	0.00	0.00	0 00:00	0	0	0.000 ltr
101A	STORAGE	0.00	172.57	0 01:13	0	1.36	0.004
102_(C-STRM)	STORAGE	0.00	396.08	0 01:10	0	1.19	-0.144
103_(C-STRM)	STORAGE	0.00	244.29	0 01:10	0	0.908	-0.070
104_(C-STRM)	STORAGE	137.55	137.55	0 01:10	0.178	0.18	0.462
105_(C-STRM)	STORAGE	0.00	165.09	0 01:07	0	0.275	0.304
4_(C-STRM)	STORAGE	74.84	74.84	0 01:10	0.101	0.102	-0.137
4A_(C-DRAN)	STORAGE	99.15	124.17	0 01:10	0.134	0.17	-0.346
4B_(C-STRM)	STORAGE	27.49	27.49	0 01:10	0.0359	0.0359	-0.045
EX1_(C-DRAN)	STORAGE	127.89	133.41	0 01:10	0.166	0.18	0.213
FIELD_GRANULARS	STORAGE	543.26	543.26	0 01:10	0.726	0.726	-0.004
OGS	STORAGE	0.00	44.00	0 02:31	0	1.34	-0.004
STORMTRAP	STORAGE	0.00	515.56	0 01:10	0	1.55	0.002
TANK_IN_(C-STRM)	STORAGE	0.00	387.44	0 01:10	0	1.19	0.003

****
Node Surcharge Summary
****

Surcharging occurs when water rises above the top of the highest conduit.

Node	Type	Hours Surcharged	Max. Height Above Crown Meters	Min. Depth Below Rim Meters
J1	JUNCTION	5.54	0.905	0.520

****
Node Flooding Summary
****

No nodes were flooded.

****

Storage Volume Summary
****

Storage Unit	Average Volume 1000 m	Avg Pcnt Full	Evap Pcnt Loss	Exfil Pcnt Loss	Maximum Volume 1000 m	Max Pcnt Full	Time of Max Occurrence days	hr:min	Maximum Outflow LPS
101A	0.001	27.0	0.0	0.0	0.003	81.2	0	02:31	44.00
102_(C-STRM)	0.001	19.6	0.0	0.0	0.002	79.3	0	02:28	387.44
103_(C-STRM)	0.000	9.2	0.0	0.0	0.002	49.7	0	02:20	239.40
104_(C-STRM)	0.000	12.4	0.0	0.0	0.001	75.6	0	01:20	135.31
105_(C-STRM)	0.000	11.6	0.0	0.0	0.002	74.7	0	01:20	157.79
4_(C-STRM)	0.000	2.6	0.0	0.0	0.000	33.0	0	01:20	74.50
4A_(C-DRAN)	0.000	8.7	0.0	0.0	0.002	89.4	0	01:10	100.65
4B_(C-STRM)	0.000	0.7	0.0	0.0	0.001	90.6	0	01:10	25.32
EX1_(C-DRAN)	0.000	42.4	0.0	0.0	0.001	90.9	0	02:30	132.24
FIELD_GRANULARS	0.031	3.9	0.0	0.0	0.350	43.3	0	01:50	111.99
OGS	0.000	0.0	0.0	0.0	0.000	0.0	0	00:00	44.00
STORMTRAP	0.288	35.1	0.0	0.0	0.757	92.2	0	02:31	172.57
TANK_IN_(C-STRM)	0.001	25.5	0.0	0.0	0.003	80.8	0	02:30	384.28

****
Outfall Loading Summary
****

Outfall Node	Flow Freq Pcnt	Avg Flow LPS	Max Flow LPS	Total Volume 10^6 ltr
100_(C-STRM)	78.40	13.21	44.00	1.342
SPRINGFIELD	0.00	0.00	0.00	0.000
System	39.20	13.21	44.00	1.342

****

Link Flow Summary
****

Link	Type	Maximum |Flow| LPS	Time of Max Occurrence days	hr:min	Maximum |Veloc| m/sec	Max/ Full Flow	Max/ Full Depth
C1A	CONDUIT	86.68	0	01:13	0.40	0.29	1.00
C1B	CONDUIT	384.28	0	01:10	1.78	0.94	1.00
C2	CONDUIT	132.24	0	01:10	2.69	1.93	1.00
C3	CONDUIT	0.00	0	00:00	0.00	0.00	0.00
C4	CONDUIT	0.00	0	00:00	0.00	0.00	0.00
C5	CONDUIT	8.07	0	01:10	0.19	0.00	0.11
C6	CONDUIT	3.33	0	01:10	0.21	0.00	0.00
Pipe_10_(C-STRM)_1	CONDUIT	74.50	0	01:10	0.94	0.32	0.99
Pipe_10_(C-STRM)_2	CONDUIT	165.09	0	01:07	1.59	0.72	1.00
Pipe_11_(C-STRM)_1	CONDUIT	96.32	0	01:07	3.07	1.56	1.00
Pipe_13_(C-STRM)	CONDUIT	135.31	0	01:10	1.91	1.96	1.00
Pipe_3_(C-STRM)_2	CONDUIT	44.00	0	02:31	0.22	0.18	0.86
Pipe_4_(1)_(C-STRM)	CONDUIT	239.40	0	01:10	1.11	0.78	1.00
Pipe_4_(C-STRM)	CONDUIT	85.89	0	01:13	0.40	0.77	1.00
Pipe_5_(1)_(C-STRM)	CONDUIT	387.44	0	01:10	1.79	0.90	1.00
Pipe_8_(C-STRM)	CONDUIT	157.79	0	01:08	1.43	1.27	1.00
OR1	ORIFICE	44.00	0	02:31			1.00
OR2	ORIFICE	22.01	0	01:08			1.00
OR3	ORIFICE	111.99	0	01:13			1.00

****
Flow Classification Summary
****

Conduit	Adjusted /Actual Length	Fraction of Time in Flow Class: Dry	Up Dry	Down Dry	Sub Crit	Sup Crit	Up Crit	Down Crit	Norm Ltd	Inlet Ctrl
C1A	1.00	0.00	0.00	0.00	1.00	0.00	0.00	0.00	0.00	0.00

C1B	1.00	0.00	0.00	0.00	1.00	0.00	0.00	0.00	0.00	0.00
C2	1.00	0.01	0.00	0.00	0.17	0.00	0.00	0.82	0.00	0.00
C3	1.00	1.00	0.00	0.00	0.00	0.00	0.00	0.00	0.00	0.00
C4	1.00	1.00	0.00	0.00	0.00	0.00	0.00	0.00	0.00	0.00
C5	1.00	0.85	0.15	0.00	0.00	0.00	0.00	0.00	0.97	0.00
C6	1.00	1.00	0.00	0.00	0.00	0.00	0.00	0.00	0.00	0.00
Pipe_10_(C-STRM)_1	1.00	0.01	0.00	0.00	0.99	0.00	0.00	0.00	0.82	0.00
Pipe_10_(C-STRM)_2	1.00	0.01	0.00	0.00	0.22	0.00	0.00	0.77	0.04	0.00
Pipe_11_(C-STRM)_1	1.00	0.01	0.00	0.00	0.18	0.01	0.00	0.79	0.05	0.00
Pipe_13_(C-STRM)	1.00	0.01	0.00	0.00	0.27	0.00	0.00	0.72	0.04	0.00
Pipe_3_(C-STRM)_2	1.00	0.00	0.00	0.00	1.00	0.00	0.00	0.00	0.00	0.00
Pipe_4_(1)_(C-STRM)	1.00	0.00	0.08	0.00	0.92	0.00	0.00	0.00	0.63	0.00
Pipe_4_(C-STRM)	1.00	0.00	0.00	0.00	1.00	0.00	0.00	0.00	0.00	0.00
Pipe_5_(1)_(C-STRM)	1.00	0.00	0.00	0.00	1.00	0.00	0.00	0.00	0.00	0.00
Pipe_8_(C-STRM)	1.00	0.01	0.00	0.00	0.28	0.00	0.00	0.71	0.06	0.00

****
Conduit Surcharge Summary
****

Conduit	Hours Full: Both Ends	Hours Full: Upstream	Hours Full: Dnstream	Hours Above Full Normal Flow	Hours Capacity Limited
C1A	10.72	10.72	11.10	0.01	0.01
C1B	10.50	10.50	10.72	0.01	0.18
C2	5.50	5.62	5.51	0.18	0.16
Pipe_10_(C-STRM)_1	0.01	0.01	5.54	0.01	0.01
Pipe_10_(C-STRM)_2	5.54	5.54	5.84	0.01	0.07
Pipe_11_(C-STRM)_1	5.61	5.63	5.66	0.22	0.39
Pipe_13_(C-STRM)	7.07	7.09	7.56	0.18	0.19
Pipe_4_(1)_(C-STRM)	7.56	7.56	8.28	0.01	0.10
Pipe_4_(C-STRM)	10.72	10.72	10.77	0.01	0.01
Pipe_5_(1)_(C-STRM)	8.68	8.68	10.17	0.01	0.01
Pipe_8_(C-STRM)	6.27	6.29	7.38	0.15	0.15

Analysis begun on: Fri Nov 13 07:06:38 2026
Analysis ended on: Fri Nov 13 07:06:39 2026
Total elapsed time: 00:00:01

A.8 Stage-Storage Curves

STORMTRAP STAGE-STORAGE CURVE

Notes	Stage (m Elev.)	Depth (m)	Storage Area (m^2)	Volume (m^3)
	67.56	0.000	464.1	0
	67.61	0.050	464.1	23.2
	67.66	0.100	464.1	46.4
	67.71	0.150	464.1	69.6
	67.76	0.200	464.1	92.8
	67.81	0.250	464.1	116.0
	67.86	0.300	464.1	139.2
	67.91	0.350	464.1	162.4
	67.96	0.400	464.1	185.6
	68.01	0.450	464.1	208.8
	68.06	0.500	464.1	232.1
	68.11	0.550	464.1	255.3
	68.16	0.600	464.1	278.5
	68.21	0.650	464.1	301.7
	68.26	0.700	464.1	324.9
	68.31	0.750	464.1	348.1
	68.36	0.800	464.1	371.3
	68.41	0.850	464.1	394.5
	68.46	0.900	464.1	417.7
	68.51	0.950	464.1	440.9
	68.56	1.000	464.1	464.1
	68.61	1.050	464.1	487.3
	68.66	1.100	464.1	510.5
	68.71	1.150	464.1	533.7
	68.76	1.200	464.1	556.9
	68.81	1.250	464.1	580.1
Obv. Tank	68.86	1.295	464.1	601.0
	68.86	1.295	0.36	601.0
	68.905	1.345	0.36	601.0
	68.955	1.395	0.36	601.0
	69.005	1.445	0.36	601.1
	69.055	1.495	0.36	601.1
	69.105	1.545	0.36	601.1
	69.155	1.595	0.36	601.1
	69.205	1.645	0.36	601.1
	69.255	1.695	0.36	601.2
	69.305	1.745	0.36	601.2
	69.355	1.795	0.36	601.2
	69.405	1.845	0.36	601.2
	69.455	1.895	0.36	601.2
	69.490	1.930	0.36	601.2
	69.505	1.945	0.36	601.2
	69.550	1.990	0.36	601.3
	69.6	2.040	0.36	601.3
Rim. Elev.	69.610	2.050	0.36	601.3
	69.611	2.051	90.4	601.3
	69.65	2.090	243.1	607.4
	69.7	2.140	546.9	627.1
	69.75	2.190	972.3	665.1
	69.8	2.240	1512.0	727.2
Spill. Elev.	69.850	2.290	2187.7	819.7
False Rim	70.350	2.790		

FIELD GRANULARS STAGE-STORAGE CURVE

Notes	Stage (m Elev.)	Depth (m)	Storage Area (m^2)	Volume (m^3)
Subdrain Inv.	69.327	0.000	0	0.0
	69.627	0.300	0	0.0
Top Clearstone	69.727	0.400	0	0.0
	69.728	0.401	2694	2.7
Top Gran. O	70.027	0.700	2694	808.2
	70.028	0.701	0	0.0
Field Surface	70.100	0.773	0	0.0
Spill. Elev.	70.100	0.773	0	0.0
False Rim	70.500	1.173		

A.9 Sewer CCTV Inspection Report

Ottawa (Head Office)
1800 Bantree Street
Ottawa, Ontario K1B 5L6
☎ 613.745.2444
🖷 613.745.9994

Montreal
2700 Sabourin Street
St-Laurent, Quebec H4S 1M2
☎ 514.738.2666
🖷 514.738.9762

www.cwwcanada.com
1.866.695.0155

CLEAN WATER WORKS INC.

INTEGRATED SEWER SOLUTIONS

Stantec

ASHBURY COLLEGE
Ottawa, Ontario

SEWER CCTV INSPECTION REPORT

Report ID
156447ST1

Sewer Use
Storm

Completion Date
November 15, 2026

Inspected Length
72.40 meters

THE WAY IS CLEAR™

- Watermain Swabbing
- Hydro Vacuum Excavation
- CCTV Inspection of Sewers
- Plumbing & Drain Services
- Structural Rehabilitation of Manholes
- Cured-in-Place-Pipe Lining & Spot Repairs
- Grouting, Test & Seal Joints, Manholes & Services
- Lateral Sewer Inspection & Locates From Main
- Sewer Cleaning, Flushing & Pumping

Table of contents

Page

1. Index of pipes 2
2. Structural rating 3
3. O&M rating 4
4. Pipe summary and condition details 5
5. Vision Report© Legend 12

1. Index of pipes

3 items

Pipe	Upstream	Downstream	Street	Date	Direction	Height	Inspected	Total	Page
CB A CB B	CB A	CB B	SPRINGFIELD ROAD	15/11/2026, 10:14 AM	U - Upstream	100	31.2	46.8	7
CB A CB B	CB A	CB B	SPRINGFIELD ROAD	15/11/2026, 10:05 AM	D - Downstream	100	15.6	46.8	5
CB B MAIN	CB B	MAIN	SPRINGFIELD ROAD	15/11/2026, 10:06 AM	D - Downstream	100	25.6	25.6	10
							Total: 72.4	Total: 119.2	

2. Structural rating

3 items

3 - Moderate defect grade (3 of 3 items)

Score	Quick	Index	Pipe	Start/End	Direction	Street	Page
13	3322	2.6	CB A CB B	CB B --> CB A	Against flow	SPRINGFIELD ROAD	7
5	3121	2.5	CB A CB B	CB A --> CB B	Direction of flow	SPRINGFIELD ROAD	5
3	3100	3	CB B MAIN	CB B --> MAIN	Direction of flow	SPRINGFIELD ROAD	10

3. O&M rating

3 items

2 - Minor to Moderate (1 of 3 items)

Score	Quick	Index	Structural	Pipe	Start/End	Direction	Street	Page
4	2200	2	3	CB B MAIN	CB B --> MAIN	Direction of flow	SPRINGFIELD ROAD	10

0 - No Defects (2 of 3 items)

Score	Quick	Index	Structural	Pipe	Start/End	Direction	Street	Page
0	0000	0	3	CB A CB B	CB A --> CB B	Direction of flow	SPRINGFIELD ROAD	5
0	0000	0	3	CB A CB B	CB B --> CB A	Against flow	SPRINGFIELD ROAD	7

4. Pipe summary and condition details

Pipe identification

Pipe:	CB A CB B	**Direction of inspection:**	CB A --> CB B
Direction of flow:	CB A --> CB B	**Direction:**	Direction of flow

Pipe location

			UPSTREAM	DOWNSTREAM
Road:	SPRINGFIELD ROAD	**Easting (X):**		
Crossroad:		**Northing (Y):**		
Drainage Area:		**Elevation (Z):**		
City:	OTTAWA			
Location:	Parking lot	**GPS Accuracy:**		
Owner:	STANTEC CONSULTING LTD	**Coordinate System:**		
Road segment:		**Vertical Datum:**		

Pipe characteristics

Sewer Use:	Stormwater Pipe	**Inspected length:**	15.6
Height:	100	**Total length:**	46.8
Width:		**Rim/Inv.:**	
Shape:	Circular	**Grade/Inv.:**	
Material:	Polyvinyl Chloride	**Rim/Grade:**	
Lining:		**Rim/Inv.:**	
Joint length:		**Grade/Inv.:**	
Year laid:		**Rim/Grade:**	
Year renewed:		**Sewer category:**	

Additional details

Inspection standard:	PACP 6.0	**Location details:**	
Date:	15/11/2026, 10:05 AM	**Surveyed by:**	BRANDON CADE
Project Number:	ASHBURY COLLEGE	**Certificate #:**	U-1120-704M0015
Customer:	ASHBURY COLLEGE - 156447	**Pre-Cleaning:**	No Pre-Cleaning
PO number:		**Date cleaned:**	
Work order:	156447	**Unit of measurement:**	Metric
Purpose:		**Media label:**	
Weather:	Dry	**Sheet #:**	
Flow control:	Not Controlled		

Structural rating		O&M rating		Overall rating	
Peak:	3	**Peak:**	0	**Peak:**	3
Quick rating:	3121	**Quick rating:**	0000	**Quick rating:**	3121
Score:	5	**Score:**	0	**Score:**	5
Index:	2.5	**Index:**	0	**Index:**	2.5

Additional information

Other information

Report ID:	156447ST1	**Information 6:**	
Information 2:		**Information 7:**	
Information 3:		**Information 8:**	
Information 4:		**Information 9:**	
Information 5:		**Information 10:**	

4. Pipe summary and condition details

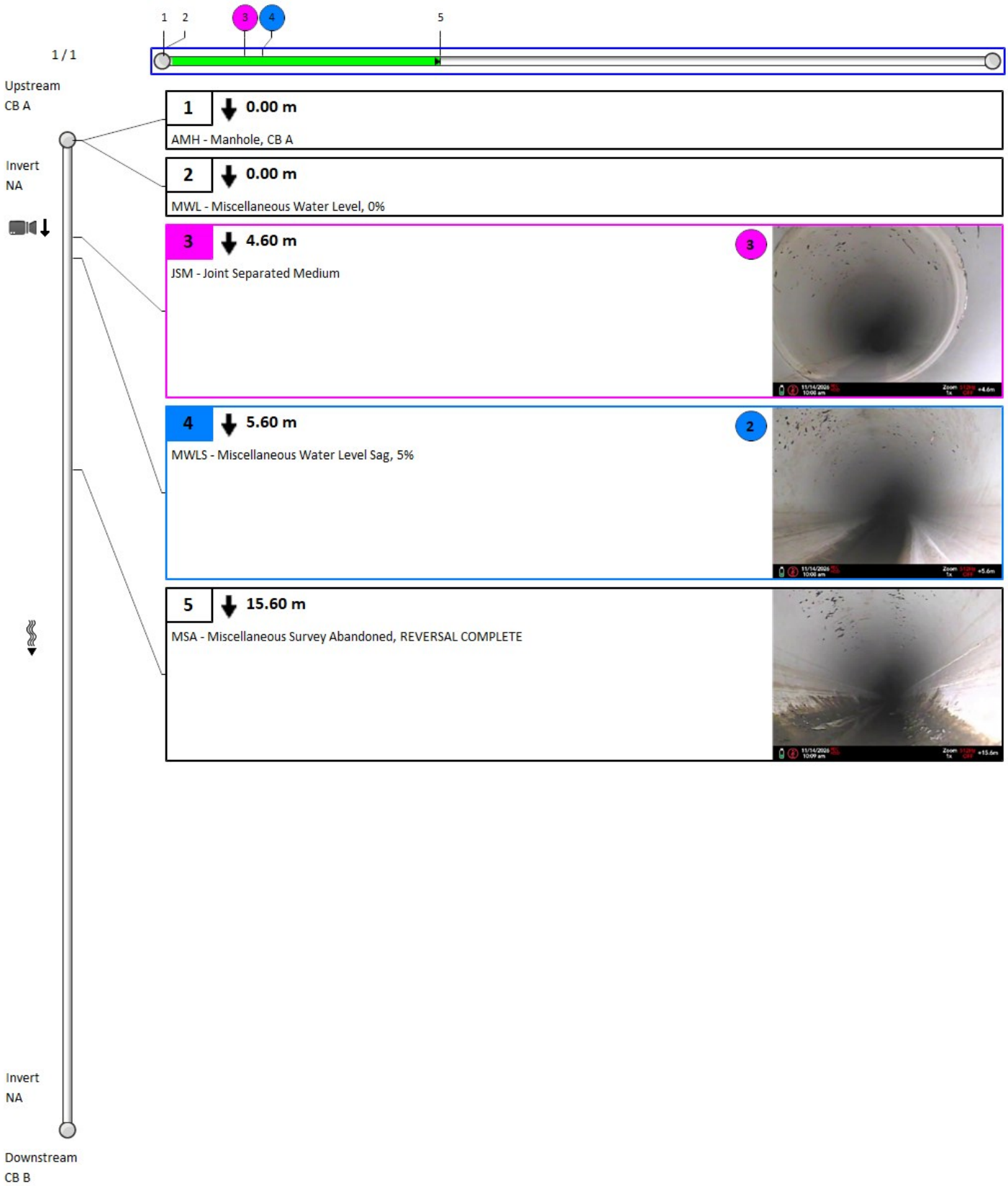

4. Pipe summary and condition details

Pipe identification

Pipe:	CB A CB B	**Direction of inspection:**	CB B --> CB A
Direction of flow:	CB A --> CB B	**Direction:**	Against flow

Pipe location

Road:	SPRINGFIELD ROAD		UPSTREAM	DOWNSTREAM
Crossroad:		**Easting (X):**		
Drainage Area:		**Northing (Y):**		
City:	OTTAWA	**Elevation (Z):**		
Location:				
Owner:	STANTEC CONSULTING LTD	**GPS Accuracy:**		
Road segment:		**Coordinate System:**		
		Vertical Datum:		

Pipe characteristics

Sewer Use:	Stormwater Pipe	**Inspected length:**	31.2
Height:	100	**Total length:**	46.8
Width:		**Rim/Inv.:**	
Shape:	Circular	**Grade/Inv.:**	
Material:	Polyvinyl Chloride	**Rim/Grade:**	
Lining:		**Rim/Inv.:**	
Joint length:		**Grade/Inv.:**	
Year laid:		**Rim/Grade:**	
Year renewed:		**Sewer category:**	

Additional details

Inspection standard:	PACP 6.0	**Location details:**	
Date:	15/11/2026, 10:14 AM	**Surveyed by:**	BRANDON CADE
Project Number:		**Certificate #:**	U-1120-704M0015
Customer:	ASHBURY COLLEGE - 156447	**Pre-Cleaning:**	No Pre-Cleaning
PO number:		**Date cleaned:**	
Work order:		**Unit of measurement:**	Metric
Purpose:		**Media label:**	
Weather:	Dry	**Sheet #:**	
Flow control:	Not Controlled		

Structural rating		O&M rating		Overall rating	
Peak:	3	**Peak:**	0	**Peak:**	3
Quick rating:	3322	**Quick rating:**	0000	**Quick rating:**	3322
Score:	13	**Score:**	0	**Score:**	13
Index:	2.6	**Index:**	0	**Index:**	2.6

Additional information

Other information

Report ID:	156447ST1	**Information 6:**	
Information 2:		**Information 7:**	
Information 3:		**Information 8:**	
Information 4:		**Information 9:**	
Information 5:		**Information 10:**	

4. Pipe summary and condition details



Downstream
CB B

1 **0.00 m**
AMH - Manhole, CB B

2 **0.00 m**
MWL - Miscellaneous Water Level, 0%

Invert
NA

3 **5.10 m** 3
JOM - Joint Offset Medium



4 **10.00 m** 3
JOM - Joint Offset Medium



5 **11.50 m** 2
MWLS - Miscellaneous Water Level Sag, 5%



6 **24.40 m** 3
JSM - Joint Separated Medium



7 **24.90 m** 2
MWLS - Miscellaneous Water Level Sag, 5%



Invert
NA

Upstream
CB A

4. Pipe summary and condition details

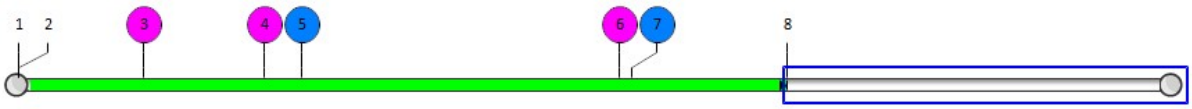

◀ 2 / 2

Downstream
CB B

Invert
NA

8	31.20 m	
MSA - Miscellaneous Survey Abandoned, CAMERA CAN NOT BE PUSHED FURTHER		

Invert
NA

Upstream
CB A

4. Pipe summary and condition details

Pipe identification

Pipe:	CB B MAIN	**Direction of inspection:**	CB B --> MAIN
Direction of flow:	CB B --> MAIN	**Direction:**	Direction of flow

Pipe location

			UPSTREAM	DOWNSTREAM
Road:	SPRINGFIELD ROAD	**Easting (X):**		
Crossroad:		**Northing (Y):**		
Drainage Area:		**Elevation (Z):**		
City:	OTTAWA			
Location:	Parking lot	**GPS Accuracy:**		
Owner:	STANTEC CONSULTING LTD	**Coordinate System:**		
Road segment:		**Vertical Datum:**		

Pipe characteristics

Sewer Use:	Stormwater Pipe	**Inspected length:**	25.6
Height:	100	**Total length:**	25.6
Width:		**Rim/Inv.:**	
Shape:	Circular	**Grade/Inv.:**	
Material:	Polyvinyl Chloride	**Rim/Grade:**	
Lining:		**Rim/Inv.:**	
Joint length:		**Grade/Inv.:**	
Year laid:		**Rim/Grade:**	
Year renewed:		**Sewer category:**	

Additional details

Inspection standard:	PACP 6.0	**Location details:**	
Date:	15/11/2026, 10:06 AM	**Surveyed by:**	BRANDON CADE
Project Number:	ASHBURY COLLEGE	**Certificate #:**	U-1120-704M0015
Customer:	ASHBURY COLLEGE - 156447	**Pre-Cleaning:**	No Pre-Cleaning
PO number:		**Date cleaned:**	
Work order:	156447	**Unit of measurement:**	Metric
Purpose:	Routine Assessment	**Media label:**	
Weather:	Dry	**Sheet #:**	
Flow control:	Not Controlled		

Structural rating		O&M rating		Overall rating	
Peak:	3	**Peak:**	2	**Peak:**	3
Quick rating:	3100	**Quick rating:**	2200	**Quick rating:**	3122
Score:	3	**Score:**	4	**Score:**	7
Index:	3	**Index:**	2	**Index:**	2.3

Additional information

Other information

Report ID:	156447ST1	**Information 6:**	
Information 2:		**Information 7:**	
Information 3:		**Information 8:**	
Information 4:		**Information 9:**	
Information 5:		**Information 10:**	

4. Pipe summary and condition details

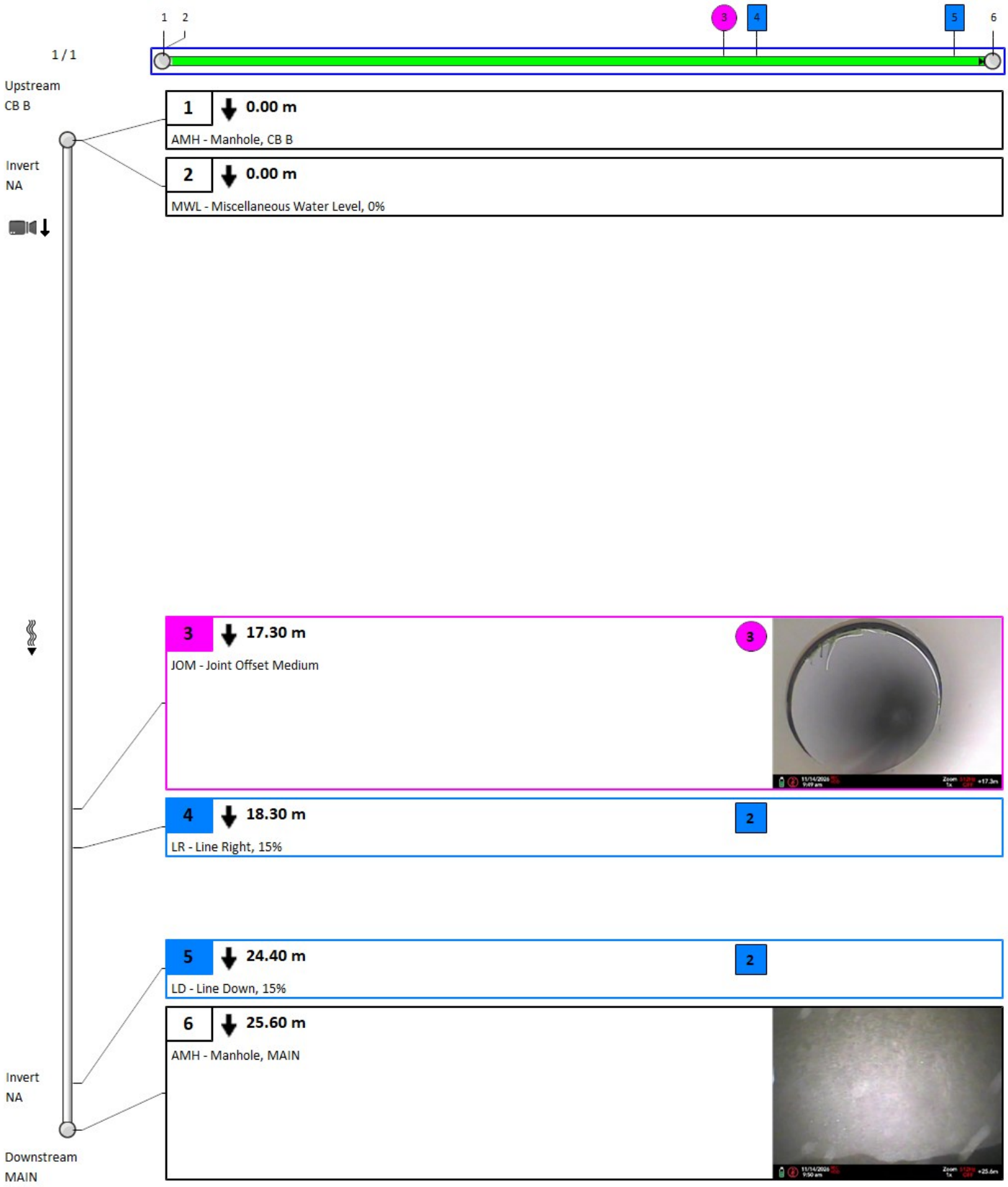

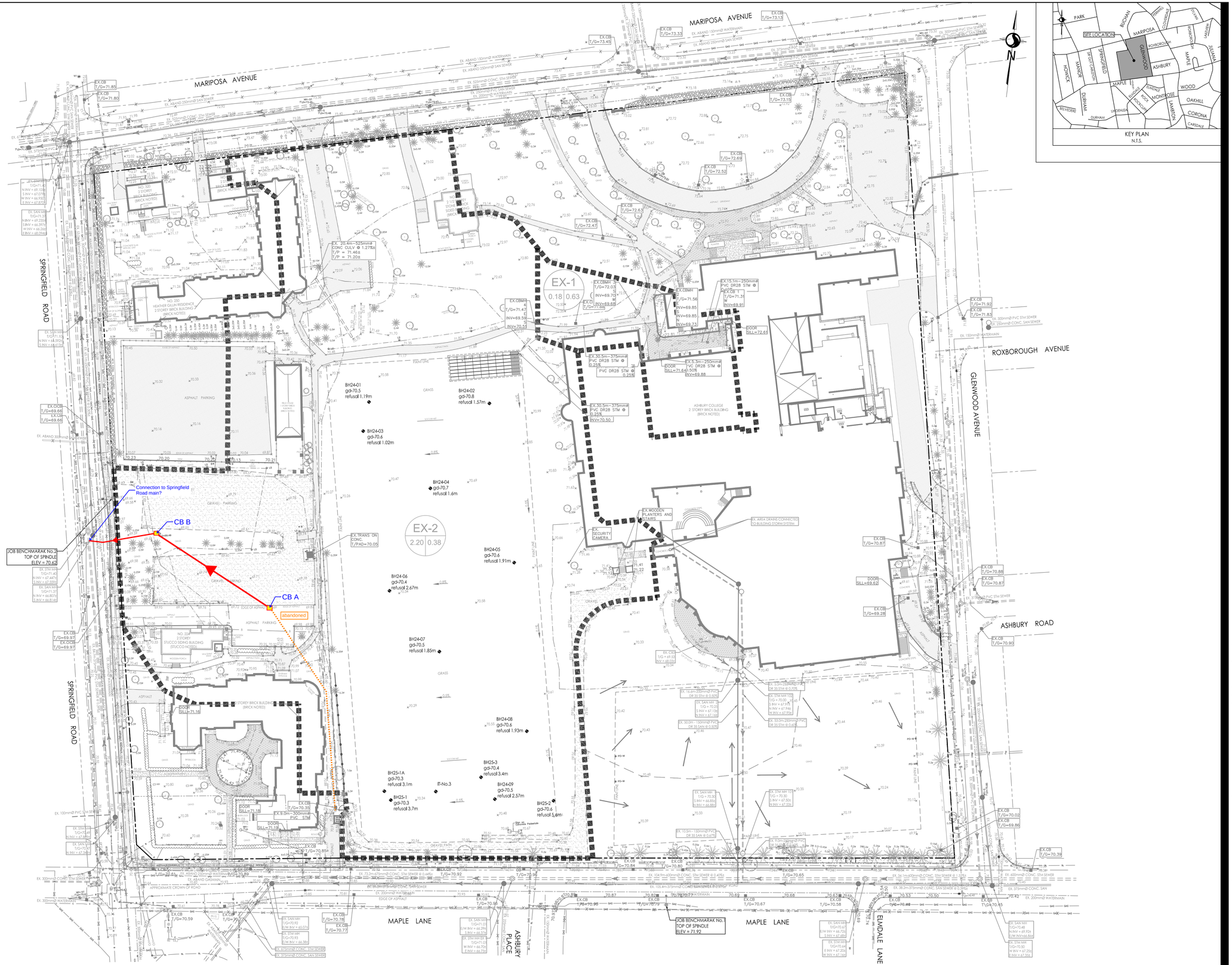
MARIPOSA AVENUE
SPRINGFIELD ROAD
GLENWOOD AVENUE
ROXBOROUGH AVENUE
ASHBURY ROAD
MAPLE LANE
ASHBURY PLACE
ELMDALE LANE
EX-1
0.18 0.63
EX-2
2.20 0.38
BH24-01 gd=70.5 refusal 1.19m
BH24-02 gd=70.8 refusal 1.57m
BH24-03 gd=70.6 refusal 1.02m
BH24-04 gd=70.7 refusal 1.6m
BH24-05 gd=70.6 refusal 1.91m
BH24-06 gd=70.4 refusal 2.67m
BH24-07 gd=70.5 refusal 1.85m
BH24-08 gd=70.6 refusal 1.93m
BH24-09 gd=70.5 refusal 2.57m
BH25-1 gd=70.3 refusal 3.7m
BH25-1A gd=70.3 refusal 3.1m
BH25-2 gd=70.6 refusal 5.4m
BH25-3 gd=70.4 refusal 3.4m
IT-No.3
Connection to Springfield Road main?
CB B
CB A
abandoned
JOB BENCHMARAK No.2 TOP OF SPINDLE ELEV = 70.62
JOB BENCHMARAK No.1 TOP OF SPINDLE ELEV = 71.92
EX. 20.4m-525mmø CONC CULV @ 1.27%± T/P = 71.46± T/P = 71.20±
EX. 9.0m-300mmø PVC STM
EX. 30.5m-375mmø PVC DR28 STM @ 0.25%
EX. 5.3m-250mmø PVC DR28 STM @ 0.50%
EX. 15.1m-250mmø PVC DR28 STM @
EX. 18.6m-200mmø PVC DR 35 STM @ 0.70%
EX. 50.0m-150mmø PVC DR 35 SAN @ 0.50%
EX. 53.0m-250mmø PVC DR 35 STM @ 0.40%
EX. 10.5m-150mmø PVC DR 35 SAN @ 0.47%
EX. 9.0m-200mmø PVC DR 35 STM @ 0.50%
EX. 104.9m-600mmø CONC. STM SEWER @ 0.40%±
EX. 103.4m-375mmø CONC SAN SEWER @ 0.70%±
EX. 38.3m-375mmø CONC. SAN SEWER @ 0.59%±
EX. 34.1m-600mmø CONC. STM SEWER @ 0.34%±
EX. 73.2m-675mmø CONC. STM SEWER @ 0.44%±
EX. 600mmø CONC. STM SEWER
EX. 375mmø CONC. SAN
EX. 200mmø WATERMAIN
EX. 300mmø PVC STM SEWER
EX. 250mmø CONC. SAN SEWER
EX. 150mmø WATERMAIN
EX. 375mmø PVC STM SEWER
EX. 525mmø CONC. STM SEWER
EX. 675mmø CONC. SAN SEWER
EX. 100mmø PVC STM SEWER
EX. ABAND 150mmø WATERMAIN
EX. ABAND 250mmø SAN SEWER
EX. 525mmø CONC. STM SEWER
EX. 250mmø PVC STM SEWER
EX. 375mmø PVC STM SEWER
EX. ABAND 150mmø WATERMAIN
EX. ABAND 250mmø SAN SEWER
EX. 525mmø CONC. STM SEWER
EX. 250mmø PVC STM SEWER
EX. 375mmø PVC STM SEWER
EX. ABAND 300mmø
EX. ABAND 250mmø WATERMAIN
EX. ABAND 250mmø SAN SEWER
EX. 300mmø CONC. STM SEWER
EX. 300mmø WATERMAIN
EX. ABAND 250mmø WATERMAIN
EX. ABAND 250mmø SAN SEWER
EX. 300mmø PVC STM SEWER
EX. 250mmø CONC. SAN SEWER
EX. 150mmø WATERMAIN
EX. 375mmø CONC. STM SEWER
EX. 675mmø CONC. SAN SEWER
EX. 375mmø CONC. SAN
EX. 200mmø WATERMAIN
EX. 300mmø WATERMAIN
EX. ABAND 250mmø WATERMAIN
EX. ABAND 250mmø SAN SEWER
EX. 300mmø CONC. STM SEWER
EX. 300mmø WATERMAIN
EX. ABAND 250mmø WATERMAIN
EX. ABAND 250mmø SAN SEWER
EX. 300mmø CONC. STM SEWER
EX. 300mmø WATERMAIN
EX. 375mmø CONC. STM SEWER
EX. 525

Vision Report© Legend

	The numbers sequentially identify each observation. They allow you to find complete descriptions and related photos throughout the pages. Note that when the pipe contains too many observations, the Vision© report hides the least important observations to optimize the display*.
60	A number with neither a square nor circle indicates a general observation.
	A circled number indicates a structural anomaly. The color of the circle indicates the severity of the anomaly on a scale of 1 to 5, 5 being the most severe: green=1, blue=2, magenta=3, orange=4 and red=5.
	A number in a square indicates an operation and maintenance anomaly. The color of the square indicates the severity of the anomaly on a scale of 1 to 5, 5 being the most severe: green=1, blue=2, magenta=3, orange=4 and red=5.
◀ 3 / 31 ▶	Indicates the current page number of the inspection report.
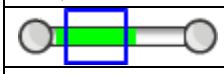	The blue square indicates a section of the pipe; this section is covered in detail on the current page of the report.
	The green line indicates the inspected part of the pipe. The remaining white line indicates the uninspected part of the pipe.
	Indicates the hold points on the camera during an inspection.
	Indicates the hold points on the camera during the reverse inspection.
	Indicates that a reverse inspection was carried out, however the camera did not reach the initial inspection hold point. (the hold point of the initial inspection)
	Indicates that a reverse inspection was carried out and that it has joined (has arrived at) the initial inspection hold point.
401-059B 	Identifies the start manhole number. Note that this manhole is not necessarily the upstream manhole of the pipe.
 401-631	Identifies the end manhole number. Note that this manhole is not necessarily the downstream manhole of the pipe.
	A downward arrow indicates that the inspection was carried out in the direction of the current, whereas an upward arrow indicates an inspection against the current. Note that the manhole located on the upper left of the page is always the start manhole, but not necessarily the upstream manhole of the pipe.
	This camera followed by a downward arrow is located on the upper left of the vertical pipe; it indicates that an inspection was done from this manhole.
	When the second camera appears on the bottom left page it means that a reverse inspection was carried out. Information about the reverse inspection is included in the report, thereby combining both inspections.
Invert 3.40	The measurement shown under the word <Invert> indicates the measurements between the frame and the pipe captured during the inspection. This measurement is available at the top left for the start manhole and the bottom left for the end manhole. If the invert was not measured during the inspection, an <NA> mark will be displayed.
	The downward bold arrow to the right of the observation number indicates that this observation was captured during the initial inspection.
	The blank arrow pointing upwards and located to the right of the observation number indicates that this observation was taken during the reverse inspection period, thereby confirming that this report combined both inspections.
18.40 m	Located to the right of the observation number is a number identifying the observation distance in relation to the start of the pipe.
SRV - Armature visible	A full description of the observation code according to the protocol used.

*Any hidden observations are readily accessible from the database as well as in other CTSpec report templates.

** CTSpec inc. reserves the right to modify, eliminate or add to the product features described in this pamphlet without notice.

© 2012 CTSpec inc. All rights reserved.

Appendix B Correspondence

B.1 Excerpt from Pre-Consultation Meeting Feedback (City of Ottawa) – Engineering Comments

- There is specific language about preservation of unifying landscape in the Secondary Plan and dominance of soft landscaping in the Heritage area (Section 2.4). Please, elaborate how the proposal responds to this.

  Protecting the continuity of the unifying landscape by ensuring that soft landscaping continues to dominate individual properties and the public realm…

- Please, note that if the lighting is replaces, it should respond to Secondary Plan policy 8 (Section 2.2), i.e. *Lighting in Rockcliffe Park should be configured to be sensitive to the context of the street?*

8. Zoning: Minor Institutional Zone, Subzone A (I1A)

   - No measurements for the setbacks are indicated on the site plan, and therefore, it's not possible to review compliance with Zoning By-law at this time.

   - Section 3 of the Zoning by-law speaks to non-conforming uses and non-complying buildings. The proposal is for a structure. Therefore, legal non-complying rights are not applicable in this case.

   - The subject lot has four frontages abutting City's ROW. The setbacks along Maple Lane and Glenwood Avenue should comply with Section 170, Table 170A of the Zoning By-law. Please, refer to Column IV of the Table.

   - Any setbacks that are non-compliant with Section 170, Table 170A of the Zoning By-law will need a zoning relief, whereas through Minor Variance application to the Committee of Adjustment or Zoning By-law Amendment.

Urban Design

N/A

Engineering

Comments:

9. The Stormwater Management Criteria, for the subject site, is to be based on the following:

   a. Application of the IDF information derived from the Meteorological Services of Canada rainfall data, taken from the MacDonald Cartier Airport, collected 1966 to 1997.

   b. In separated areas, the pre-development runoff shall be the lower of the existing coefficient or a maximum equivalent 'C' of 0.5, whichever is less (§ 8.3.7.3).

c. A calculated time of concentration (cannot be less than 10 minutes).

d. Flows to the storm sewer in excess of the 5-year storm release rate, up to and including the 100-year storm event, must be detained on site.

e. Storm sewer outlets should not be submerged.

f. The quantity control criteria (100-year post-development to 5-year pre-development).

g. Quality control criteria. Enhanced treatment of 80% TSS removal, due to proximity of the Ottawa River.

10. Deep Services (Storm, Sanitary and/or Water Supply)

a. Provide existing servicing information and the recommended location for the proposed connections. Services should ideally be grouped in a common trench to minimize the number of road cuts.

b. Review provision of a high-level sewer.

c. CCTV sewer inspection of city infrastructure is required to record pre and post construction conditions and ensure there is no damage to City infrastructure.

d. Sewer connections to be made above springline of the sewermain as per:

i. Std Dwg S11.1 for flexible main sewers – connections made using approved tee or wye fittings.

ii. Std Dwg S11 (For rigid main sewers) – lateral must be less that 50% the diameter of the sewermain,

iii. Std Dwg S11.2 (for rigid main sewers using bell end insert method) – for larger diameter laterals where manufactured inserts are not available; lateral must be less than 50% diameter of the sewermain,

iv. Connections to manholes permitted when the connection is to rigid main sewers where the lateral exceeds 50% the diameter of the sewermain. – Connect obvert to obvert with the outlet pipe unless pipes are a similar size.

11. Stormwater

a. Modifying the existing field to the proposed artificial turf will require storm water management of the fields as per the above mentioned criteria.

b. Underground Storage: Please note that the Modified Rational Method for storage computation in the Sewer Design Guidelines was originally

intended to be used for above ground storage (i.e. parking lot) where the change in head over the orifice varied from 1.5 m to 1.2 m (assuming a 1.2 m deep CB and a max ponding depth of 0.3 m). This change in head was small and hence the release rate fluctuated little, therefore there was no need to use an average release rate.

When underground storage is used, the release rate fluctuates from a maximum peak flow based on maximum head down to a release rate of zero. This difference is large and has a significant impact on storage requirements. We therefore require that an average release rate equal to 50% of the peak allowable rate shall be applied to estimate the required volume. Alternatively, the consultant may choose to use a submersible pump in the design to ensure a constant release rate.

In the event that there is a disagreement from the designer regarding the required storage, The City will require that the designer demonstrate their rationale utilizing dynamic modelling, that will then be reviewed by City modellers in the Water Resources Group.

Provide information on type of underground storage system including product name and model, number of chambers, chamber configuration, confirm invert of chamber system, top of chamber system, required cover over system and details, interior bottom slope (for self-cleansing), chart of storage values, length, width and height, capacity, entry ports (maintenance) etc. UG storage to provide actual 2- and 100-year event storage requirements.

In regard to all proposed UG storage, ground water levels (and in particular HGW levels) will need to be reviewed to ensure that the proposed system does not become surcharged and thereby ineffective.

Modeling can be provided to ensure capacity for both storm and sanitary sewers for the proposed development by City's Water Distribution Dept. – Modeling Group, through PM and upon request.

c. Please note that the minimum orifice dia. for a plug style ICD is 83mm and the minimum flow rate from a vortex ICD is 6 L/s in order to reduce the likelihood of plugging.

12. Grading

a. Low Impact Development (LID) measures are to be implemented and infiltration, erosion and water quality targets achieved. The site needs be designed in conformity with high-level studies and allow for available area(s) to implement suitable LID practices onsite to meet the infiltration targets. Provide detailed infiltration calculations and supporting documentation.

b. Post-development site grading shall match existing property line grades to minimize disruption to the adjacent residential properties. A topographical plan of survey shall be provided as part of the submission and a note provided on the plans.

c. Please provide an updated survey plan or Pre-Development Drainage Area Plan to define the pre-development drainage areas/patterns. Existing drainage patterns shall be maintained and discussed as part of the proposed SWM solution considering no overland flow path.

d. The consultant should demonstrate that any surface water directed towards the the street or laneway can flow unrestricted and will not adversly affect the adjacent properties.

e. The proposed sprint track is to be sloped away from the field and the drainage is to be directed towards the ROW and the laneway properly without impacting the neighboring properties.

13. Geotechnical Memo

A geotechnical memo is required to demonstrate that the soil conditions are suitable for the proposed sprint track and artificial turf field. The memo should also discuss the required pipe bedding for the artificial turf drain system, and foundation design for a proposed underground stormwater holding tank if applicable. In addition, if an underground holding tank is required the normal high ground water table level (NHGWTL) should be assessed to ensure that the holding tank under side of footing is above the NHGWTL or designed accordingly if below the NHGWTL.

14. Environmental Site Assessment

A Phase I ESA is required to be completed in accordance with Ontario Regulation 153/04 in support of this development proposal to determine the potential for site contamination. Depending on the Phase I recommendations a Phase II ESA may be required.

The Phase I ESA shall provide all the required Environmental Source Information as required by O. Reg. 153/04. ERIS records are available to public at a reasonable cost and need to be included in the ESA report to comply with O.Reg. 153/04 and the Official Plan. The City will not be in a position to approve the Phase I ESA without the inclusion of the ERIS reports.

Official Plan Section 4.8.4:

https://ottawa.ca/en/city-hall/planning-and-development/official-plan-and-master-plans/official-plan/volume-1-official-plan/section-4-review-development-applications#4-8-protection-health-and-safety

With every community, we redefine what's possible.

Stantec is a global leader in sustainable engineering, architecture, and environmental consulting. The diverse perspectives of our partners and interested parties drive us to think beyond what's previously been done on critical issues like climate change, digital transformation, and future-proofing our cities and infrastructure. We innovate at the intersection of community, creativity, and client relationships to advance communities everywhere, so that together we can redefine what's possible.

Stantec Consulting Ltd.
300 - 1331 Clyde Avenue
Ottawa ON K2C 3G4
stantec.com