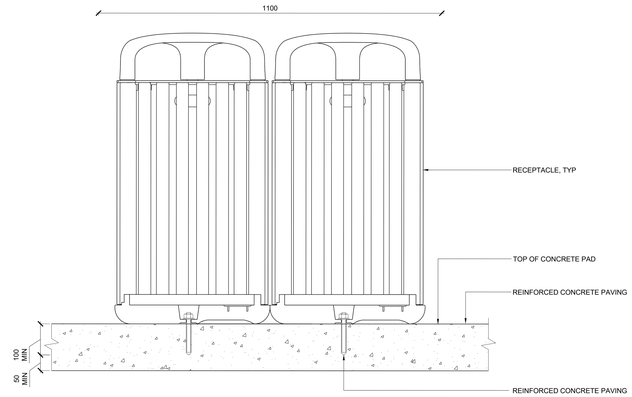

3 TRASH AND RECYCLING RECEPTACLE AT CONCRETE PAVING
SCALE 1 : 5 0 50 100 200mm SECTION

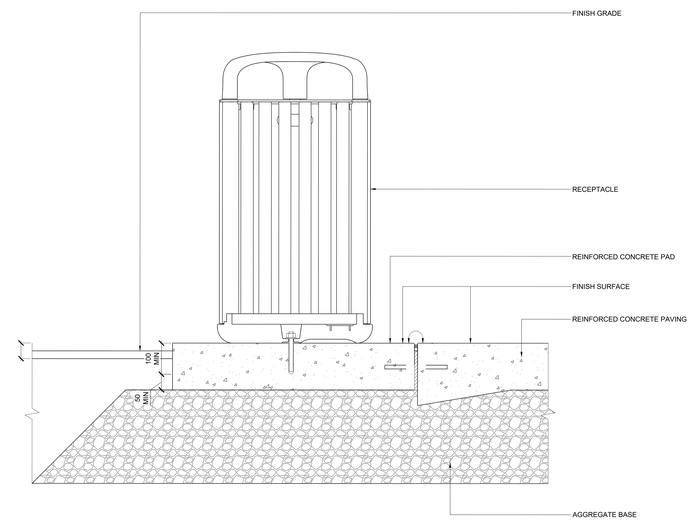

2 TRASH AND RECYCLING RECEPTACLE AT CONCRETE PAD
SCALE 1 : 5 0 50 100 200mm SECTION

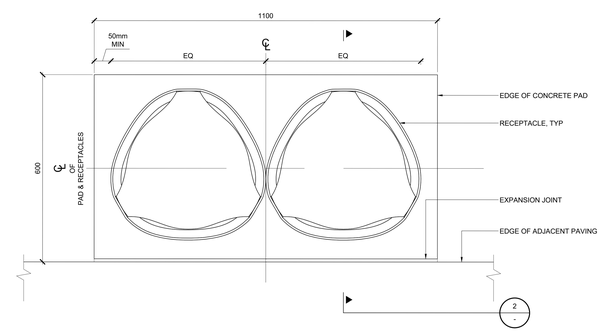

1 CONCRETE PAD AT TRASH AND RECYCLING RECEPTACLE
SCALE 1 : 5 0 50 100 200mm PLAN

PROJECT
THE OTTAWA HOSPITAL NEW CAMPUS DEVELOPMENT - PHASE 4 MAIN HOSPITAL BUILDING
900 CARLING AVE, OTTAWA, ONTARIO

CLIENT
The Ottawa Hospital | L'Hôpital d'Ottawa
Infrastructure Ontario
PCL CONSTRUCTION | EllisDon

CLIENT PROJECT NO.
1070002

KEY PLAN

THIS DRAWING TO BE PRINTED IN COLOUR

NO.	ISSUED	DATE
02	SITE PLAN CONTROL RESUBMISSION	2026-01-12
01	95% DD SUBMISSION	2025-09-19

REVISIONS

DRAWING STATUS
NOT FOR CONSTRUCTION

DISCREPANCIES MUST BE REPORTED IMMEDIATELY TO THE ARCHITECT BEFORE PROCEEDING.
ONLY FIGURED DIMENSIONS ARE TO BE USED. CONTRACTORS MUST CHECK ALL DIMENSIONS ON SITE. THIS DRAWING IS PROTECTED BY COPYRIGHT.

ALL DIMENSIONS ARE SHOWN IN METRIC.

AUTHOR
PWP

PROJECT TEAM
DESIGN-BUILDER PCL/ED. A JOINT VENTURE
ARCHITECTURAL PARKIN ARCHITECTS LIMITED
JODOIN LAMARRE PRATTE ARCHITECTES
ADAMSON ASSOCIATE ARCHITECTS
Mbb ARCHITECTS INC.
STRUCTURAL STEPHENSON ENGINEERING LTD.
BOUTHILLETTE PARIZEAU INC.
MECHANICAL HH ANGUS & ASSOCIATES LTD.
CROSSEY ENGINEERING LTD.
ELECTRICAL MULVEY & BANANI INTERNATIONAL INC.
CIVIL IRSP CANADA INC.
LANDSCAPE VERTICON DESIGN INC.
PWP LANDSCAPE ARCHITECTURE
BUILDING CODE LMDG BUILDING CODE CONSULTANTS LTD.

AUTHOR PROJECT NO.
PCL2301_C

STAMP | STAMP

DRAWING TITLE
SITE FURNISHING DETAILS

DRAWN -
CHECKED -
SCALE AT 40" x 60" AS NOTED
DATE 19-SEPT-2025
GRAPHIC SCALE AS NOTED

DRAWING NO. **L24-106**
REV NO. **02**

1016 (40") x 1051 (60") (CUSTOM SHEET SIZE)
PLOT DATE: