GARDCO

Site and Area

OptiForm

OPF-M Medium

Gardco OptiForm site and area luminaires are available in three sizes: small, medium and large. Featuring the latest in LED technology, OptiForm achieves up to 192 lumens per watt. Eleven optical distributions are available, suitable for a range of outdoor lighting applications. OptForm features a unique mounting system with a two-piece housing for hassle-free installation. Mounting options include a standard arm, mast arm, and wall mount bracket. Service Tag is a standard feature with every OptiForm luminaire, providing maintenance or upgrade assistance throughout the life of the product.

Project:

Location:

Cat.No:

Type:

Lamps: Qty:

Notes:

Ordering guide

example: OPF-M-A08-840-T4M-AR1-240-BL50-L3-BZ

Luminaire	Configuration (nom. lumens)	Color Temperature	Distribution		Mounting	Voltage
OPF-M						
OPF-M OptiForm Medium Area	**A08** 13,500 lumens	**827**[1] 80CRI 2700K	**AFR** Autofront row	**LCL** LEED corner optic left	**AR1**[2,13] Arm mount (standard)	**120** 120V
	A09 17,000 lumens	**830** 80CRI 3000K	**T2M** Type 2 medium	**LCR** LEED corner optic right	**MAR**[3] Mast arm	**208** 208V
	A10 20,000 lumens	**840** 80CRI 4000K	**T3M** Type 3 medium	**BLC** Back light control	**WAL** Wall mount	**240** 240V
	A11 23,000 lumens	**727**[1] 70CRI 2700K	**T4M** Type 4 medium	**2RL** Type 2 rotated left 90°	**MOS**[4] Mounting ordered separately	**277** 277V
	A12 26,000 lumens	**730** 70CRI 3000K	**T4W** Type 4 wide	**2RR** Type 2 rotated right 270°		**347** 347V
	A13 30,000 lumens	**740** 70CRI 4000K	**T5N** Type 5 narrow	**3RL** Type 3 rotated left 90°		**480** 480V
	A14 32,000 lumens	**750** 70CRI 5000K	**T5M** Type 5 medium	**3RR** Type 3 rotated right 270°		**UNV** 120-277V
	A15 34,000 lumens		**T5W** Type 5 wide	**4RL**[1] Type 4 rotated left 90°		**HVU** 347-480V
				4RR[1] Type 4 rotated right 270°		

Dimming Controls	Sensing	Options (electrical, mechanical, etc)	Finish
The following options include 0-10V Driver		**None** Surge protector 10kV/10kA standard	**Standard textured finish**
none 0-10V dimming driver		**SP2** Surge protector 20kV/10kA (option)	**BK** Black
DLEA[5] Dimming leads externally accessible (controls by others)		**FS1**[11] Single fuse (120, 277, or 347VAC)	**WH** White
FAWS[5,6] Field adjustable wattage selector		**FS2**[11] Double fuse (208, 240, or 480V)	**BZ** Bronze
BL50[5,7,12] Bi-level with motion sensor	**L3** PIR sensor, #3 lens (Required if BL50 is selected)	**PCB**[10,11] Photocontrol button connected to 0-10V driver	**DG** Dark Gray
		TR5 5-pin twist lock receptacle connected to 0-10V driver	**MG** Medium Gray
The following options include SR/DALI Driver	**WIAP sensor options**	**TR7** 7-pin twist lock receptacle connected to D4i compliant driver	**Customer specified**
WIAP[5,8] Wireless Interact (includes SR driver and SR receptacle)	**LB** Low (7'-15' mounting height) sensor, black color housing, wireless Interact, integral	**TLP**[11] 7-pin twist lock receptacle connected to D4i compliant driver w/ 3-pin Photocell	**OC** Special optional color or RAL, consult factory
SRDR[5,8] SR driver connected to Zhaga socket (D4i)	**LW** Low (7'-15' mounting height) sensor, white color housing	**BAC**[1,14] Meets the requirements of the Buy American Act of 1933 (BAA)	**SC** Special color (must supply color chip, requires factory quote)
DynaDimmer: Automatic Profile Dimming	**HB** High (15'-40' mounting height) sensor, black color housing		
CS50[5] Security 50% dimming, 7 hours	**HW** High (15'-40' mounting height) sensor, white color housing		
CM50[5] Median 50% dimming, 8 hours			
CS30[5] Security 30% dimming, 7 hours			
CM30[5] Median 30% dimming, 8 hours			

1. Extended lead time applies. Consult factory for details.
2. Mounts to a square pole with knockout for 4-5" OD round pole.
3. Mounts to a horizontal 2-3/8" OD x 5" Long tenon.
4. Must be ordered with mounting accessory. Photocell option (TR7) must be selected with mounting accessory. See Page 2 for options.
5. Not available with other dimming control options (mutually exclusive).
6. Not available with motion sensor (physical restriction).
7. Must be specified with a motion sensor lens (L2 or L3).
8. Not available with PCB, TR5.
9. Must be specified with a motion sensor LW, LB, HW, HB.
10. Not available in 347, 480, or HVU.
11. Must specify input voltage.
12. Not available with TR7, TLP.
13. OPF-RMB accessory recommended for retrofit applications.
14. Failure to properly select the "BAC" suffix could result in you receiving product that is not BAA compliant product with no recourse for an RMA or refund. This BAC designation hereunder does not address (i) the applicability of, or availability of a waiver under, the Trade Agreements Act, or (ii) the "Buy America" domestic content requirements imposed on states, localities, and other non-federal entities as a condition of receiving funds administered by the Department of Transportation or other federal agencies.

interact

DARKSKY APPROVED Reduces light pollution Certified by DarkSky.org

OPF-M OptiForm medium

Site & area luminaire

Shielding Accessory Kits (order separately)

OPF-M-HIS-2	Internal house side shields. For optic Types T2M, T3M, and T5N. qty 2
OPF-M-HIS-T4-2	Internal house side shield for optic types T4M and T4W. qty 2
OPF-M-HIS-5M/5W-2	Internal house side shield for optic types T5M and T5W. qty 2

Luminaire Accessories (order separately)

Pole Mount Fusing	
FP1[11]	Pole mount single fuse (120V, 277V, or 347V)
FP2[11]	Pole mount double fuse (208V, 240V, or 480V)
FP3[11]	Pole mount double fuse canadian double pull (208V, 240V, or 480V)
Photocell Accessories	
P400S	Shorting cap

Mountings (boxed and shipped separately)

Must choose Mounting Ordered Separately (MOS) selection for mounting option of luminaire. Useful for attachment of arm to pole prior to luminaire installation.
(F) Must specify finish

Standard Arm	
OPF-AR1-(F)[2,13]	Standard arm mount
OPF-AR1-TR7-(F)[2,13]	Standard arm mount with 7-pin (TR7) receptacle
Wall Mount	
OPF-WAL-(F)	Wall mount bracket
OPF-WAL-TR7-(F)	Wall mount with 7-pin (TR7) receptacle
Mast Arm	
OPF-MAR-(F)[3]	Mast arm mount
OPF-MAR-TR7-(F)[3]	Mast arm mount with 7-pin (TR7) receptacle

Mounting Accessories

OPF-RMB	Retrofit Mounting Bolster Plate for attaching OptiForm to existing poles. Recommended for retrofit applications.
OPF-RPA	Round Pole Adapter. Fits to 3"- 3.9" O.D. pole. Painted black.

Pole Top Fitters

(F) Must specify finish

PTF2 - Pole top fitter fits 2 3/8 - 2 1/2" OD x 4" depth tenon	
PTF2-1-90-(F)	1 luminiare at 90°
PTF2-2-90-(F)	2 luminiares at 90°
PTF2-3-90-(F)	3 luminiares at 90°
PTF2-4-90-(F)	4 luminiares at 90°
PTF2-2-180-(F)	2 luminiares at 180°
PTF2-3-120-(F)	3 luminiares at 120°
PTF3 - Pole top fitter fits 3-3 1/2" OD x 6" depth tenon	
PTF3-1-90-(F)	1 luminiare at 90°
PTF3-2-90-(F)	2 luminiares at 90°
PTF3-3-90-(F)	3 luminiares at 90°
PTF3-4-90-(F)	4 luminiares at 90°
PTF3-2-180-(F)	2 luminiares at 180°
PTF3-3-120-(F)	3 luminiares at 120°

Optical Distributions

Type 2 Medium

Type 3 Medium

Type 4 Medium

Type 4 Wide

Type 5 Narrow

Type 5 Medium

Type 5 Wide

Autofront Row

Back Light Control

LCL

LCR

OPF-M OptiForm medium

Site & area luminaire

OPF-M Area Optic Lumen values

Performance Package	System Watts	Distribution Type	70 CRI 3000K			70 CRI 4000K			70 CRI 5000K		
			Lumen Output	BUG Rating	Efficacy (LPW)	Lumen Output	BUG Rating	Efficacy (LPW)	Lumen Output	BUG Rating	Efficacy (LPW)
A08	74	T2M	12994	B3-U0-G3	175	13738	B3-U0-G3	185	13738	B3-U0-G3	185
		T3M	12890	B3-U0-G3	173	13628	B3-U0-G3	183	13628	B3-U0-G3	183
		T4M	13064	B2-U0-G2	176	13811	B2-U0-G2	186	13811	B2-U0-G2	186
		T5M	13465	B4-U0-G2	181	14236	B4-U0-G2	191	14236	B4-U0-G2	191
		AFR	13458	B3-U0-G3	181	14228	B3-U0-G3	191	14228	B3-U0-G3	191
		T4W	12438	B2-U0-G3	167	13150	B2-U0-G3	177	13150	B2-U0-G3	177
		T5N	13370	B4-U0-G2	180	14136	B4-U0-G2	190	14136	B4-U0-G2	190
		T5W	12873	B4-U0-G2	173	13610	B4-U0-G2	183	13610	B4-U0-G2	183
		LCL	7070	B1-U0-G2	95	7474	B1-U0-G2	100	7474	B1-U0-G2	100
		LCR	7070	B1-U0-G2	95	7474	B1-U0-G2	100	7474	B1-U0-G2	100
		BLC	9060	B1-U0-G2	122	9579	B1-U0-G2	129	9579	B1-U0-G2	129
A09	93	T2M	16158	B3-U0-G3	174	17083	B3-U0-G3	184	17083	B3-U0-G3	184
		T3M	16029	B3-U0-G3	173	16947	B3-U0-G3	183	16947	B3-U0-G3	183
		T4M	16245	B2-U0-G3	175	17175	B2-U0-G3	185	17175	B2-U0-G3	185
		T5M	16744	B4-U0-G2	180	17703	B4-U0-G2	191	17703	B4-U0-G2	191
		AFR	16736	B3-U0-G3	180	17693	B3-U0-G3	191	17693	B3-U0-G3	191
		T4W	15467	B2-U0-G3	167	16352	B2-U0-G3	176	16352	B2-U0-G3	176
		T5N	16626	B4-U0-G2	179	17578	B4-U0-G2	189	17578	B4-U0-G2	189
		T5W	16008	B4-U0-G3	172	16924	B4-U0-G3	182	16924	B4-U0-G3	182
		LCL	8791	B1-U0-G2	95	9295	B1-U0-G2	100	9295	B1-U0-G2	100
		LCR	8791	B1-U0-G2	95	9295	B1-U0-G2	100	9295	B1-U0-G2	100
		BLC	11266	B1-U0-G2	121	11911	B1-U0-G2	128	11911	B1-U0-G2	128
A10	112	T2M	19256	B3-U0-G3	173	20357	B3-U0-G3	183	20357	B3-U0-G3	183
		T3M	19102	B3-U0-G3	171	20195	B3-U0-G3	181	20195	B3-U0-G3	181
		T4M	19359	B2-U0-G3	174	20467	B3-U0-G3	184	20467	B3-U0-G3	184
		T5M	19954	B4-U0-G2	179	21096	B4-U0-G2	189	21096	B4-U0-G2	189
		AFR	19944	B3-U0-G3	179	21085	B3-U0-G3	189	21085	B3-U0-G3	189
		T4W	18432	B3-U0-G3	165	19487	B3-U0-G3	175	19487	B3-U0-G3	175
		T5N	19813	B4-U0-G2	178	20947	B4-U0-G2	188	20947	B4-U0-G2	188
		T5W	19077	B4-U0-G3	171	20169	B5-U0-G3	181	20169	B5-U0-G3	181
		LCL	10477	B1-U0-G2	94	11076	B2-U0-G2	99	11076	B2-U0-G2	99
		LCR	10477	B1-U0-G2	94	11076	B1-U0-G2	99	11076	B1-U0-G2	99
		BLC	13426	B1-U0-G2	120	14194	B1-U0-G2	127	14194	B1-U0-G2	127
A11	131	T2M	22348	B3-U0-G3	171	23626	B3-U0-G3	180	23626	B3-U0-G3	180
		T3M	22169	B3-U0-G3	169	23438	B3-U0-G3	179	23438	B3-U0-G3	179
		T4M	22468	B3-U0-G3	172	23753	B3-U0-G3	181	23753	B3-U0-G3	181
		T5M	23158	B4-U0-G2	177	24483	B4-U0-G2	187	24483	B4-U0-G2	187
		AFR	23146	B3-U0-G3	177	24471	B3-U0-G3	187	24471	B3-U0-G3	187
		T4W	21392	B3-U0-G4	163	22616	B3-U0-G4	173	22616	B3-U0-G4	173
		T5N	22995	B4-U0-G2	176	24311	B4-U0-G2	186	24311	B4-U0-G2	186
		T5W	22140	B5-U0-G3	169	23407	B5-U0-G3	179	23407	B5-U0-G3	179
		LCL	12159	B2-U0-G2	93	12855	B2-U0-G2	98	12855	B2-U0-G2	98
		LCR	12159	B1-U0-G2	93	12855	B1-U0-G2	98	12855	B1-U0-G2	98
		BLC	15582	B1-U0-G2	119	16474	B1-U0-G3	126	16474	B1-U0-G3	126

OPF-M OptiForm medium

Site & area luminaire

OPF-M Area Optic Lumen values (cont'd)

Performance Package	System Watts	Distribution Type	70 CRI 3000K			70 CRI 4000K			70 CRI 5000K		
			Lumen Output	BUG Rating	Efficacy (LPW)	Lumen Output	BUG Rating	Efficacy (LPW)	Lumen Output	BUG Rating	Efficacy (LPW)
A12	150	T2M	25049	B3-U0-G3	167	26482	B3-U0-G3	176	26482	B3-U0-G3	176
		T3M	24849	B3-U0-G3	165	26271	B3-U0-G3	175	26271	B3-U0-G3	175
		T4M	25183	B3-U0-G4	168	26625	B3-U0-G4	177	26625	B3-U0-G4	177
		T5M	25957	B5-U0-G3	173	27443	B5-U0-G3	183	27443	B5-U0-G3	183
		AFR	25944	B3-U0-G3	173	27429	B3-U0-G3	183	27429	B3-U0-G3	183
		T4W	23978	B3-U0-G4	160	25350	B3-U0-G4	169	25350	B3-U0-G4	169
		T5N	25775	B4-U0-G2	172	27250	B4-U0-G2	181	27250	B4-U0-G2	181
		T5W	24816	B5-U0-G3	165	26237	B5-U0-G3	175	26237	B5-U0-G3	175
		LCL	13629	B2-U0-G2	91	14409	B2-U0-G2	96	14409	B2-U0-G2	96
		LCR	13629	B2-U0-G2	91	14409	B2-U0-G2	96	14409	B2-U0-G2	96
		BLC	17465	B1-U0-G3	116	18465	B1-U0-G3	123	18465	B1-U0-G3	123
A13	176	T2M	28766	B3-U0-G3	163	30412	B3-U0-G3	173	30412	B3-U0-G3	173
		T3M	28536	B3-U0-G4	162	30169	B3-U0-G4	171	30169	B3-U0-G4	171
		T4M	28920	B3-U0-G4	164	30575	B3-U0-G4	173	30575	B3-U0-G4	173
		T5M	29809	B5-U0-G3	169	31515	B5-U0-G3	179	31515	B5-U0-G3	179
		AFR	29794	B4-U0-G4	169	31499	B4-U0-G4	179	31499	B4-U0-G4	179
		T4W	27536	B3-U0-G4	156	29111	B3-U0-G4	165	29111	B3-U0-G4	165
		T5N	29599	B5-U0-G3	168	31293	B5-U0-G3	177	31293	B5-U0-G3	177
		T5W	28499	B5-U0-G3	162	30130	B5-U0-G3	171	30130	B5-U0-G3	171
		LCL	15651	B2-U0-G2	89	16547	B2-U0-G2	94	16547	B2-U0-G2	94
		LCR	15651	B2-U0-G2	89	16547	B2-U0-G2	94	16547	B2-U0-G2	94
		BLC	20057	B1-U0-G3	114	21205	B1-U0-G3	120	21205	B1-U0-G3	120
A14	190	T2M	30449	B4-U0-G4	161	32191	B4-U0-G4	170	32191	B4-U0-G4	170
		T3M	30206	B3-U0-G4	159	31934	B3-U0-G4	168	31934	B3-U0-G4	168
		T4M	30612	B3-U0-G4	161	32364	B3-U0-G4	171	32364	B3-U0-G4	171
		T5M	31553	B5-U0-G3	166	33359	B5-U0-G3	176	33359	B5-U0-G3	176
		AFR	31537	B4-U0-G4	166	33342	B4-U0-G4	176	33342	B4-U0-G4	176
		T4W	29147	B3-U0-G4	154	30815	B3-U0-G4	163	30815	B3-U0-G4	163
		T5N	31331	B5-U0-G3	165	33124	B5-U0-G3	175	33124	B5-U0-G3	175
		T5W	30166	B5-U0-G4	159	31892	B5-U0-G4	168	31892	B5-U0-G4	168
		LCL	16567	B2-U0-G2	87	17515	B2-U0-G2	92	17515	B2-U0-G2	92
		LCR	16567	B2-U0-G2	87	17515	B2-U0-G2	92	17515	B2-U0-G2	92
		BLC	21230	B1-U0-G3	112	22445	B1-U0-G3	118	22445	B1-U0-G3	118
A15	202	T2M	31896	B4-U0-G4	158	33721	B4-U0-G4	167	33721	B4-U0-G4	167
		T3M	31641	B3-U0-G4	157	33452	B4-U0-G4	166	33452	B4-U0-G4	166
		T4M	32067	B3-U0-G4	159	33902	B3-U0-G4	168	33902	B3-U0-G4	168
		T5M	33052	B5-U0-G3	164	34944	B5-U0-G3	173	34944	B5-U0-G3	173
		AFR	33035	B4-U0-G4	164	34926	B4-U0-G4	173	34926	B4-U0-G4	173
		T4W	30532	B3-U0-G4	151	32279	B3-U0-G5	160	32279	B3-U0-G5	160
		T5N	32820	B5-U0-G3	163	34698	B5-U0-G3	172	34698	B5-U0-G3	172
		T5W	31600	B5-U0-G4	157	33408	B5-U0-G4	166	33408	B5-U0-G4	166
		LCL	17354	B2-U0-G3	86	18347	B2-U0-G3	91	18347	B2-U0-G3	91
		LCR	17354	B2-U0-G3	86	18347	B2-U0-G3	91	18347	B2-U0-G3	91
		BLC	22239	B1-U0-G3	110	23512	B1-U0-G3	117	23512	B1-U0-G3	117

OPF-M OptiForm medium

Site & area luminaire

Predicted Lumen Depreciation Data

Predicted performance derived from LED manufacturer's data and engineering design estimates, based on IESNA LM-80 methodology. Actual experience may vary due to field application conditions. L_{70} is the predicted time when LED performance depreciates to 70% of initial lumen output. Calculated per IESNA TM21-11. Published L_{70} hours limited to 6 times actual LED test hours

Ambient Temp°C	Calculated L_{70} Hours	L_{70} per TM-21	Lumen Maintenance % at 60,000 hrs
25°C	**>100,000 hours**	**>102,000 hours**	**96%**

Dimensions

Standard Drill Pattern

Drill Template #5

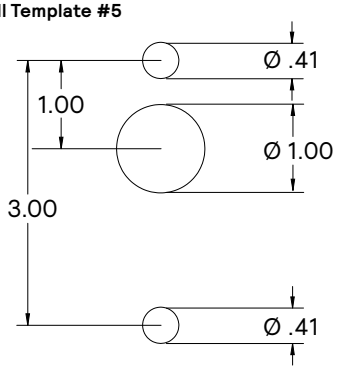

Standard Arm Mounting Hole Pattern

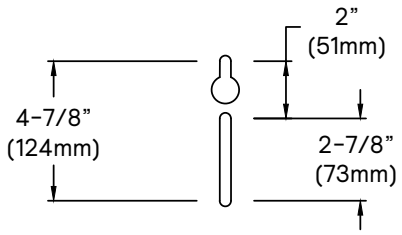

OPF-M OptiForm medium

Site & area luminaire

Dimensions

OptiForm Standard Arm

Weight: 13 lb (5.9 kg)

EPA: 0.15 ft^2 (0.014 m^2)

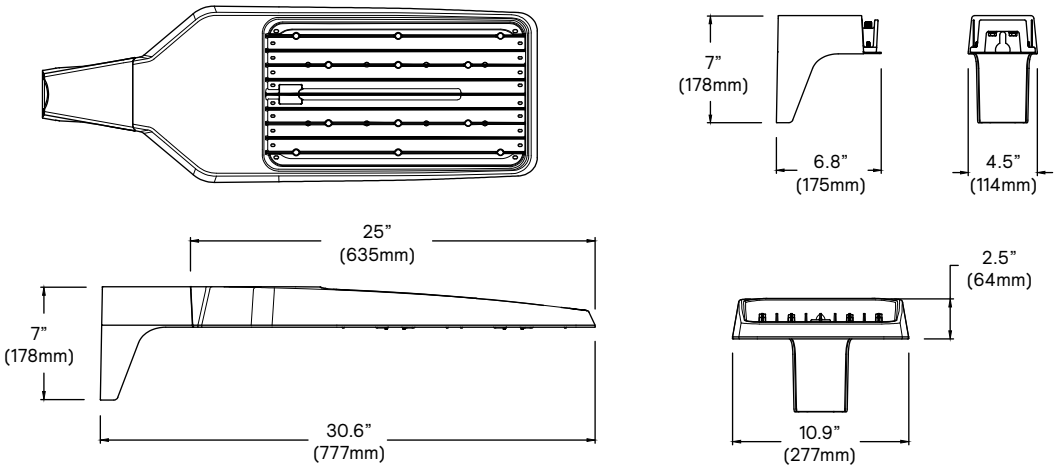

OptiForm Mast Arm

Weight: 14.6 lb (6.6 kg)

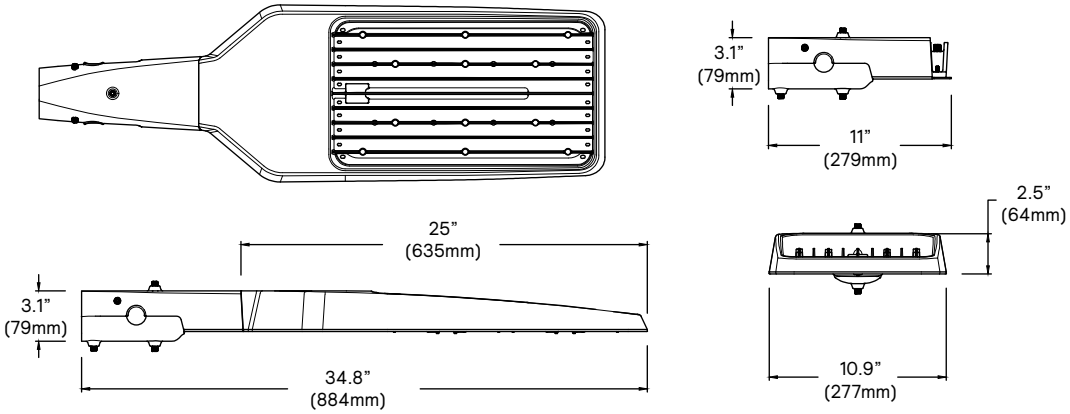

OptiForm Wall Mount

Weight: 13.5lb (6.1 kg)

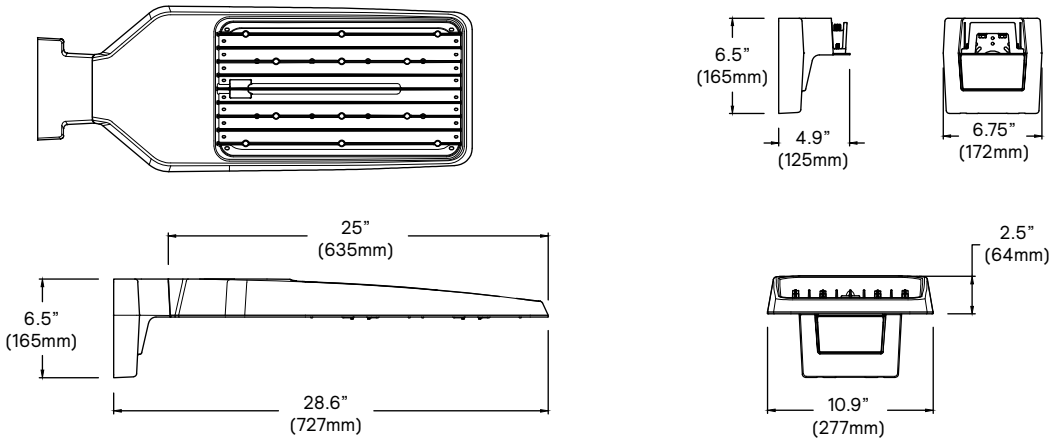

OPF-M OptiForm medium

Site & area luminaire

Specifications

Housing

Housing and door constructed of low copper die cast Aluminum alloy (A360) with detachable arms for quick mounting. Heatsink is integral to the housing providing passive cooling of LEDs to maintain long LED life. Luminaire housing rated to IP65, LED Modules rated IP66, tested in accordance to Section 9 of IEC 60598-1. OptiForm carries and impact rating of IK08.

Vibration resistance

OptiForm is tested and rated to standards set forth in ANSI C136.31-2018 Level 2 for Bridge and Overpass applications.

Light engine

Light engine comprises of a module of 40-LED aluminum metal clad board fully sealed with optics: Medium = 2 Modules with 80 LEDs, Large = 4 modules with 160 LEDs. Module is RoHS compliant. Color temperature as per ANSI/NEMA bin 2700 Kelvin nominal (2725 ±145K), 3000 Kelvin nominal (3045K +/- 175K) or 4000 Kelvin nominal (3985K +/- 275K), CRI 70 Min. 75 Typical. Other CCT/CRI also available, consult factory. LED light engine is rated IP66 in accordance to Section 9 of IEC 60598-1.

Energy saving benefits

System efficacy up to 191 lms/W with significant energy savings over Pulse Start Metal Halide luminaires. Optional control options provide added energy savings during unoccupied periods.

Optical systems

Type 2M, 3M, 4M, 4W, 5, 5M, 5W, AFR, LCL, LCR, and BLC distributions available. Internal shield option mounts to LED optics and is available with Type 2M, 3M, and 4M distributions, including a dedicated BLC and L/R Corner optics to provide the best backlight control possible for stringent requirements around property lines. Types 2M, 3M and 4M when specified and used as rotated, are factory set only. Performance tested per LM-79 and TM-15 (IESNA) certifying its photometric performance. Luminaire designed with 0% uplight (U0 per IESNA TM-15).

Mounting

Standard luminaire arm mounts to square poles with knock-out on the arm to allow for mounting to 4" O.D. round poles. Standard arm casting can accomodate existing bolt spacing from 2" to 4-7/8". It is recommended to use the bolster plate kit OPF RMB when it's not a new installation or if the mounting holes are larger than 0.41" (10mm).

OptiForm features a Mast Arm for Mounting to 2-3/8x4" tenon as well as wall mount casting for exterior building mount applications.

Control options

Dimming Leads Externally Accessible (DLEA): Access to 0-10V dimming leads supplied through back of luminaire (for secondary dimming controls by others). Cannot be specified with other control options.

Sensor Ready Zhaga Socket Connector (SRDR): Product is D4i Certified and equipped with Sensor Ready drivers connected to 4-pin Zhaga Book 18 compliant receptacle designed for sensor and other control system applications. Receptacle is rated IP66 assembly in a compact design that provides a sealed electrical interface and rated UV resistance, mounted on underside of the luminaire, protective dust cap included. When a controller not provided by Signify is used with Sensor Ready Zhaga socket connector, the controller must be certified to work with the Xitanium SR LED drivers as part of the SR certified program. SRDR can be used with NEMA 7-pin twist lock receptacle, which is mounted on top of the luminaire.

Automatic Profile Dimming (CS/CM/CE/CA): Standard dimming profiles provide flexibility towards energy savings goals while optimizing light levels during specific dark hours. Dimming profiles include two dimming settings including dim to 30% or 50% of the total lumen output. When used in combination with motion response it overrides the controller's schedule when motion is detected. After 5 minutes with no motion, it will return to the automatic diming profile schedule. Automatic dimming profile scheduled with the following settings:

- **CS50/CS30:** Security for 7 hours night duration (Ex., 11 PM - 6 AM)
- **CM50/CM30:** Median for 8 hours night duration (Ex., 10 PM - 6 AM)

All above profiles are calculated from mid point of the night. Dimming is set for 6 hours after the mid point and 1 or 2 hours before depending of the duration of dimming. Cannot be used with other dimming control options

Field Adjustable Wattage Selector (FAWS): Luminaire equipped with the ability to manually adjust the wattage in the field to reduce total luminaire lumen output and light levels. Comes pre-set to the highest position lumen output selected. Use chart below to estimate reduction in lumen output desired. Cannot be used with other control options or motion response.

FAWS Position	Percent of Typical Lumen Output	FAWS Position	Percent of Typical Lumen Output
1	25%	**6**	80%
2	50%	**7**	85%
3	55%	**8**	90%
4	65%	**9**	95%
5	75%	**10**	100%

Note: Typical value accuracy +/- 5%

Motion response options

Bi-Level Infrared Motion Response (BL50): Motion Response module is mounted integral to luminaire factory pre-programmed to 50% dimming when not ordered with other control options. BL50 is set/operates in the following fashion: The motion sensor is set to a constant 50%. When motion is detected by the PIR sensor, the luminaire returns to full power/light output. Dimming on low is factory set to 50% with 5 minutes default in "full power" prior to dimming back to low. When no motion is detected for 5 minutes, the motion response system reduces the wattage by 50%, to 50% of the normal constant wattage reducing the light level. Other dimming settings can be provided if different dimming levels are required (contact Technical Support for details).

Infrared Motion Response with Other Controls: When used in combination with other controls (Automatic Dimming Profile), motion response device will simply override controller's schedule with the added benefits of a combined dimming profile and sensor detection. In this configuration, the motion response device cannot be re-programmed with FSIR-100 Wireless Remote Programming Tool. The profile can only be re-programmed via the controller.

Infrared Motion Response Lenses (L3): Infrared Motion Response Integral module is available with two different sensor lens types to accommodate various mounting heights and occupancy detection ranges. Lens #2 is designed for mounting heights 8' to 15'. Lens #3 is designed for higher mounting heights up to 20' with a 40' diameter coverage area. See charts for approximate detection patterns:

MR3 Luminaire or remote mount controller with #3 lens

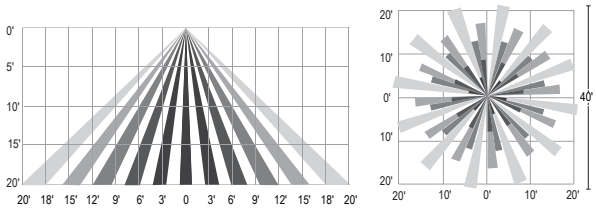

Outdoor Interact (WIAP): Connected sensor with integral occupancy and daylight sensing, supports wireless mesh connectivity. Sensor works in the standalone mode when configured without a gateway. When used with a gateway you are able to access additional functionalities such as energy monitoring, scheduling and BMS integration. Interact offers an App, a portal and a broad portfolio of Interact-ready Indoor and Outdoor luminaires, lamps and retrofit kits all working on the same system. The App provides flexibility to choose between a standalone or gateway mode. Setup with the gateway requires wired Internet access to the gateway. WIAP includes SR driver and SR receptacle. Daylight harvesting supported through dimming - activated via the Interact App. Sensors IP66 rated.

For more information on Interact Pro visit:

www.interact-lighting.com/interactproscalablesystem

OPF-M OptiForm medium

Site & area luminaire

Specifications (cont'd)

LB or LW low sensor

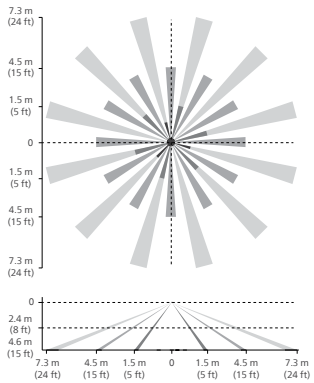

HB or HW high sensor

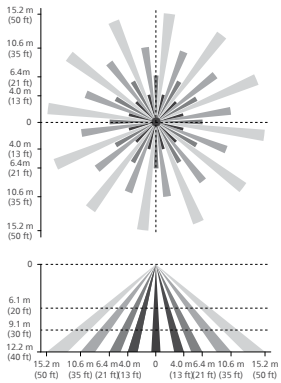

Note: The beam patterns shown are intended solely as a general guide and are not to scale. Sensing capabilities and coverage area depend on many factors including the size, speed and direction of travel of persons and vehicles; sensor mounting height; environmental and site conditions; etc.

Electrical

Twist-Lock Receptacle (TR7/TLP): Twist-Lock Receptacle with 7 pins enabling dimming with additional functionality (by others) can be used with a twist-lock photoelectric cell or a shorting cap. Dimming Receptacle Type D-24 (7-pin) in accordance to ANSI C136.41. Can be used with third-party control system. Receptacle located on top of luminaire arm. When specifying receptacle with twist-lock photoelectric cell, voltage must be specified. When ordering 7-pin Twist-lock receptacle (TR7), all 7 pins are wired to respective pins with the Sensor Ready (SR) driver, and photocell or shorting cap is not included. When ordering a twist-lock receptacle with a photocell (TLP), the receptacle used is a 7-pin receptacle, with pins 6 and 7 connected to SR DALI driver. 0-10V dimming leads (pins 4 and 5) are connected if not ordered with any other dimming option.

Twist-Lock Receptacle (TR5/TR7): Twist Lock Receptacle with 5 pins enabling dimming or with 7 pins with additional functionality (by others) can be used with a twistlock photoelectric cell or a shorting cap. Dimming Receptacle Type B (5-pin) and Type D-24 (7-pin) in accordance to ANSI C136.41. Can be used with third-party control system. Receptacle located on top of luminaire housing. When specifying receptacle with twistlock photoelectric cell, voltage must be specified. When ordering 7-pin Twist-lock receptacle (TR7), all 7 pins are wired to respective pins with the Sensor Ready (SR) driver, and photocell or shorting cap is not included. When ordering a twist-lock receptacle with a photocell (TLP), the receptacle used is a 7-pin receptacle, with pins 6 and 7 connected to SR DALI driver. 0-10V dimming leads (pins 4 and 5) are connected if not ordered with any other dimming option.

Driver: Driver efficiency (>90% standard). 120-480V available (restrictions apply). Open/short circuit protection. All drivers are 0-10V dimming to 10% power standard, except when using Sensor Ready (SR) drivers, which uses DALI protocol (options CS50/CM50/CS30/CM30, SRDR, and TR7). Drivers are RoHS and FCC Title 47 CFR Part 15 compliant.

Button Photocontrol (PCB): Button style design for internal luminaires mounting applications. The photocontrol is constructed of a high impact UV stabilized polycarbonate housing. Rated voltage of 120V or 208-277V with a load rating of 1000 VA. The photocell will turn on with 1-4Fc of ambient light.

Surge protection (SP1/SP2): Surge protection device tested in accordance with ANSI/IEEE C62.45 per ANSI/IEEE C62.41.2 Scenario I Category C High Exposure 10kV/10kA waveforms for Line-Ground, Line-Neutral and Neutral-Ground, and in accordance with DOE MSSLC Model Specification for LED Roadway Luminaires Appendix D Electrical Immunity High test level 10kV/10kA. 20kV / 10kA surge protection device that provides extra protection beyond the SP1 10kV/10kA level.

Listings

UL/cUL wet location listed to the UL 1598 standard, suitable for use in ambient temperatures from -40° to 40°C (-40° to 104°F). All Optiform configurations are qualified under Design Lights Consortium Premium classification. Consult DLC Qualified Products list to confirm your specific luminaire selection is approved. CCTs 3000K and warmer are Dark Sky Compliant.

Finish

Each standard color luminaire receives a fade and abrasion resistant, electrostatically applied, thermally cured, triglycidal isocyanurate (TGIC) textured polyester powdercoat finish. Standard colors include bronze (BZ), black (BK), white (WH), dark gray (DGY), and medium gray (MGY). Consult Factory for specs on optional, custom colors, and marine grade paint.

Service Tag

Each individual luminaire is uniquely identifiable, thanks to the Service tag application. With a simple scan of a QR code, placed on the inside of the mast door, you gain instant access to the luminaire configuration, making installation and maintenance operations faster and easier, no matter what stage of the luminaire's lifetime. Just download the APP and register your product right away. For more details visit: signify.com

Warranty

OptiForm luminaires feature a 5-year limited warranty
See signify.com/warranties for complete details and exclusions.

© 2024 Signify Holding. All rights reserved. The information provided herein is subject to change, without notice. Signify does not give any representation or warranty as to the accuracy or completeness of the information included herein and shall not be liable for any action in reliance thereon. The information presented in this document is not intended as any commercial offer and does not form part of any quotation or contract, unless otherwise agreed by Signify.

GENLYTE SOLUTIONS
a signify business

Signify North America Corp.
400 Crossing Blvd, Suite 600
Bridgewater, NJ 08807
Telephone: 800-555-0050

Signify Canada Ltd.
281 Hillmount Road,
Markham, ON, Canada L6C 2S3
Telephone: 800-668-9008

All trademarks are owned by Signify Holding or their respective owners.