LRL

ENGINEERING | INGÉNIERIE

Servicing and Stormwater Management Report

30 Cleary Avenue Odayanhaway Development,
30 Cleary Avenue,
Ottawa, ON

Prepared for:

Theia Partners

Attention:
Justin Robitaille

LRL File No.: 230437.00

November 12th, 2025
Rev October 14th , 2026

5430 Canotek Road | Ottawa, ON, K1J 9G2 | info@lrl.ca | www.lrl.ca | (613) 842-3434

TABLE OF CONTENTS

1 INTRODUCTION AND SITE DESCRIPTION 1
2 EXISTING SITE AND AVAILABLE SERVICES 2
3 BACKGROUND DOCUMENTS/ STUDIES 2
4 PROPOSED DEVELOPMENT 3
5 WATER SUPPLY SERVICING 3
5.1 Residential Water Demands - Proposed 3
5.2 Residential Water Demands – Existing 5
5.3 Fire Demands 5
5.4 Water Connection Details 6
5.4.1 Secondary Water Service Alignment – To Richmond Road 6
5.5 Hydraulic Analysis 7
6 SANITARY SERVICE 9
6.1 Existing Sanitary Sewer Services 9
6.2 Proposed Sanitary Sewer Design 9
7 STORMWATER MANAGEMENT- PRE-SCHOOL BUILDING AND 851 RICHMOND RD 10
7.1 Existing Stormwater Infrastructure 10
7.2 Existing Stormwater Quantity Control 10
7.3 Proposed Stormwater Quantity Control 10
8 STORMWATER MANAGEMENT 12
8.1 Existing Stormwater Infrastructure 12
8.2 Design Criteria 13
8.3 Water Quantity 13
8.3.1 Water Quantity- NCC Outlet 13
8.3.2 Water Quantity- Cleary Avenue 14
8.4 Water Quality 14
8.5 Method of Analysis 14
8.6 Proposed Stormwater Quality Controls 14
8.7 Proposed Stormwater Quantity Controls 14
8.7.1 Stormwater Quantity Controls- NCC Outlet 14
8.7.1.1 NCC Outlet- Volume control 18
8.7.2 Stormwater Quantity Controls- Cleary Outlet 18

9 EROSION AND SEDIMENT CONTROL 19
10 GEOTECHNICAL SITE CONSIDERATIONS 19
11 CONCLUSION 19
12 REPORT CONDITIONS AND LIMITATIONS 21

APPENDICES

Appendix A — **Site Topographical Survey**

Appendix B — **Site Plan**

Appendix C — **As-Built Road Profiles- Cleary Avenue**

Appendix D — **Water and Fire Demand Calculations**
Boundary Conditions

Appendix E — **Sanitary Calculations**

Appendix F — **Stormwater Management Calculations**
Stormceptor OGS
WATTS Roof Drain
ACO Stormbrixx

Appendix G — **Civil Engineering Drawings**

Appendix H — **NCC Correspondence/ Consultation**

City of Ottawa Correspondence/ Consultation

Appendix I — **Off-Site Stormwater Management Supporting Documents**
ADS Stormtech Chamber

LIST OF TABLES

Table 1: *City of Ottawa Design Guidelines- Water Design Parameters* 4

Table 2: *Development Residential Population Estimate* 4

Table 3: *Existing Residential Water Demands* 5

Table 4: *Summary of Anticipated Demands and Boundary Conditions*..... 8

Table 5: *Summary of Model Results* 9

Table 6: *Storage Volume Summary- Preschool (100 year)*..... 12

Table 7: *Drainage Areas* 16

Table 8: *Stormwater Release Rate & Storage Volume Summary (100 Year)* 17

Table 9: *Stormwater Volume Retention Summary*..... 18

LIST OF FIGURES

Figure 1: Arial View of Subject Lands……..……..……1

Figure 2: Watermain Schematic……..……..……7

1 INTRODUCTION AND SITE DESCRIPTION

LRL Associates LTD. was retained by **Theia Partners** to prepare a Servicing and Stormwater Management Report to support Site Plan Application for a development on the property located at **30 Cleary Avenue** within the City of Ottawa.

The subject site is within the Bay Ward 7, located backing onto the Kichi Zibi Mikan Parkway, accessed via Cleary Avenue and has an approximate area of 2.07 ha. Under the City of Ottawa Zoning by-law, the property is currently zoned as I1A [314] H(13.8). The land consists of three (3) existing buildings, paved areas as well as some landscaping. The subject site can be seen below in Figure 1.

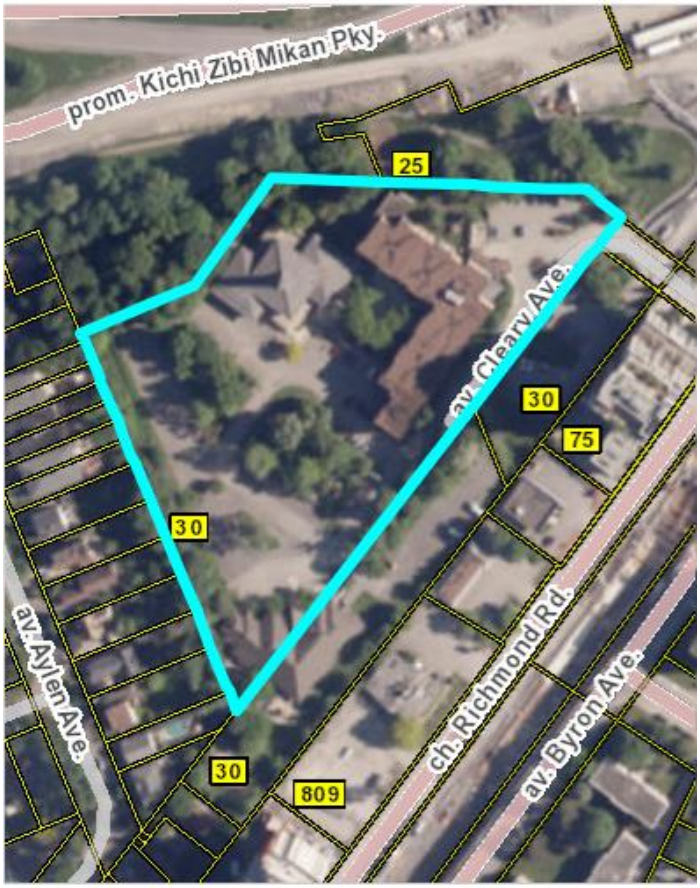

Figure 1: Arial View of Subject Site

This report has been prepared in consideration of the terms and conditions noted above and with the civil drawings prepared for the new development. Should there be any changes in the design features, which may relate to the stormwater and servicing considerations, LRL Associates Ltd. should be advised to review the report recommendations.

2 EXISTING SITE AND AVAILABLE SERVICES

The subject property is currently occupied by three (3) separate building; the Unitarian House of Ottawa (residential building) and The First Unitarian Congregation of Ottawa (church) in the North East portion of the site, as well as the River Parkway Children's Centre (Pre-school) in the south corner of the site. The balance of the property not occupied by buildings is landscape greenspace, and asphalt for vehicular circulation and surface parking.

Given that the property houses development in its current state, there is localized sanitary sewers, water distribution and storm networks utilized to service the existing buildings and surrounding parking lot.

The stormwater management strategy for the River Parkway Children's Centre (pre-school) will be reconfigured as part of the proposed development to ensure that appropriate quantity control measures remain in place. Further details are provided in Section 7 – *Stormwater Management: Pre-school Building and 851 Richmond Road*.

In addition to localized servicing within the property boundary, existing stormwater infrastructure associated with 851 Richmond Road must be maintained and/or re-routed. Currently, runoff from 851 Richmond Road is conveyed to the existing community garden ponds via a 525 mm diameter storm sewer, discharging at a fixed release rate. As part of the proposed development, this storm sewer will be re-routed and continue to outlet at the existing location within the community garden ponds. Further details are provided in Section 7 – *Stormwater Management: Pre-school Building and 851 Richmond Road*.

Based on the topography and site survey information, the property generally slopes in the north direction towards the NCC owned forested land, ultimately discharging into the Ottawa river via a culvert under the Kichi Zibi Mikan parkway. The existing site topographical survey can be found in ***Appendix A.***

The site is accessed via Cleary Avenue. Sewer and watermain mapping, along with as-built information collected from the City of Ottawa (included in ***Appendix C***) indicate the following existing infrastructure located within road entering the property.

Cleary Avenue:

- 250mm Ø PVC Sanitary sewer
- 450mm Ø CONC Storm sewer
- 250mm Ø PVC Watermain.

Additionally, running along the southeast boundary of the subject property is a 1200mm Ø water feeder main located under an easement in this location.

3 BACKGROUND DOCUMENTS/ STUDIES

- Geotechnical Investigation report prepared by WSP dated November 07, 2023
- NCC Stormwater Management Manual

- Pinecrest Westboro SWM Guidelines
- Pre-Consultation Meeting feedback dated May 13, 2025
- 851 Richmond Rd- SWM Brief prepared by Stantec dated March 29, 2018
- 40 Cleary Ave (Pre-School Building)- SWM report prepared by J.L. Richards Ltd. dated January 2007.

4 PROPOSED DEVELOPMENT

The proposed development will be located along the west border of the site, where there is currently asphalt surface parking. It would be comprised of two (2) multistorey buildings, with a shared two- storey underground parking garage. Building one- Market Building (1) will be 16 storeys high and will house 163 units. Building two- OAHS Building (2) will be 6 storeys in height and will house 66 units. The development will have a total of 229 residential units. Additionally, each building will have designated amenity spaces on levels one and the highest storeys.

There are two levels of underground parking, parking level one (1) is shared by both buildings and level 2 is located below market building and has a total of 96 parking spaces. For additional detail of the proposed development, refer to the Site Plan prepared by Figurr Architects Collective included in ***Appendix B.***

5 WATER SUPPLY SERVICING

The subject property lies within the City of Ottawa 1W water distribution network pressure zone. There is an existing 250mm Ø watermain within Cleary Avenue. There are currently two (2) existing fire hydrants within close proximity of the subject property. Refer to ***Appendix D*** for the water pressure zone and location of fire hydrants.

5.1 Residential Water Demands - Proposed

According to the City of Ottawa Water Distribution Guidelines (Technical Bulletin ISDTB-2014-02), since the subject site is anticipated to house more than 50 residential units, it is required to be serviced by two water service laterals, separated by an isolation valve, for redundancy and to avoid creation of a vulnerable service area. Hence, the proposed development is proposed to be serviced via two (2) 250mm Ø service laterals. One of the connections will be via the 250mm Ø watermain within Cleary Avenue. The second connection will be provided through a direct connection into the 200mm Ø water main within Richmond Road via a proposed water service within the Cleary Ave right-of-way. The water services will be connected to both the proposed buildings through the underground parking garage.

Table 1, included below, summarizes the City of Ottawa Design Guidelines design parameters in the preparation of the water demand estimate.

Table 1: *City of Ottawa Design Guidelines- Water Design Parameters*

Design Parameter	Value
Residential Bachelor / 1 Bedroom Apartment	1.4 P/unit
Residential 2 Bedroom Apartment	2.1 P/unit
Residential 3 Bedroom Apartment	3.1 P/unit
Commercial Average Daily Demand	2.8 L/m^2/d
Average Daily Demand	280 L/d/per
Minimum Depth of Cover	2.4 m from top of watermain to finished grade
Desired operating pressure range during normal operating conditions	350 kPa and 480 kPa
During normal operating conditions pressure must not drop below	275 kPa
During normal operating conditions pressure shall not exceed	552 kPa
During fire flow operating conditions pressure must not drop below	140 kPa
**Table updated to reflect technical Bulletin ISDTB-2018-02*	

The interior layout and architectural floor plans have been reviewed, and it was determined that the building will house ***153*** one-bedroom units, ***60*** two-bedroom units, ***16*** three-bedroom units Based on the City of Ottawa Design guidelines for population projection, this translates to approximately **389.8** residents. **Table 2** below summarizes the proposed population count as interpreted using Table 4.1 of the *City of Ottawa Water Distribution Design Guidelines*.

Table 2: *Development Residential Population Estimate*

Unit Type	Persons Per Unit	Number of Units	Population
1 Bedroom Apartment	1.4	153	214.2
2 Bedroom Apartment	2.1	60	126.0
3 Bedroom Apartment	3.1	16	49.6
	Total	**229**	**389.8**

The required water supply requirements for the residential units in the proposed subdivision have been calculated using the following formula:

Where:

$$Q = (q \times P \times M)$$

q = average water consumption (L/capita/day)
P = design population (capita)
M = Peak factor

With reference to *Table 4.2 of the City of Ottawa Water Distribution Design Guidelines and Table (3-3) MOE Peaking Factors*, using an average water consumption rate of 280 L/c/d, a calculated Maximum Daily Demand Factor and Maximum Hour Demand Factor of 3.3 and 5.0, respectively, anticipated demands were calculated as follows:

- Average daily domestic water demand is **1.26** L/s,
- Maximum daily demand is **4.07** L/s, and
- Maximum hourly demand is **6.08** L/s.

5.2 Residential Water Demands – Existing

In addition to the projected demands of the proposed buildings, water demands from the existing buildings were incorporated into the hydraulic model. Metered water consumption data provided by the City (Table 3) was used to determine the Average Daily Demand (ADD) for each property. Maximum Day Demand (MDD) and Maximum Hour Demand (MHD) factors were then applied in accordance with Table 4.2 of the City of Ottawa Water Distribution Design Guidelines, using factors of 2.5 and 2.2 for residential properties, and 1.5 and 1.8 for institutional properties, respectively.

Table 3: *Existing Residential Water Demands*

Address	ADD (L/s)	MDD (L/s)	MHD (L/s)
20 Cleary	0.29	0.72	1.59
30 Cleary	0.02	0.03	0.04
40 Cleary	0.02	0.03	0.04

For greater detail on Water Demand Calculations, please refer to ***Appendix D.***

5.3 Fire Demands

The estimated fire flow for the proposed buildings were calculated in accordance with *ISTB 2024-05*. The following parameters were provided by the contemplated architectural plans:

- Type of construction – Non-combustible, Type II construction;
- Occupancy type – Limited Combustibility (As per FUS 2020- Residential Occupancies);
- Sprinkler Protection – Fully Supervised and automatic Sprinkler System.

The estimated fire flow demand was estimated to be **10,000 L/min (167 L/s)**, see ***Appendix D*** for details.

There are two (2) private hydrants located within 75 m of the proposed development. They can provide the development with a total available fire flow of 11,356 L/min. An additional hydrant has been proposed in front of the site to provide the fire coverage to the farthest corner of the buildings. Refer to ***Appendix D*** for fire hydrant locations. A joint use agreement will be required to utilize the private hydrants.

The existing hydrant in front of the pre-school building will be required to be moved in the landscape area North-West of the existing STM CBMH3.

5.4 Water Connection Details

Based on development demands, two (2) water service locations are required. One of the connections will be via a proposed 250mm Ø water service connected to the 250mm Ø watermain within Cleary Avenue, and the second one will be through the existing 200mm Ø watermain within Richmond Rd via a proposed 250mm Ø water service within Cleary Ave.

5.4.1 Secondary Water Service Alignment – To Richmond Road

A secondary (contingent) municipal water service connection is proposed to enhance system redundancy and ensure compliance with City of Ottawa servicing requirements for multi-residential and mixed-use developments.

- **Alignment Overview**

The proposed second connection will extend from the development site through the Cleary Ave right of way adjacent to existing utility network connecting to the existing 200mm Ø municipal watermain within Richmond Road. The routing will traverse a defined utility corridor located within the Cleary Ave right-of-way.

Key design elements include:

- Routing through Cleary Ave right-of way avoiding conflicts with existing storm and sanitary sewer network, watermain, and other existing utilities;
- Provide a min 2.5m horizontal separation between the proposed water service and the existing sewer network. If that's not feasible, provide a minimum of 0.5m vertical separation between the edge of the water service and the crown of sewer.
- Strategic placement of isolation valves at both entry and exit points of the adjacent structure, facilitating operational control and future maintenance;
- A municipal connection at Richmond Road, designed in accordance with City of Ottawa Standard Detail W25.1.

The proposed routing and connection details, including plan and profile drawings, valve locations, and integration with the site's internal servicing network, are provided in the enclosed engineering drawing set (refer to Drawing C401, C402 – Water Servicing Plan and Detail) and as shown in Figure 2.

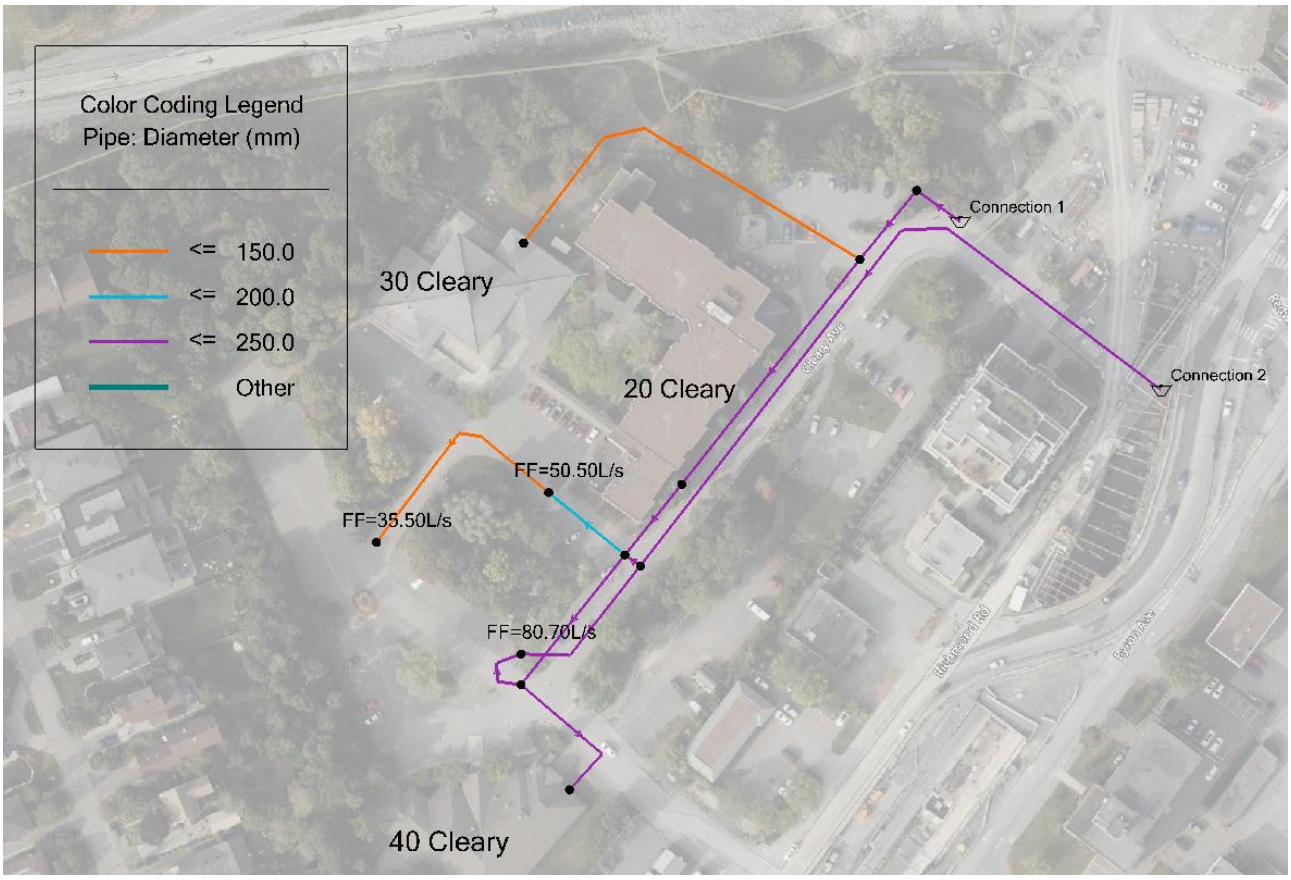

Figure 2: Watermain Schematic and Fire Flow Distribution

- **Construction and Operational Considerations**

Connection to the Richmond Road watermain will occur under City supervision and in accordance with all applicable municipal and provincial standards, including:

- OPSS 441 and City of Ottawa specifications for watermain connections;
- Pressure testing, flushing, and disinfection prior to commissioning;
- Where feasible, connections to the existing private watermain will be completed under pressure using a tapping sleeve and valve to avoid disruption of water service to existing buildings;
- Where a shutdown is unavoidable, the work will be coordinated with the property owner and the City and will include advance notification, temporary water supply provisions for affected buildings as required, and implementation of fire watch measures for the duration of the outage.

5.5 Hydraulic Analysis

The City of Ottawa was contacted to obtain boundary conditions associated with the estimated water demand, as indicated in the boundary request correspondence included in ***Appendix D***.

The boundary conditions received account for existing demands. **Table 4 below summarizes the boundary** conditions for the proposed development.

Table 4: ***Summary of Anticipated Demands and Boundary Conditions***

Design Parameter	**Anticipated Demand (L/s)**	**Boundary Conditions**	
		Connection 1 @ Cleary (m H2O / kPa)	**Connection 2 @ Richmond (m H2O / kPa)**
Average Daily Demand	1.26	115.2 / 530.72	115.2 / 530.72
Max Day + Fire Flow (per FUS)	4.07 + 80.7	98.0 / 361.99	100.3 / 384.5
Peak Hour	6.08	108.7 / 466.96	108.7 / 466.96
Water demand calculation per City of Ottawa Water Design guidelines. ***See Appendix B*** *for details.*			

As indicated in Table 4, pressures in all scenarios meet the required pressure range stated in Table 1 as per City of Ottawa Design Guidelines. Refer to ***Appendix D for Boundary Conditions***.

Bentley OpenFlows WaterCAD CONNECT Edition was used to evaluate the proposed water transmission and distribution system and confirm the required watermain sizing to meet applicable pressure and flow requirements. The hydraulic model calculates headlosses throughout the system using the selected pipe friction methodology, which accounts for flow rate, pipe diameter, pipe length, and pipe roughness characteristics. In addition, minor losses associated with fittings and appurtenances such as bends, tees, valves, hydrants, and other localized flow restrictions were incorporated where applicable. These friction and minor losses were used to determine hydraulic grade line elevations, available pressures, and residual pressures throughout the network under each operating scenario. A copy of the hydraulic model output is provided in Appendix D.

Two (2) connection points and three (3) operating scenarios were assessed to evaluate the available system pressures under varying demand conditions. Domestic water demands for the existing surrounding properties were based on metered consumption data provided by the City of Ottawa, while demands for the proposed buildings were calculated in accordance with City of Ottawa guidelines, as described above. These demands were incorporated into all operating scenarios assessed. Fire flow demands were determined based on the Fire Underwriters Survey (FUS) methodology. The required fire flow was distributed among the three (3) existing and proposed fire hydrants, with the greatest proportion assigned to the new fire hydrant located at the southern end of the property and supplied by the proposed 250 mm diameter water service, as shown in Figure 2. This approach represents the most conservative operating condition and reflects the anticipated primary fire protection source for the development.

Table 5: ***Summary of Model Results***

Scenario	Demands (PSI)			
	Connection #1		Connection #2	
	Max Pressure	Min Pressure	Max Pressure	Min Pressure
Average Daily Demand*	78.13	75.66	75.37	61.72
Max Hourly Demand+	69.97	66.13	66.06	54.14
Max Daily Demand + Fire Flow~	51.13	45.55	51.19	47.99

* Required pressure range 50-80 psi
+Required Minimum Pressure 40 psi
~ Required Minimum Pressure 20 psi

The analysis confirms that the residual pressure remains above the minimum required pressure ranges under all three (3) scenarios.

Based on these results, the proposed 250 mm PVC water service and the existing 250mm water service pipes are hydraulically adequate and are expected to be able to deliver more than adequate pressure to the proposed building's domestic demands and private fire hydrant during a fire emergency.

6 SANITARY SERVICE

6.1 Existing Sanitary Sewer Services

There is an existing 200mm Ø PVC municipal sanitary sewer within Cleary Avenue which conveys sanitary flows from the pre-school building.

6.2 Proposed Sanitary Sewer Design

The proposed development will be serviced via a single 200mm Ø sanitary service lateral connected to the existing 200mm Ø sanitary sewer within Cleary Avenue via the existing Sanitary MH. The service lateral will be connected to both the proposed buildings through the underground parking garage. Refer to LRL drawing C.401, included in Appendix G, for the proposed sanitary servicing.

The parameters used to calculate the anticipated sanitary flows are residential average population per unit of 1.4 person for single units, 2.1 persons for two-bedroom units, 3.1 persons for three-bedroom units and a residential daily demand of 280 L/p/day, a residential peaking factor of 3.4 and a total infiltration rate of 0.33 L/s/ha. Based on these parameters and the total site area of 0.47 ha, the total anticipated wet wastewater flow was estimated 4.32 L/s. Refer to ***Appendix E*** for further information on the calculated sanitary flows.

As requested in the pre-consultation with City staff, the calculated sanitary demands for the proposed development were coordinated with the City of Ottawa to confirm there is sufficient capacity in the downstream municipal sewers. As per correspondence attached, see Appendix H, the downstream municipal sewers can sufficiently accommodate the increase in sanitary flows from the proposed development.

Based on information available from the as-built profile data along Cleary Avenue provided by the City of Ottawa, the existing 200 mmØ PVC sanitary sewer has a slope of approximately 0.35%

which translates to existing maximum capacity of approximately **35.18 L/s**. The anticipated wet wastewater flows from the contemplated development represent approximately 14.2% of the maximum existing sewer capacity.

7 STORMWATER MANAGEMENT- PRE-SCHOOL BUILDING AND 851 RICHMOND RD

The proposed development encroaches on the existing overland ponding area serving the pre-school building, requiring a redesign of its stormwater storage strategy. It also necessitates the relocation of the existing 525 mm Ø storm sewer conveying flow from 851 Richmond Road to the community garden ponds. This sewer will be realigned through the underground parking of the new building.

7.1 Existing Stormwater Infrastructure

In pre-development conditions, stormwater runoff from the pre-school building is collected by a series of catch basin and manhole structures within the existing driveway/ parking lot, which discharges to the existing 375 mm Ø storm sewer located within Cleary Avenue. An Inlet Control Device (ICD) has been installed at the existing CBMH 3 to regulate the flow from the site to a specified release rate.

Runoff from the 851 Richmond Road building is conveyed to the existing community garden pond via a 525 mm Ø storm sewer that runs along the rear of the pre-school building and connects to the garden area. From there, stormwater is directed to the existing NCC outlet at the north end of the site through a culvert system, consisting of an internal connection between the garden ponds and a 300 mm Ø steel culvert that conveys flow from the pond to the NCC outlet.

Stormwater details, including the pipe network, stormwater quantity controls for Pre-school and 851 Richmon Rd. is included in ***Appendix I.***

7.2 Existing Stormwater Quantity Control

In pre-development conditions, stormwater runoff from the pre-school building that exceeds the allowable release rate is managed through surface ponding within the existing parking lot, as well as storage within the storm sewer system and associated catch basin/manhole structures. A Hydrovex 125VHV-2 Inlet Control Device (ICD) is installed at downstream manhole CBMH3, allowing a flow rate of 18.8 L/s based on a maximum design head of 3.15 m. Roof runoff is directed to the surface via downspouts, with no rooftop storage proposed. The required on-site storage volumes were calculated to be 28.1 m³ for the 5-year storm and 65.1 m³ for the 100-year storm. The maximum available storage volumes are 32.2 m³ and 67.1 m³. this information was obtained from pre-school stormwater management report prepared by J.L Richards Ltd. is included in ***Appendix I.***

The run-off from 851 Richmond Rd is being conveyed at a fixed release rate with the means of an ICD and Roof drains to meet the allowable release rate. Stormwater report for 851 Richmond Rd prepared by Stantec is included in ***Appendix I.***

7.3 Proposed Stormwater Quantity Control

To satisfy the quantity control criteria for the pre-school building due to the revised grading and modified parking lot footprint, stormwater quantity control will be achieved through a combination

of surface ponding, storage within the storm sewer and manhole structures, and a proposed underground stormwater storage chamber. The existing Hydrovex ICD at CBMH 3 will remain as-is limiting flow to 18.8L/s as in pre-development conditions and will require total storage of 65.1 m³ for a 100-yr storm.

The required storage is provided on-site via surface ponding at the parking lot in front of the pre-school entrance and landscape area north of the pre-school building, sewer and structure storage as well as Stormtech underground chambers Model SC-800 (or approved equivalent). The sewer connecting ex CBMH1 to CBMH2, and CBMH2 to CBMH3 will be upsized to provide additional stormwater storage. Surface ponding is proposed at existing CBMH2 with a maximum storage depth of 0.30 m and a 100-year high water level (HWL) elevation of 62.30. Additionally, CBMH1 and CBMH2 will be upsized to 1.50m Ø catch basin manhole structures to increase storage capacity. The existing CBMH3, which is equipped with an ICD and currently receives runoff from adjacent areas, is proposed to be raised to match the 100-year HWL elevation of 62.30. CBMH1 is also proposed to be raised, to accommodate the revised grading adjacent to the proposed building and to mitigate any surface ponding or overflow, as experienced under pre-development conditions. The existing 250mm Ø storm sewer connecting CBMH9 to CBMH1 is proposed to be removed. In its place, an ADS underground storage chamber is proposed within the landscaped area to provide additional volume control. The ADS chamber will be equipped with an isolator row, which will promote ground infiltration. The ADS chamber will be equipped with a catch basin at the inlet (CBMH01A) and another at the outlet (CBMH01B), both of which will also provide surface ponding in the landscaped area with a maximum ponding depth of 0.30 m and a 100-year HWL elevation of 62.30. The landscaped area north of the pre-school building will serve as a surface storage zone. This proposed storage will not impact the existing interlock sidewalk or the proposed generator, as both are situated at higher elevations.

The total proposed surface ponding provides approx. 30.85m^3 of storage, underground sewers and structures provides 18.44m^3 of storage, and the proposed underground chambers provide 20.11 m^3 to provide a total storage of **69.40 m^3** during the 100-year storm event. No surface ponding will occur in the 5-year and 2-year storm events, as all necessary storage requirements will be fully accommodated by the proposed stormwater underground chambers and underground sewer/ structures. Refer to ***Appendix I*** for additional info on Stormtech chambers. The 100-year maximum ponding depths can be found on drawing “C601 – Stormwater Management Plan” of ***Appendix G***.

Table 6 below summarizes the storage volumes available for a 100-yr storm event.

Table 6: ***Storage Volume Summary- Preschool (100 year)***

	Total Available Storage (m^3)
Surface Ponding at CBMH02	23.40
Surface Ponding at CBMH-01A	7.45
Sewer pipe storage	8.53
Structure storage	9.91
ADS Chamber storage	20.11
Total	**69.40**

Stormwater runoff from 851 Richmond Road is conveyed at a fixed release rate and does not require additional quantity control measures. The existing 525 mm diameter storm sewer is proposed to be re-routed through the underground parking garage of the proposed Market Building, ultimately discharging to the community garden ponds at the existing outlet location and elevation. The preferred construction approach is to install the new re-routed 525 mm storm sewer in parallel with the existing sewer while maintaining the existing system in service, with all required tie-ins completed during dry weather conditions to minimize service disruptions and construction-related risks. Runoff will then continue to be conveyed to the designated NCC outlet through the existing culvert system. Refer to drawings C401 and C601 for servicing and stormwater storage details, included in ***Appendix G***.

8 STORMWATER MANAGEMENT

8.1 Existing Stormwater Infrastructure

The subject property lies within the Ottawa River West sub-watershed. There is an existing private 375-450mm Ø storm sewer located within 30 Cleary Avenue. The private storm sewer is received by a 1500mm Ø municipal storm sewer.

Under pre-development conditions, stormwater runoff from the subject site generally drains as uncontrolled overland flow in a northerly direction toward adjacent NCC lands, while the southern portion of the site drains to the existing Cleary Avenue storm sewer system. A key design objective is to maintain these historic drainage patterns as closely as possible while accommodating the proposed development. Refer to ***Appendix A*** for topographical survey showing existing contours and grades.

There is currently a stormwater system in place for the pre-school building in the south corner of the property as well as a 525mm Ø storm sewer used to convey flows from offsite from the development located at 851 Richmond Road.

Additionally, runoff from the rear yards of properties fronting Aylen has been considered as an off-site watershed and accounted for in the detailed storm water design. Runoff from 851 Richmond Rd will be rerouted though the proposed building's underground parking garage and outlet in the community gardens at the existing outlet. Stormwater from the pre-school catchment is stored overland in the parking lot via surface ponding in existing conditions. Storm water storage re-design has been discussed further in the report. Stormwater details for Pre-school and 851 Richmon Rd. is included in ***Appendix I***.

8.2 Design Criteria

The stormwater management criteria for this development are based on the consultation with City of Ottawa and NCC officials, as per the City's 'Ottawa Design Guidelines -Sewer', Second Edition, document no. SDG002, October 2012, City of Ottawa, including technical bulletins: ISDTB-2014-01, PIEDTB-2016-01, ISTB 2018-01, ISTB-2018-04, ISTB-2019-02. The design criteria for runoff directed toward the NCC outlet is as per the NCC Stormwater Management Manual and the Pinecrest Creek/Westboro Stormwater Management Guidelines.

8.3 Water Quantity

8.3.1 Water Quantity- NCC Outlet

Based on consultation with NCC- correspondence included in ***Appendix H***, NCC SWM Manual and the Pinecrest Creek/Westboro Stormwater Management Guidelines, the following stormwater management requirements were identified and fulfilled for the subject site:

- Meet an allowable release rate based on a Rational Method with a maximum allowed Coefficient of 0.5, with a calculated time of concentration of a minimum of 10 minutes.
- Match the 100-yr and 5-yr post-development peak flow rate to their respective pre-development peak flow rate.
- A minimum on-site retention of the 10 mm design storm.

A designated NCC outlet has been identified at the north end of the property, which currently receives stormwater runoff from both the subject site and adjacent properties. The runoff is conveyed through this outlet and ultimately discharges into the Ottawa River via an existing swale located on NCC-owned forested land, followed by a culvert crossing beneath the Kichi Zibi Mikan Parkway.

The swale has a minimal slope, which promotes infiltration, and the existing culvert serves as a recognized outlet discharging to the Ottawa River. A site visit conducted in May 2025 confirmed that the culvert was largely dry at the time of inspection. Photographic documentation of the existing swale and culvert is provided in ***Appendix I***.

8.3.2 Water Quantity- Cleary Avenue

Based on consultation with the City on March 10, 2025, the following stormwater management requirements were identified and fulfilled for the subject site:

- Stormwater re-design is not required for areas of the site where high existing runoff coefficients are maintained and only re-grading is proposed.
- For areas where there is an increase in impervious surface, the following design criterion shall be applied to account for the rise in runoff coefficient:
- The 100-year post-development peak flow rate must be controlled to match the 5-year pre-development peak flow rate.

8.4 Water Quality

Based on the design guidelines, the following stormwater management requirement was fulfilled for the subject site:

- Provide enhanced level of treatment, 80% minimum Total Suspended Solid (TSS) removal.

8.5 Method of Analysis

The Modified Rational Method has been used to calculate the runoff rate from the site to quantify the storage required for quantity control of the development. Refer to ***Appendix F*** for storage calculations.

8.6 Proposed Stormwater Quality Controls

An enhanced protection level of 80% total suspended solids (TSS) removal criterion has been achieved for this project. An oil/grit separator **Stormceptor EF04** (or approved equivalent) is proposed and will be located downstream of the cistern within the parking garage. Refer to ***Appendix F*** for the selection, the type, and for more information on the treatment unit.

8.7 Proposed Stormwater Quantity Controls

8.7.1 Stormwater Quantity Controls- NCC Outlet

The majority of the proposed development is intended to outlet to existing outlet at NCC lands. The proposed stormwater management quantity control for this development will be accomplished using roof drains with controls, and a proposed cistern in the underground garage that will pump at a specified constant release rate. The required stormwater quantity storage on-site will be achieved via rooftop ponding and cistern storage.

The 5-year allowable release rate from the site was calculated to be **64.64 L/s** with the time of concentration of 10 minutes and a run-off co-efficient value of **0.50,** and these values were calculated based on the existing catchment ECA-01B, 02A,03A & 04A (0.446 ha) draining towards the NCC outlet. A small landscape area westward of the existing edge of the pavement and the existing community gardens will remain as-is. These catchments receive off-site stormwater, Alyne Ave rear yards and 851 Richmond Rd, and the stormwater will consistently flow to the NCC

outlet, mimicking pre-development conditions. As these areas are not subject to site grading or infrastructure changes, it has been excluded from stormwater runoff calculations. The release rates provided will be the maximum rates to which the entire site will be controlled during the major storm events. Refer to ***Appendix F*** for calculations.

Two (2) proposed 200mm Ø free-flowing storm sewer services are proposed at the north-east face of the building, downstream of the cistern and OGS, to outlet the captured flows from the cistern and roof outlet. The stormwater will eventually outlet to the existing outlet at the north of the property via a proposed 300mm Ø culvert. The proposed servicing layout and connection points are shown on drawing C401 in Appendix G, and detailed calculations can be found in Appendix F.

The site has been analyzed, and eleven (11) post-development catchments have been allocated to drain to NCC outlet.

Catchment CA-01A (0.075ha) consists of a landscaping area along the west P/L at the rear of the building. Stormwater from this catchment will flow through the existing swale uncontrolled to the NCC lands. Refer to grading plan C301 and servicing plan C401 in Appendix G for reference.

Catchment CA-02A, 02B and 02C (0.078ha) consists of the proposed Market building's envelope, will be captured via roof drains with controls and stored on rooftop.

Catchment CA-02D (0.022ha) consists of a section of the proposed Market building's envelope at Level 5, which will be captured via roof drains and drained to the underground cistern via building internal plumbing.

Catchment CA-03A- 0.3B (0.100ha) consists of the proposed OAHS building's envelope, will be captured via roof drains with controls and stored on rooftop.

Catchment CA-04 (0.032ha) consists of a landscaping and paver area in front of the OAHS Building. The stormwater from this catchment will drain overland to the existing garden pond and will eventually flow out to the NCC outlet.

Catchment CA-05A (0.116ha) consists mainly of the unit pavers area in front of the Market building and the area in between the two proposed buildings. Run-off will be collected via two (2) catch-basins and will be directed to the underground cistern through the building's internal plumbing.

Catchment CA-05B (0.027ha) consists of landscaping and a section of the paver area in front of the Market Building. The stormwater from this catchment will drain overland to the existing garden pond and eventually flow out to the NCC outlet.

Catchment CA-08 (0.013ha) consists of the ramp leading to the underground garage. Runoff will be collected via a trench drain at the end of the ramp and the captured flows will be directed to the underground cistern through the building's mechanical system.

For the storm events greater than the maximum HGL, a major overland flow route was identified; the grading was designed to direct major storm events away from the building and spill-out to the existing garden land in front of the OAHS building.

To achieve the allowable post-development stormwater release rate, the proposed development will utilize a combination of rooftop ponding and cistern storage using the specified release rates determined in this analysis.

Table 7 below summarizes post-development drainage areas. Refer to ***Appendix F*** for calculations

Table 7: ***Drainage Areas***

Drainage Area Name	Area (ha)	Weighted Runoff Coefficient	100 Year Weighted Runoff Coefficient (25% increase)
CA-01A (UNCONTROLLED)	0.075	0.39	0.47
CA-02A (ROOF- CONTROLLED)	0.046	0.90	1.00
CA-02B (ROOF- CONTROLLED)	0.014	0.90	1.00
CA-02C (ROOF-CONTROLLED)	0.018	0.90	1.00
CA-02D (CONTROLLED)	0.022	0.90	1.00
CA-03A (ROOF-CONTROLLED)	0.024	0.90	1.00
CA-03B (ROOF-CONTROLLED)	0.076	0.90	1.00
CA-04 (UN-CONTROLLED)	0.032	0.48	0.61
CA-05A (CONTROLLED)	0.116	0.85	1.00
CA-05B (CONTROLLED)	0.027	0.35	0.44
CA-08 (CONTROLLED)	0.013	0.90	1.00

With the total area of **0.446 Ha** draining to the NCC outlet in pre-development conditions, an allowable release rate of **64.64 L/s** was determined for 5-yr storm and **110.78 L/s** for 100-yr storm events. A total of 19 roof drains have been provided, which will drain at a total release rate of 18.05L/s, and the remainder of the controlled catchments will drain at a controlled release rate of 13.00 L/s was determined. With the implementation of flow control within the controlled watershed, it is ensured that the post-development release rate will not exceed the calculated allowable release rate.

The building's storm service conveys flows from;

1. The proposed cistern pumped at a specific release rate;
2. Roof drain outlet at a maximum release rate;

Table 8 below summarizes the release rates and storage volumes required to meet the allowable release rate for 100-year flow rates.

Table 8: *Stormwater Release Rate & Storage Volume Summary (100 Year)*

Catchment	Total Drainage Area (ha)	100-year Release Rate (L/s)	100-Year Required Storage (m^3)	Total Available Storage (m^3)
CA-02A, 02B &02C (Roof-top storage)	0.078	7.60	23.28	40.60
CA-03A, &03B (Roof-top storage)	0.100	10.45	27.33	54.18
CA-02D, 05A &08 (Cistern storage)	0.151	13.00	60.85	80.00
CA- 01A, 04 & 05B(Uncontrolled)	0.134	33.59	N/A	N/A
Total	**0.461**	**64.64**	**111.46**	**174.78**

To attenuate flows to the controlled release rate of 7.60 L/s for CA-02A, 02B & 02-C, it is calculated that a total of 23.28m3 of storage will be required for a 100-year storm event and a total of 40.60m^3 of rooftop storage has been proposed. Watts Roof Drain - ¼ Exposed Weir Opening (or approved equivalent) is proposed to provide the required controlled release rate of 0.95 L/s for each roof drain at a maximum flow depth of 0.15m. For the storm events greater than 100-yr, scuppers have been provided along the building, which will convey overflow from the roof to the adjacent landscape area.

To attenuate flows to the controlled release rate of 10.45 L/s for CA-03A & 03-B, it is calculated that a total of 27.33m3 of storage will be required for a 100-year storm event and a total of 54.18m^3 of rooftop storage has been proposed. Watts Roof Drain- ¼ Exposed Weir Opening (or approved equivalent) is proposed to provide the required controlled release rate of 0.95 L/s for each roof drain at a maximum flow depth of 0.15m. For the storm events greater than 100-yr, scuppers have been provided along the building, which will convey overflow from the roof to the adjacent landscape area. Refer to ***Appendix F*** for additional info on Watts Roof Drain. A detailed Roof Drain plan will be provided in future submission.

For CA-02D, 05A & 08, a controlled release rate of 13.00L/s is determined, and it is calculated that a total of 60.85m3 of storage will be required for a 100-year storm event. An average 50% of the controlled release rate (6.5 L/s) is considered for storage calculations. The required storage is provided on-site via u/g cistern which provides 80.00m^3 of storage. The proposed catch-basin CB102 will serve as an emergency spillover point. A detailed Cistern schematic will be provided in future submission.

8.7.1.1 NCC Outlet- Volume control

To satisfy the volume control requirement for the subject site, a minimum on-site retention of the 10mm design storm is mandated in accordance with the Pinecrest Creek/Westboro Stormwater Management Guidelines. This translates to a required storage volume of 47.05 m³.

The on-site volume retention will be achieved through ACO Stormbrixx (or approved equivalent) system proposed at the North of the site in front of the OAHS building. The proposed system will receive flow from roof drain and cistern outlet at a specific release rate and will outlet to the proposed culvert via a storm manhole. The system is proposed below the inlet and outlet pipes, and the bottom of system would be 0.8m below the inlet/ outlet pipes, thereby establishing a permanent pool that facilitates infiltration into the underlying soil. Once the stormwater exceeds the spillover elevation, excess flow will discharge into the outlet pipe. The system will provide a total storage of 52.65 m³. As per Geotechnical report, no groundwater was encountered in this area and hence this provides opportunity for infiltration. For further details on pond retention design, refer to Drawing C601 in ***Appendix G.***

Additional retention is provided by permeable pavers across the entire development, retention on proposed building's rooftop, and infiltration within the landscaped area. **Table 9** below summarizes the total retention volume.

Table 9: ***Stormwater Volume Retention Summary***

Elements	Total Drainage Area (m^2)	Depression Storage (mm)	Retention (m^3)
Permeable Pavers	750	3.00	2.25
Landscape area	2000	4.67	9.34
Building Rooftop	1000	1.57	1.57
Landscape area b/w 2 building	80	5.00	4.00
ACO Stormbrixx System			52.65
Total			**69.81**

8.7.2 Stormwater Quantity Controls- Cleary Outlet

The portion of the proposed development draining toward the Cleary Avenue storm sewer is limited to minor regrading and surface improvements. As discussed with the City, due to the unchanged nature of stormwater flow in this area, where the runoff coefficient remains consistent, stormwater quantity control measures are not required for the Cleary Avenue outlet. A small

portion of the asphalt parking area in front of the Church building will be expanded to accommodate a better traffic route, resulting in a minor increase in impervious surface. However, this increase is offset by eliminating a minor portion of the existing driveway/ parking lot drainage to the Cleary Avenue storm sewer. This affected portion of the existing asphalt driveway/ parking will be replaced with building footprint and unit pavers at the southern section of the proposed development, both of which will redirect drainage toward the NCC outlet. The small driveway section located east of the pre-school building currently drains toward Cleary Avenue via overland flow and will continue to do so following the proposed regrading.

9 EROSION AND SEDIMENT CONTROL

If this development proceeds, sediment and erosion control measures will be implemented before, during, and after construction of the project. Typical control measures such as silt fences and silt sacks shall be installed and maintained throughout the construction period. Mud mats will be provided at all primary site access points to minimize the tracking of sediment onto adjacent roadways.

Additional erosion and sediment control measures, including straw bale barriers and temporary check dams, shall be installed where required to intercept runoff, reduce flow velocities, promote sediment settlement, and protect downstream drainage systems and receiving areas.

This works is to be inline with the most recent OPSD standards.

10 GEOTECHNICAL SITE CONSIDERATIONS

A geotechnical investigation has been done onsite by CAP. The final report was produced on November 7, 2023. A total of ten (10) borehole were drilled, seven (7) of the boreholes are located under the proposed buildings.

The following conclusions highlight data that was determined during the geotechnical investigation:

- The bedrock is located between 0.86 m to 1.93 m from the surface;
- The majority of the soil found between the bedrock and the surface grade is glacial till;
- The groundwater elevation was located at approximately 3.4 meter below surface at the South of the site;
- The existing soils have a low potential for corrosion of buried ferrous elements.

Considering that the proposed underground parking will be built on the bedrock and close to the groundwater level, the investigation report recommends precautionary drainage under the slab. Additional details are summarized in the Geotechnical report submitted with this application.

11 CONCLUSION

This Stormwater Management and Servicing Report for the development proposed at 30 Cleary Ave presents the rationale and details for the servicing requirements for the subject property.

In accordance with the report objectives, the servicing requirements for the development are summarized below:

- **Water**:
  - The proposed development is intended to be serviced via 250mm Ø dual connection.
  - One of the tie-in connections will be to the 250mm Ø PVC Watermain located in Cleary Avenue. The second connection will be to the 200mm Ø PVC Watermain located within Richmond Rd via proposed water service within Cleary Ave right-of-way.
  - The anticipated water demands for the site are **1.26 L/s** (average daily), **4.07 L/s** (maximum daily), and **6.08 L/s** (maximum hourly).
  - Boundary conditions were received and pressures in all scenarios meet the required pressure range.
  - The minimum required fire flow was calculated at **10,000 L/min** using the FUS method.

- **Sanitary**:
  - The anticipated sanitary sewer flows are **4.48 L/s** as a result of the proposed residential population, and a small portion of infiltration.
  - It is intended to service the proposed development via a 200mm Ø sanitary service lateral to be connected to the existing 250mm Ø sanitary sewer via existing Sanitary MH within the Cleary Avenue ROW.

- **Stormwater**:
  - Site stormwater runoff is divided in two outlets: Cleary Ave and NCC lands.
  - As stormwater flow and runoff coefficients remain unchanged in the area draining to Cleary Ave, no quantity control measures have been implemented at Cleary Avenue outlet.
  - For NCC outlet, Post-development peak flows for the 100-yr and 5-yr storm events will be equal to or less than the pre-development peak flows.
  - The calculated pre-development runoff release rate for the NCC outlet is **64.64L/s** for 5-yr storm events**.**
  - Stormwater quantity control objectives will be met via rooftop ponding and cistern storage. The proposed stormwater management design will provide on-site storage volume of **40.60m^3 and 54.18m^3** within the roof top and **80.00m^3** within the underground cistern storage.
  - Stormwater volume retention will be provided via ACO Stormbrixx (or approved equivalent) system, which will provide a volume of 52.65 m^3
  - Off-site runoff from neighboring off-site properties remains as- is, and no stormwater quantity control measures have been implemented for this external drainage.
  - Quantity control measures have been revised for the pre-school building stormwater management system.

- Stormwater quantity control objectives for the pre-school building will be met via surface ponding and u/g stormwater storage chamber, which will provide a total storage vol of **69.40m³**.
- The stormwater quality control objectives will be met via **Stormceptor EF04** (or approved equivalent) oil and grit separator, proposed downstream of cistern outlet within the parking garage.

12 Report Conditions and Limitations

Shall the concept plan change in relation to the number of units, building footprint, or impervious area of the site, the conclusions above would no longer be appropriate. During the detailed design stage of this development, the storm, sanitary and water servicing details will be further defined and confirmed.

Prepared by:
LRL Associates Ltd.



Clayton Powers, P.Eng
Civil Engineer

Virginia Johnson, P. Eng.
Civil Engineer

APPENDIX A

Site Topographical Survey

Stantec

Stantec Geomatics Ltd.
300-1331 Clyde Avenue
Ottawa ON
Tel. 613.722.4420
www.stantec.com

© Copyright 2024 Stantec Geomatics Ltd. The reproduction, alteration or use of this REPORT in whole or in part without the express permission of Stantec Geomatics Ltd. is STRICTLY PROHIBITED.

TOPOGRAPHIC SURVEY OF

LOTS 8, 9 & 10 & PART OF LOTS 6 & 7 (WEST CLYBOURNE AVENUE) PART OF LOTS 6 & 7 (EAST CLYBOURNE LOTS), PART OF LOT 6 (WEST ARDMORE AVENUE), PART OF CLYBOURNE AVENUE (CLOSED BY BY-LAW CR573286), PART OF GORMAN STREET (CLOSED BY BY-LAW CR573286) REGISTERED PLAN NO.236 AND PART OF LOTS 26 & 27 CONCESSION 1 (OTTAWA FRONT)

CITY OF OTTAWA

Stantec Geomatics Ltd.
ONTARIO LAND SURVEYORS

Scale 1:250
5 0 5 10 15 METRES

METRIC CONVERSION
DISTANCES AND COORDINATES SHOWN ON THIS PLAN ARE IN METRES AND CAN BE CONVERTED TO FEET BY DIVIDING BY 0.3048

BEARING NOTE
BEARINGS ARE GRID, DERIVED FROM THE CAN-NET VRS NETWORK OBSERVATIONS ON NCC HORIZONTAL CONTROL MONUMENTS 19773035 AND 19680191, CENTRAL MERIDIAN, 76°30' WEST LONGITUDE MTM ZONE 9. NAD83 (CSRS) (2010.0).

19773035 N:5006060.00 E:324888.04
19680191 N:5033563.88 E:388064.92

ELEVATION NOTE
ELEVATIONS SHOWN HEREON ARE GEODETIC (CGVD-1928:1978) AND ARE DERIVED FROM THE CAN-NET VRS NETWORK MONUMENT: OTTAWA ELEVATION=95.230.

LEGEND

■	DENOTES	FOUND MONUMENTS
□	"	SET MONUMENTS
IB	"	IRON BAR
IBø	"	ROUND IRON BAR
SIB	"	STANDARD IRON BAR
SSIB	"	SHORT STANDARD IRON BAR
CC	"	CUT CROSS
CP	"	CONCRETE PIN
WIT	"	WITNESS
PIN	"	PROPERTY IDENTIFICATION NUMBER
M/MEAS	"	MEASURED
PROP	"	PROPORTIONED
OU	"	ORIGIN UNKNOWN
SG	"	STANTEC GEOMATICS LTD.
P1	"	PLAN 5R-6767
P2	"	PLAN BY 857, DATED NOV.14, 2007
P3	"	PLAN BY AOV, DATED DEC.17, 2014
P4	"	PLAN 4R-28689
P5	"	PLAN 4R-34953
ACU	"	AIR CONDITIONING UNIT
AN	"	ANCHOR
AP	"	AIR PUMP
ANT	"	ANTENNA
BH	"	BOREHOLE
BIB	"	HOSE BIB
BKR	"	BIKE RACK
BOL	"	BOLLARD
BOUL	"	BOULDER
CB	"	CATCH BASIN
CBMH	"	CB MANHOLE
CSV	"	CURB STOP VALVE
DRN	"	DRAIN
EPOST	"	ELECTRICAL OUTLET
FP	"	FLAG POLE
FL	"	FLOOD LIGHT
FTF	"	FUEL TANK FILLER CAP
GC	"	GARBAGE CAN
GFL	"	PIPE FLANGE (GAS)
GFP	"	GAS FUEL PUMP
GP	"	POLE GUYWIRE
GSR	"	GAS SERVICE REGULATOR
GV	"	GAS VALVE
HIC	"	HICKENBOTTOM
HLS	"	HYDRO LIGHT STANDARD
HM	"	HYDRO METER
HTN	"	HYDRO TRANSFORMER
HW	"	HAND WELL
HYD	"	FIRE HYDRANT
JBX	"	JUNCTION BOX
LS	"	LIGHT STANDARD
MB	"	MAILBOX
MP	"	MONITORING PIN
MH	"	MAINTENANCE HOLE UNIDENTIFIED
MHB	"	MAINTENANCE HOLE BELL
MHF	"	MAINTENANCE HOLE FIBRE OPTIC
MHH	"	MAINTENANCE HOLE HYDRO
MHSAN	"	MAINTENANCE HOLE SANITARY
MHSTM	"	MAINTENANCE HOLE STORM
MHT	"	MAINTENANCE HOLE TRAFFIC
MW	"	MONITORING WELL
NPB	"	NEWS PAPER BOX
OLS	"	LIGHT STANDARD ORNAMENTAL
OW	"	OBSERVATION WELL
PKM	"	PARKING METER
PLBX	"	PULL BOX
PLR	"	PILLAR
SCP	"	SUMP/CATCH PIT
SCV	"	SPRINKLER CONTROL VALVE
SH	"	SPRINKLER HEAD
SIA	"	SIAMESE CONNECTION
SN	"	SIGN
TBL	"	TABLE
TB BELL	"	TERMINAL BOX - BELL
TB CATV	"	TERMINAL BOX - CABLE
TCB	"	TRAFFIC CONTROL BOX
UMB	"	MARKER BELL UNDERGROUND
UMC	"	MARKER CABLE UNDERGROUND
UMG	"	MARKER GAS UNDERGROUND
UMO	"	MARKER OIL UNDERGROUND
UP	"	UTILITY POLE
VB	"	VALVE BOX
VC	"	VALVE CHAMBER
WV	"	WATER VALVE
	"	TREE STUMP
	"	TREE CONIFEROUS (D.B.H. SHOWN)
	"	TREE DECIDUOUS (D.B.H. SHOWN)
	"	TREE DRIP LINE
T	"	UNDERGROUND TELEPHONE
P	"	UNDERGROUND HYDRO
WTM	"	WATERMAIN
G	"	GASMAIN
STM	"	STORM SEWER
FOTS	"	UNDERGROUND FIBRE OPTIC

SURVEYOR'S CERTIFICATE

I CERTIFY THAT :

1. THIS SURVEY AND PLAN ARE CORRECT AND IN ACCORDANCE WITH THE SURVEYS ACT, THE SURVEYORS ACT AND THE LAND TITLES ACT AND THE REGULATIONS MADE UNDER THEM.
2. THE SURVEY WAS COMPLETED ON THE 9th DAY OF MAY, 2024.

DATE

R. G. BENNETT
ONTARIO LAND SURVEYOR

DRAWN: CT CHECKED: CK PM: CT FIELD: CA/AW PROJECT No.: 161614713-111

W:\active\161614713\topographical\drawing\161614713-111_d1_REV2.dwg

APPENDIX B

Architectural Site Plan

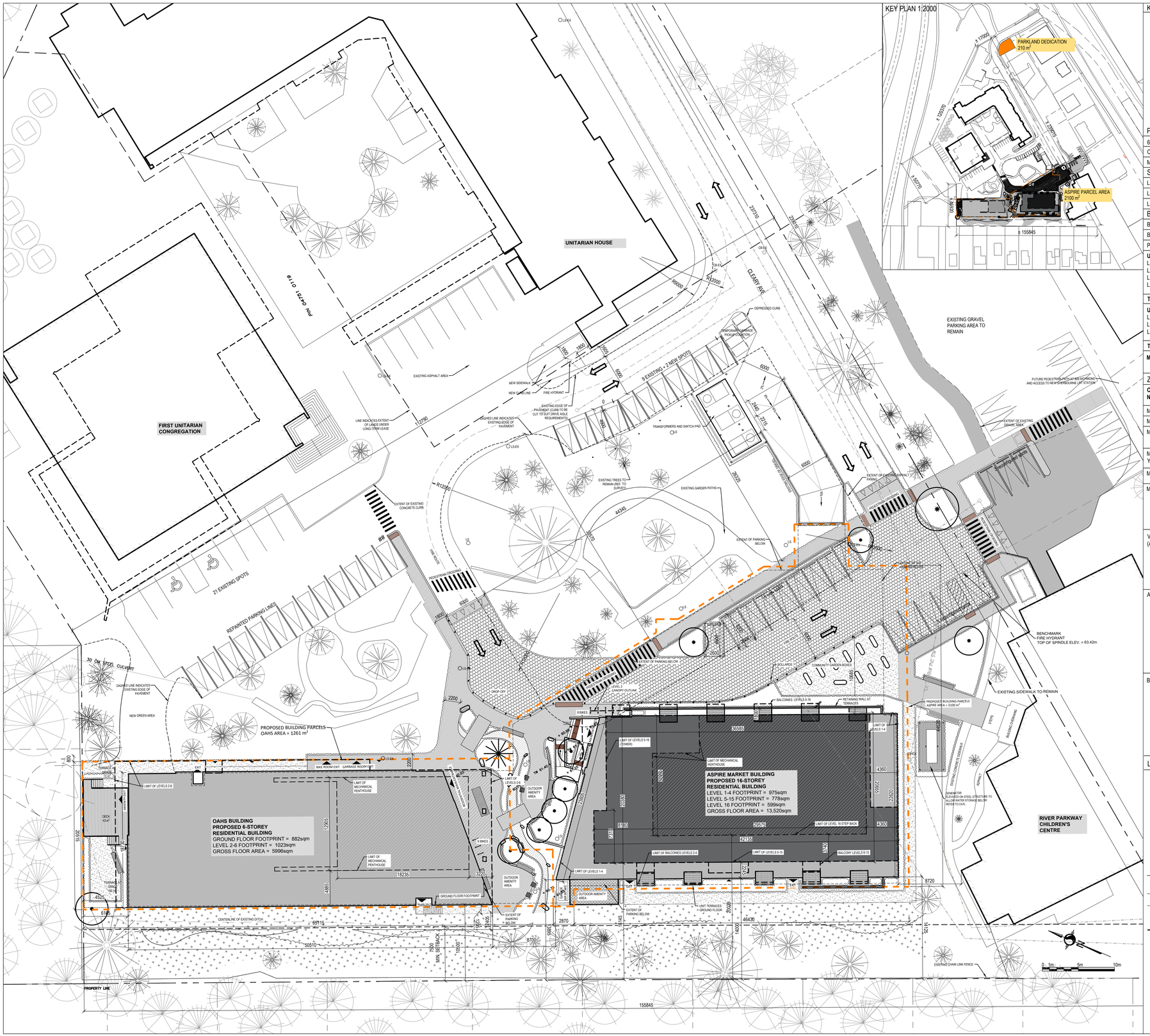

KEY PLAN



PROPERTY DESCRIPTION

6 & 16 STOREY RESIDENTIAL BUILDINGS

CITY OF OTTAWA PIN NUMBER	04751-0119
MUNICIPAL ADDRESS	30 Cleary ave

SITE INFORMATION

LOT AREA: 20,680 sqm

LOT FRONTAGE: 237.3m

LOT DEPTH: 112.8m

BUILDING INFORMATION

BUILDING AREA: MARKET BUILDING = 979sqm, OAHS Building= 875 sqm

BUILDING FLOOR AREA: MARKET BLDG=13520 sqm, OAHS BLDG = 5996 sqm, P1=2709sqm, P2=2112sqm

PROPOSED USE: APARTMENT DWELLINGS

UNIT BREAKDOWN - MARKET BUILDING:		UNIT MIX:
LEVEL 1:	9 UNITS	4x 1B, 2x 1B+D, 1x 2B, 2x 2B+D
LEVEL 2-4:	12 UNITS	1x STUDIO, 3x 1B, 2x 1B+D, 4x 2B, 2x 2B+D
LEVEL 5-15	10 UNITS	1x STUDIO, 3x 1B, 3x 1B+D, 2x 2B, 1x 3B
LEVEL 16	8 UNITS	6x 1B, 2x 2B
TOTAL	**163 UNITS**	

UNIT BREAKDOWN - OAHS BUILDING:		UNIT MIX:
LEVEL 1:	5 UNITS	4x 1B, 1 x 2B
LEVEL 2:	13 UNITS	6x 1B, 4x 1B+D, 2x 2B, 1x 3B
LEVEL 3-6:	12 UNITS	7x 1B, 2x 1B+D, 2x 2B, 1x 3B
TOTAL	**66 UNITS**	

MARKET & OAHS BUILDINGS TOTAL 229 UNITS

ZONING TABLE I1A[314]H(13.8)

CITY OF OTTAWA ZONING BY-LAW No. 2008-250	REQUIRED	PROPOSED
MINIMUM LOT AREA	400m²	TOTAL LOT AREA=20,680sqm
MINIMUM LOT WIDTH	15m	237.3m
MINIMUM FRONT YARD SETBACK	3m	22.7m
MINIMUM INTERIOR SIDE YARD SETBACK	7.5m	10.5m
MINIMUM REAR YARD SETBACK	Abutting R1, R2 or R3:7.5m Other cases: 4.5m	4.525m
MAXIMUM BUILDING HEIGHT	13.8m	MARKET BUILDING= 49.80m(WITHOUT PENTHOUSE) 53.80m(WITH PENTHOUSE) OAHS= 18.80m (WITHOUT PENTHOUSE) 22.8m (WITH PENTHOUSE)
VEHICLE PARKING REQUIREMENTS (AREA Z)	As per Bylaw 2024-381, for the 30 Cleary site, above grade parking spots required is 143.	Above grade parking provided for entire 30 Cleary site = 147 Underground spots provided = 96
AMENITY AREA REQUIREMENTS	6m² per dwelling unit, and 10% of the gross floor area of each rooming unit. Minimum 50% of the required total amenity area to be communal. MARKET= 6m² x 163 units= 978 sqm OAHS= 6m² x 66 units= 396 sqm	MARKET BUILDING= 978 sqm PRIVATE 624 sqm COMMUNAL 1113 sqm TOTAL OAHS BUILDING= 430 sqm (ALL COMMUNAL)
BICYCLE PARKING SPACES	0.5 per dwelling unit MARKET BUILDING = 82 REQU. OAHS = 33 REQU.	MARKET BUILDING: HORIZONTAL = 89 SPACES STACKED:58x2=116 SPACES EXTERIOR HORIZONTAL = 8 213 SPACES TOTAL OAHS: HORIZONTAL = 22 STACKED: 22x2= 44 SPACES EXTERIOR HORIZONTAL = 6 72 SPACES TOTAL

LEGEND

- STONE DUST REFER TO LANDSCAPE
- PAVERS REFER TO LANDSCAPE
- ASPHALT PAVING
- CONCRETE
- RIVERSTONE REFER TO LANDSCAPE
- EXISTING BUILDING ELEMENT TO BE REMOVED
- EXISTING FENCE
- NEW BOARD FENCE REFER TO LANDSCAPE
- LOT LINE
- SETBACK LINE
- DESIGNATED BUILDING ENTRANCE / EXIT
- FH FIRE HYDRANT. REFER TO CIVIL
- CB CATCH BASIN
- MH MANHOLE
- FD FLOOR DRAIN
- UP UTILITY POLE
- OHW OVERHEAD UTILITY WIRES
- L.S. LIGHT STANDARD
- DC DEPRESSED CURB
- NEW TREE
- EXISTING TREE (REFER TO LANDSCAPE DRAWINGS) INNER CIRCLE = TRUNK DIA. OUTER CIRCLE = ROOT WIDTH
- NEW PLANTING AREA (REFER TO LANDSCAPE DRAWINGS)
- 77.79 EXISTING GROUND ELEVATION [TO DETERMINE EXISTING AVERAGE GRADE]
- 78.84 NEW GROUND ELEVATION REFER TO CIVIL

NOTE: 'X'-E INDICATES EXISTING TO REMAIN

No.	Date	Émis pour / Object
01	09-11-2023	ISSUED FOR PRE-CONSULTATION
02	02-16-2024	PHASE 3 - PRE-APPLICATION
03	30-05-2024	Issued for Phase 3 Resubmission
04	27-02-2025	UPDATES FOR REVIEW
05	14-03-2025	UPDATES FOR REVIEW
06	27-03-2025	UPDATES FOR REVIEW
07	01-04-2025	PARCELS/PARKLAND DEDICATION
08	08-04-2025	REVIEW
09	22-04-2025	REVIEW
10	2025-05-01	REVIEW
11	2025-05-14	REVIEW
12	2025-05-16	SPC
-	---	---
-	---	---
-	---	---
-	---	---
-	---	---
-	---	---
-	---	---

Ingénieur / Engineer
(Mécanique & Électricité / Mechanical & Electrical)

Ingénieur / Engineer
(Structure / Structure)

Architecte/ Architect
(paysagiste / Landscape)

Ingénieur / Engineer
(Civil / Civil)

Client / Client

Architecte / Architect
fig. 1
3550, Saint-Antoine O.
Montréal QC H4C 1A9
T. 514 861-5122

fig. 2
252 Argyle Ave.
Ottawa ON K2P 1B9
T. 613 695-6122

Collectif d'architectes / Architects Collective
figurr
www.figurr.ca

Droit d'auteur / Copyright

Ce dessin est sujet au droit d'auteur. Il ne peut être reproduit pour quelques intentions ou usages que ce soit, il ne peut être utilisé uniquement avec l'apposition de la signature et de l'estampe originale.

This drawing is subject to copyright. It is not to be reproduced for any purpose or by any means, and may only be used if it bears an original stamp and signature.

Sceau / Seal

ONTARIO ASSOCIATION OF ARCHITECTS
ROBERTO CAMPOS
LICENCE
7401

Note:

L'entrepreneur doit vérifier toutes les dimensions et informations sur le site et aviser immédiatement l'architecte de toutes erreurs ou omissions.

Contractor shall verify all information and dimensions on site and immediately report any errors or omissions to the architect.

Projet / Project

THEIA-FIRST UNITARIAN

30 Cleary Avenue

Ottawa

Titre / Title

SITE PLAN

Dessiné par / Drawn by	No. projet / Project number	
ZK + RH	2314	
Vérifié par / Verified by	No. dessin / Drawing number	Révision / Revision
RC		0
Échelle / Scale		
1:250		
Date de création du dessin / Drawing creation date		
06/06/2023		A010

APPENDIX C

As-Built Road Profiles – Cleary Avenue

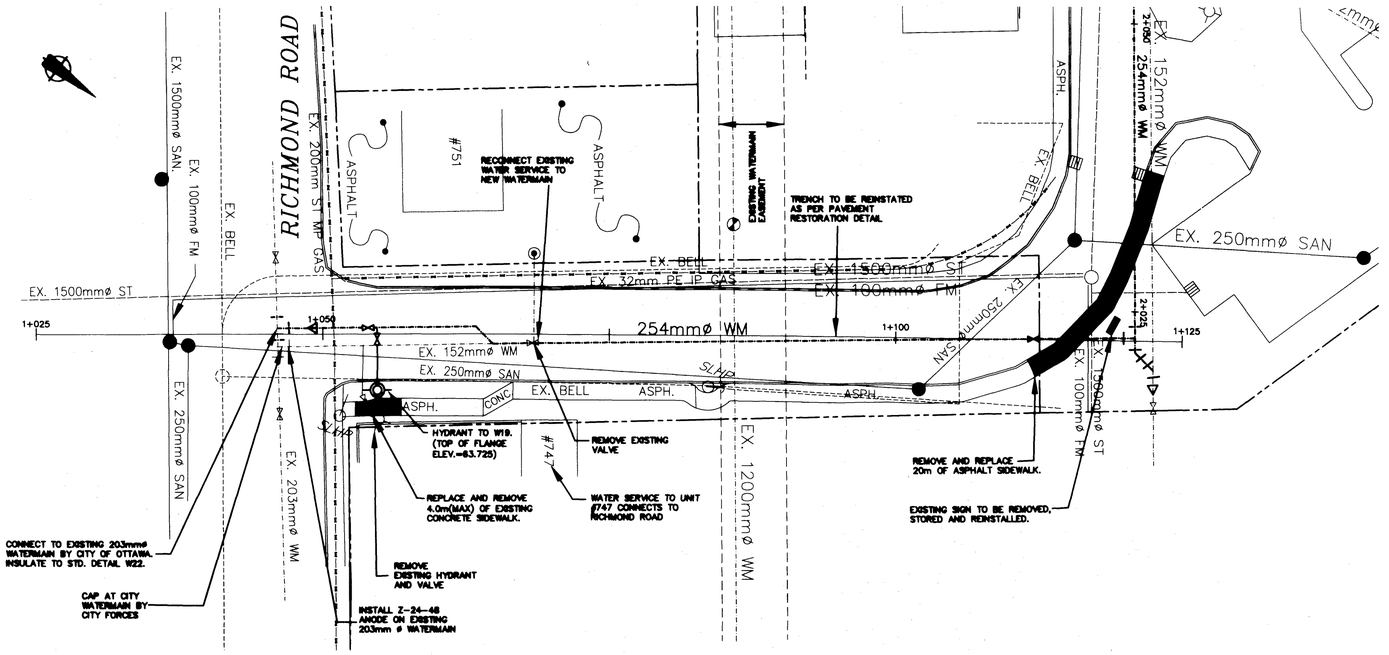

CLEARY AVENUE

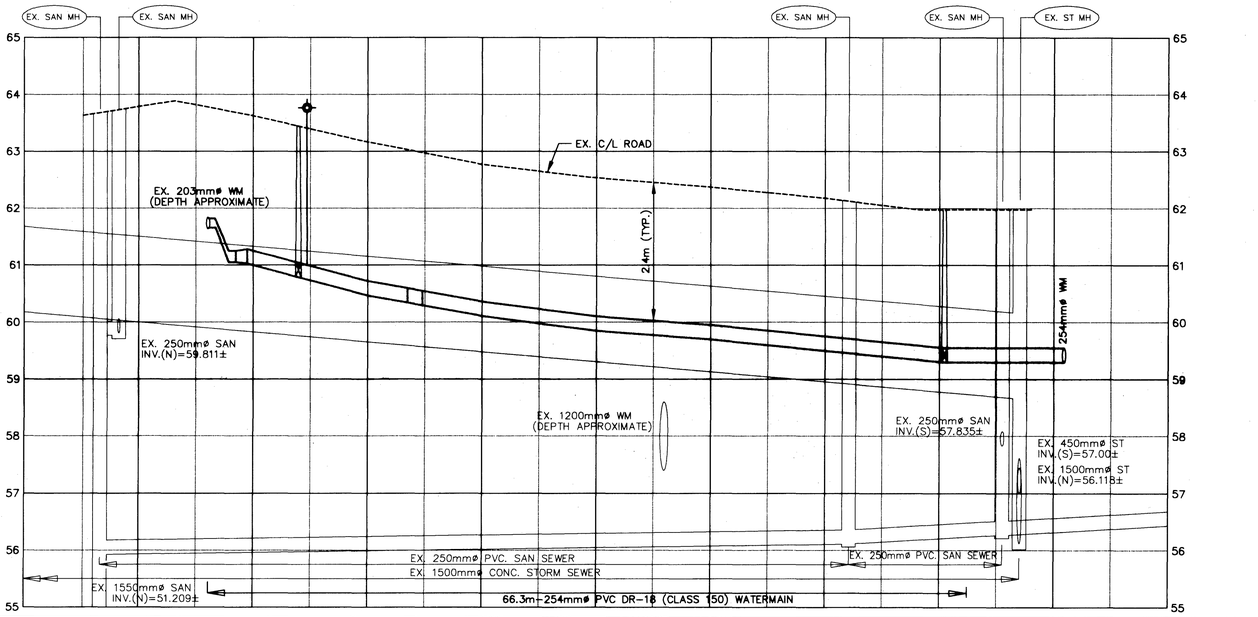

| | | |

TITLEBLOCK: 863.6mm x 558.8mm E/V 2019

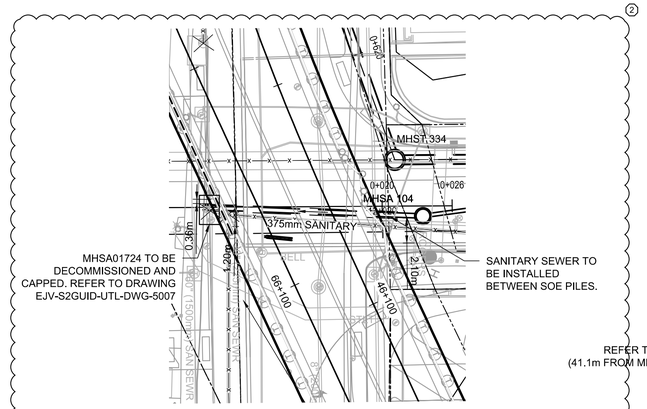

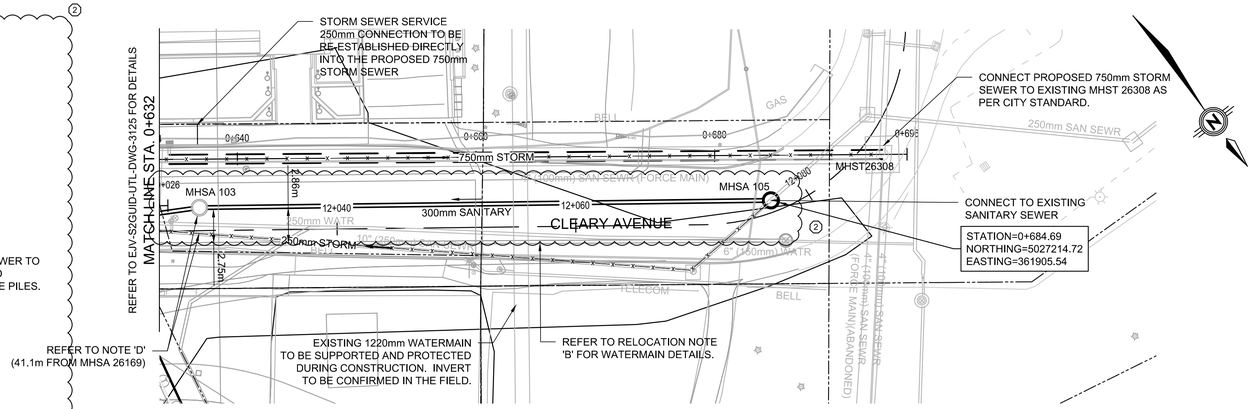

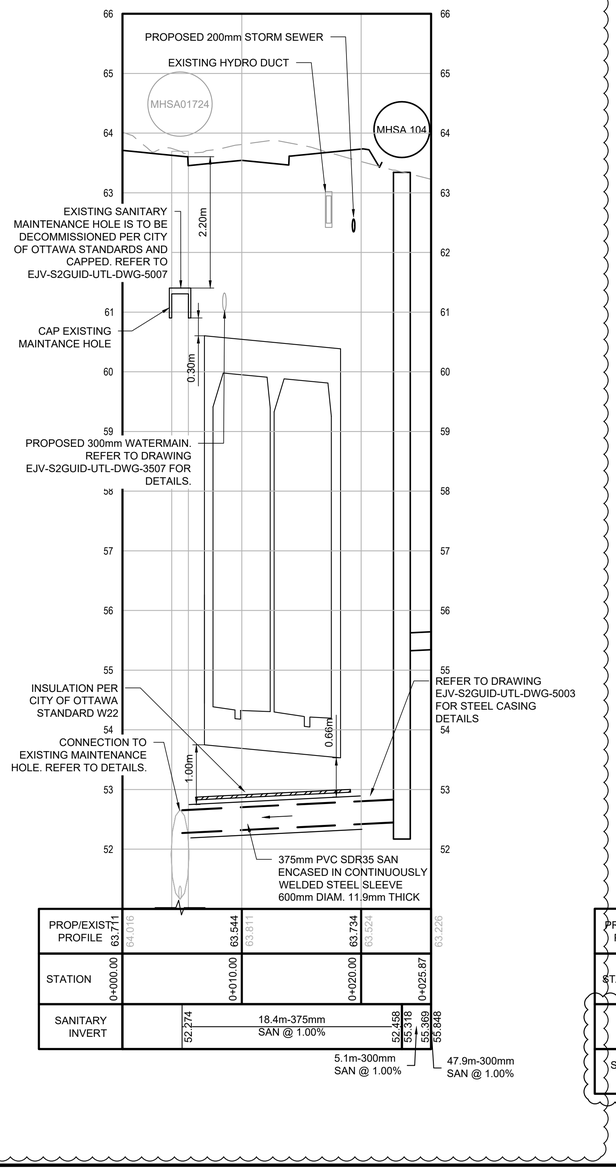

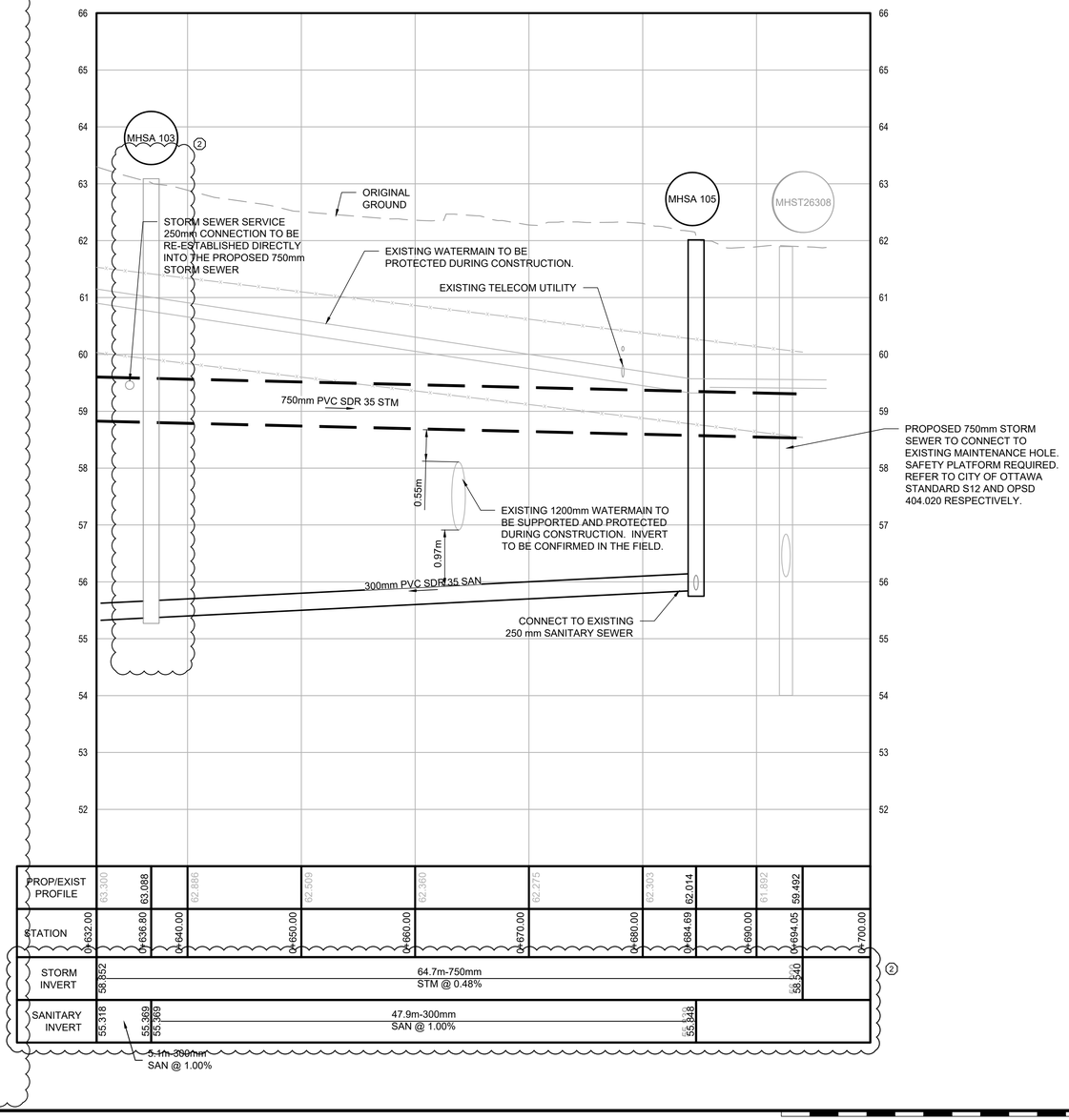

STAGE 2 ETAPE 2 — Confederation Line EAST / Confederation Line WEST

Ottawa

DRAWING NAME

UTILITY WEST EXPANSION
OVERALL DESIGN - PART A - iv
SEGMENT 2
② RICHMOND EAST OF WOODROFFE
300mm & 375mm SANITARY SEWER
CLEARY AVENUE (2/2)
EB. STA. 66+090

CONTRACT No. LRT19-1019

DESIGNED	CHECKED
C. MONSEBROTEN	G. DAL BELLO
DRAWN	SEALED
B. CHAO	G. DAL BELLO

DRAWING NUMBER
EJV-S2GUID-UTL-DWG-3126

PRIMARY SEAL
LICENSED PROFESSIONAL ENGINEER
G. E. DAL BELLO
100551229
Apr 11 2024
PROVINCE OF ONTARIO

ENGINEERING JV
EWC DESIGNERS

SECONDARY SEAL

SCALE
HORIZONTAL
1:250 22"x34" 1:500 11"x17"
0m 2.5 5 10 20
0.5 1 2 4
1:50 22"x34" 1:100 11"x17"

ASSET No. -

ASSET GROUP -

REV	DESCRIPTION	BY	DATE
0	ISSUED FOR CONSTRUCTION	GDB	2020-08-20
1	SIN-0048: STORM, SANITARY SEWER AND WATERMAIN AMENDMENT	GDB	2020-10-26
②	RE-ISSUED FOR CONSTRUCTION	GDB	2024-03-25

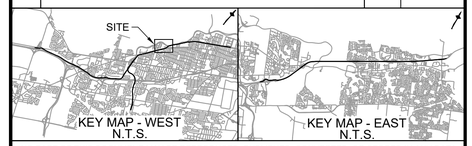

NO PART OF THIS DOCUMENT MAY BE REPRODUCED, PUBLISHED, CONVERTED, OR STORED IN ANY DATA RETRIEVAL SYSTEM, OR TRANSMITTED IN ANY FORM BY ANY MEANS (ELECTRONIC, MECHANICAL, PHOTOCOPYING, RECORDING, OR OTHERWISE) WITHOUT THE PROPER WRITTEN PERMISSION.

LAYOUT INFORMATION BASED ON 3 DEGREE MTM ZONE 9 NAD 83 ORIGINAL COORDINATE SYSTEM. COMBINED SCALE FACTOR 0.9999

MODIFICATIONS

REV	DESCRIPTION	DATE
2	EJV-KEV-FDC-1019 EWC-EJV-FDC-1249	2024-03-25

RELOCATION NOTES:

A) LOCAL STORM AND SANITARY SERVICE LOCATIONS TO BE VERIFIED BY CONTRACTOR PRIOR TO CONSTRUCTION. EXISTING STORM AND SANITARY SERVICES TO BE CONNECTED TO PROPOSED STORM AND SANITARY MAINS.
B) REFER TO ROADWAY/ DRAINAGE - RICHMOND ROAD (COMPLETE STREETS) INCL. BYRON LINEAR PARK FOR DETAILS ON PROPOSED GROUND ELEVATIONS AND FUTURE WATERMAIN RELOCATIONS.
C) PIPE CLASSES SHOWN ON DRAWINGS ARE MINIMUM REQUIREMENTS. CONTRACTOR'S PIPE SUPPLIER TO CONFIRM IF ADEQUATE FOR CONSTRUCTION METHODOLOGY AND INCREASE IF REQUIRED (WITH APPROVAL).
D) POTENTIAL SERVICE FOUND IN CCTV DATA TO BE REMOVED AND RECONNECTED TO PROPOSED SEWER.
E) CONTRACTOR TO CONFIRM MAXIMUM GROUTING TEMPERATURE AND PRESSURE AND ACCEPTABLE WITH PVC PIPE SUPPLIER PRIOR TO GROUTING. ②

SANITARY STRUCTURES

STRUCTURE	COVER	OPSD NO.	STATION	OFFSET	T/G ELEVATION	LOW/INV
MHSA 103 **	S24	701.010	0+636.8	4.1R	63.09	SE 55.37
MHSA 104 *	S24	701.011	0+631.7	4.7R	63.34	SE 52.46
MHSA 105 **	S24	701.010	0+684.7	3.8R	62.01	SE 55.85

* DROP STRUCTURE AND SAFETY PLATFORM REQUIRED. REFER TO OPSD 1003.010 AND OPSD 404.020 RESPECTIVELY. ②
** SAFETY PLATFORM REQUIRED. REFER TO OPSD 404.020

ROW LINES ARE APPROXIMATE AND BASED ON CITY PROVIDED PROPERTY REQUEST PLANS (PRP). ANY PROPOSED CONSTRUCTION WITHIN 1m OF A PROPERTY LIMIT REQUIRES THAT A LICENSED ONTARIO LAND SURVEYOR BE ENGAGED AS PER SCHEDULE 15-2 PART 1 ARTICLE 4.2.

2024-Apr-11 10:27:55 AM C:\pwworking\hi\victoria.teng@wsp.com\d0654111\EJV-S2GUID-UTL-DWG-3122THRU3139.dwg

TITLEBLOCK: 863.6mm x 558.8mm EJV 2019

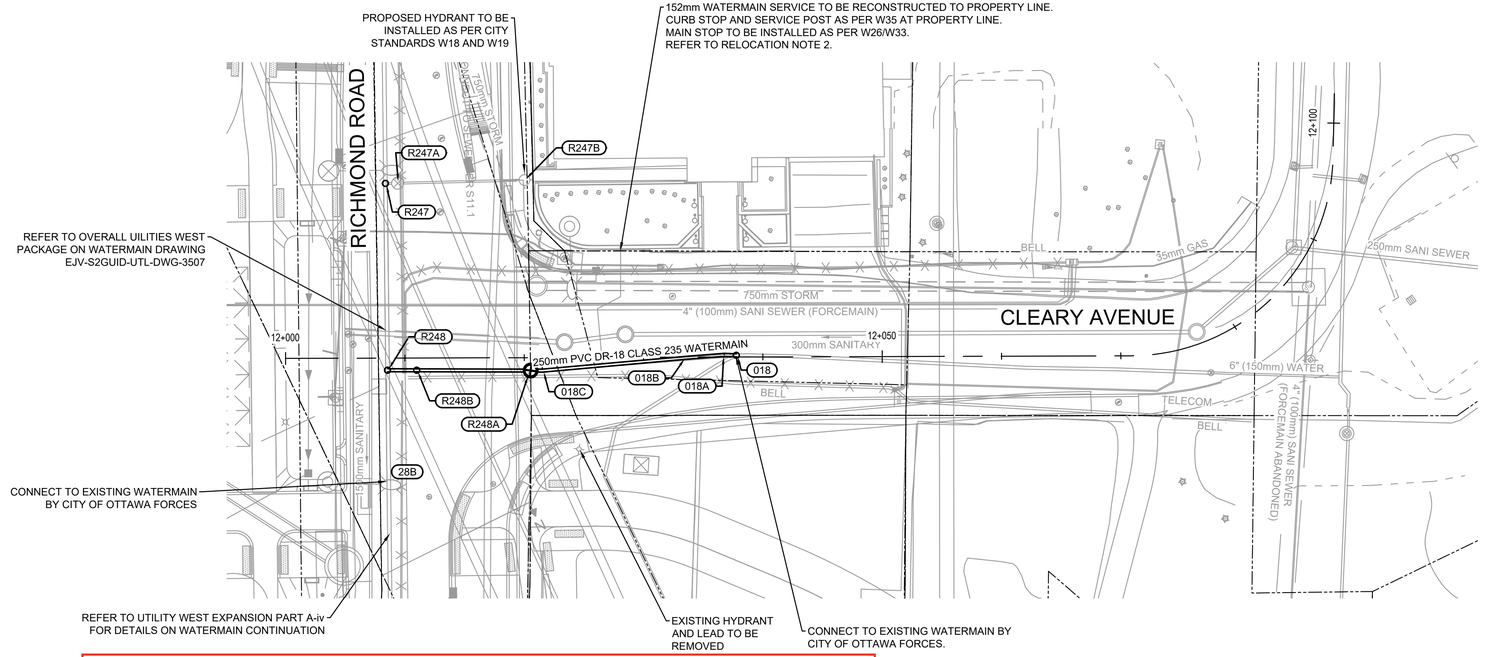

EWC-OTT-VARNTC-0283 - Variation Notice 0283 - Maintain Existing Watermain on Cleary Avenue

EJV-KEV-NDC-1800 - RRCS rev02

EJV-KEV-NDC-1809- VD - 1029 - existing watermain at Clearly Avenue

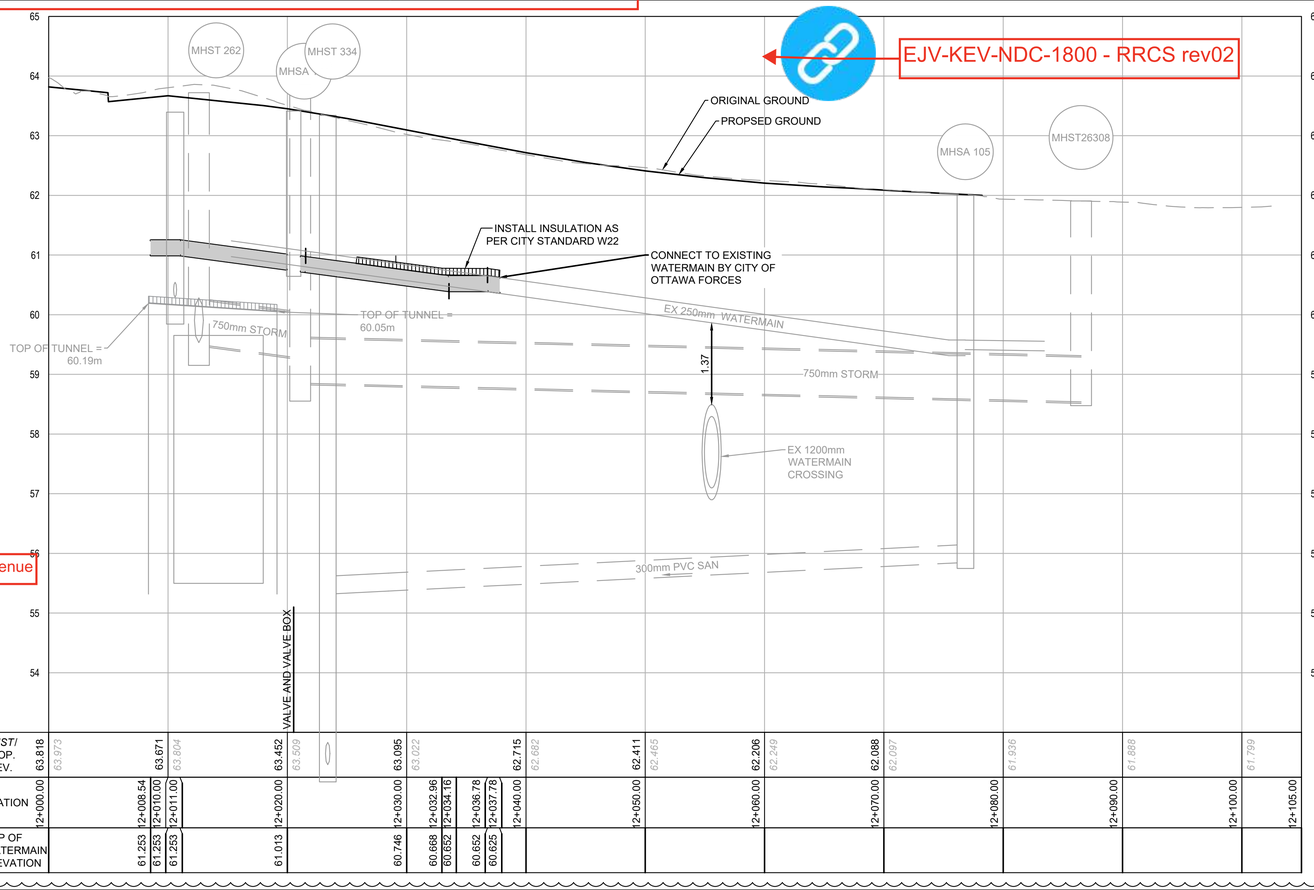

| | | |

APPENDIX D

Water and Fire Demand Calculations
Boundary Conditions

Water Supply Calculations

LRL File No.	230437
Date	September 21, 2026
Prepared by	Sarthak Vora
Location	30 Cleary Avenue, Ottawa, ON

Water Demand based on the City of Ottawa Design Guidelines-Water Distribution, 2010

Domestic Demand			
Unit Type	**Persons Per Unit**	**Number of Units**	**Population**
1 Bedroom Apartment	1.4	153	214.2
2 Bedroom Apartment	2.1	60	126.0
3 Bedroom Apartment	3.1	16	49.6
	Total	**229**	**389.8**

**Based on a daily demand of 280L/day per person as identified by Appendix 4-A of the Sewer design guidelines.*

Average Water Consumption Rate	280	L/c/d		
Average Day Demand	**109,144**	**L/d**	**1.26**	**L/s**
Maximum Day Factor	3.2		Table (3-3) MOE Peaking Factors	
Maximum Daily Demand	**351,868**	**L/d**	**4.07**	**L/s**
Peak Hour Factor	4.8		Table (3-3) MOE Peaking Factors	
Maximum Hour Demand	**525,108**	**L/d**	**6.08**	**L/s**
TOTAL DEMAND				
Average Day Demand	**109,144**	**L/d**	**1.26**	**L/s**
Maximum Daily Demand	**351,868**	**L/d**	**4.07**	**L/s**
Maximum Hour Demand	**525,108**	**L/d**	**6.08**	**L/s**

Fire Flow Calculations

LRL File No.	230437
Date	September 21, 2026
Method	Fire Underwriters Survey (FUS)
Prepared by	Sarthak Vora
Location	30 Cleary Avenue, Ottawa, ON.

OAHS Building

Step	Task	Term	Options	Multiplier	Choose:	Value	Unit	Fire Flow
Structural Framing Material								
1	Choose frame used for building	Coefficient C related to the type of construction	Wood Frame	1.5	Non-combustible construction	**0.8**		
			Ordinary Construction	1.0				
			Non-combustible construction	0.8				
			Fire resistive construction <2 hrs	0.7				
			Fire resistive construction >2 hrs	0.6				
Floor Space Area (A)								
2	Total area					**4,078**	m^2	
3	Obtain fire flow before reductions	Required fire flow *(rounded to nearest 1,000 L/min)*	Fire Flow = 220 x C x $A^{0.5}$				L/min	**12,000**
Reductions or surcharge due to factors affecting burning								
4	Choose combustibility of contents	Occupancy hazard reduction or surcharge	Non-combustible	-25%	Limited combustible	**-15%**	L/min	**10,200**
			Limited combustible	-15%				
			Combustible	0%				
			Free burning	15%				
			Rapid burning	25%				
5	Choose reduction for sprinklers	Sprinkler reduction	Full automatic sprinklers	-30%	True	**-30%**	L/min	**5,100**
			Water supply is standard for both the system and fire department hose lines	-10%	True	**-10%**		
			Fully supervised system	-10%	True	**-10%**		
6	Choose separation	Exposure distance between units	North side	>30m	0%		L/min	**9,180**
			West side	20.1 to 30m	10%			
			East side	20.1 to 30m	10%			
			South side	3.1 to 10m	20%	**40%**		
Net required fire flow								
7	Obtain fire flow, duration, and volume	Minimum required fire flow rate (rounded to nearest 1000)					L/min	**9,000**
		Minimum required fire flow rate					L/s	**150.0**
		Required duration of fire flow					hr	**2.0**

Fire Flow Calculations

LRL File No.	230437
Date	September 21, 2026
Method	Fire Underwriters Survey (FUS)
Prepared by	Sarthak Vora
Location	30 Cleary Avenue, Ottawa, ON.

Market Building

Step	Task	Term	Options	Multiplier	Choose:	Value	Unit	Fire Flow
Structural Framing Material								
1	Choose frame used for building	Coefficient C related to the type of construction	Wood Frame	1.5	Non-combustible construction	**0.8**		
			Ordinary Construction	1.0				
			Non-combustible construction	0.8				
			Fire resistive construction <2 hrs	0.7				
			Fire resistive construction >2 hrs	0.6				
Floor Space Area (A)								
2	Total area					**5,232**	m^2	
3	Obtain fire flow before reductions	Required fire flow *(rounded to nearest 1,000 L/min)*	Fire Flow = 220 x C x $A^{0.5}$				L/min	**13,000**
Reductions or surcharge due to factors affecting burning								
4	Choose combustibility of contents	Occupancy hazard reduction or surcharge	Non-combustible	-25%	Limited combustible	**-15%**	L/min	**11,050**
			Limited combustible	-15%				
			Combustible	0%				
			Free burning	15%				
			Rapid burning	25%				
5	Choose reduction for sprinklers	Sprinkler reduction	Full automatic sprinklers	-30%	True	**-30%**	L/min	**5,525**
			Water supply is standard for both the system and fire department hose lines	-10%	True	**-10%**		
			Fully supervised system	-10%	True	**-10%**		
6	Choose separation	Exposure distance between units	North side	3.1 to 10m	20%		L/min	**9,945**
			West side	>30m	0%			
			East side	>30m	0%			
			South side	3.1 to 10m	20%	**40%**		
Net required fire flow								
7	Obtain fire flow, duration, and volume	Minimum required fire flow rate (rounded to nearest 1000)					L/min	**10,000**
		Minimum required fire flow rate					L/s	**166.7**
		Required duration of fire flow					hr	**2.0**

Water System Calculations

LRL File No.	230437
Date	09-Sep-26
Prepared by	Clayton Powers
Location	30 Cleary Avenue, Ottawa, ON

Pipe Table - Average Daily Flow							
Start Node	**End Node**	**Length (m)**	**Diam (mm)**	**Material**	**Hazen-William C**	**Flow (L/s)**	**Velocity (m/s)**
J3	20 Cleary	24	250	PVC	110	-0.58	0.01
Entrance 1	J3	43	250	PVC	110	-0.57	0.01
J3	FH No.2	26	200	Ductile Iron	110	0.00	0.00
FH No.2	FH No.1	64	150	Ductile Iron	110	0.00	0.00
J1	Connection 1	14	250	PVC	110	-0.88	0.02
20 Cleary	J2	75	250	PVC	110	-0.87	0.02
J2	J1	23	250	PVC	110	-0.88	0.02
40 Cleary	Entrance 1	40	150	PVC	110	-0.02	0.00
J2	30 Cleary	111	150	Ductile Iron	110	0.02	0.00
Entrance 2 + FH3	Entrance 1	18	250	PVC	110	-0.56	0.01
Connection 2	J4	192	250	PVC	110	0.70	0.01
J4	Entrance 2 + FH3	42	250	PVC	110	0.70	0.01
J3	J4	5	250	PVC	110	0.01	0.00

Junction Table - Average Daily Flow				
Junction ID	**Ground Elevation (m)**	**Demand (L/s)**	**Pressure (psi)**	**Description**
Entrance 2 + FH3	62.15	1.26	75.30	Proposed Dev + FH
40 Cleary	62.50	0.02	74.81	40 Cleary
20 Cleary	61.10	0.29	76.79	20 Cleary
J1	61.90	0.00	75.66	
Entrance 1	62.10	0.00	75.37	
J3	60.16	0.00	78.13	
FH No.2	59.40	0.00	79.21	FH
J2	61.73	0.00	75.90	
30 Cleary	58.90	0.02	79.92	30 Cleary
FH No.1	60.16	0.00	78.13	FH
J4	71.72	0.00	61.72	

Water System Calculations

LRL File No.	230437
Date	09-Sep-26
Prepared by	Clayton Powers
Location	30 Cleary Avenue, Ottawa, ON

Pipe Table - Max Daily Demand + Fire Flow							
Start Node	**End Node**	**Length (m)**	**Diam (mm)**	**Material**	**Hazen-William C**	**Flow (L/s)**	**Velocity (m/s)**
J3	20 Cleary	24	250	PVC	110	-72.12	1.47
Entrance 1	J3	43	250	PVC	110	-35.44	0.72
J3	FH No.2	26	200	PVC	110	86.00	2.74
FH No.2	FH No.1	64	150	PVC	110	35.50	2.01
J1	Connection 1	14	250	PVC	110	-72.87	1.48
20 Cleary	J2	75	250	PVC	110	-72.85	1.48
J2	J1	23	250	PVC	110	-72.87	1.48
40 Cleary	Entrance 1	40	250	PVC	110	-0.02	0.00
J2	30 Cleary	111	150	PVC	110	0.02	0.00
Entrance 2 + FH3	Entrance 1	18	250	PVC	110	-35.42	0.72
Connection 2	J4	192	250	PVC	110	98.67	2.01
J4	Entrance 2 + FH	42	250	PVC	110	49.35	1.01
J3	J4	5	250	PVC	110	-49.32	1.00

Junction Table - Max Daily Demand + Fire Flow				
Junction ID	**Ground Elevation (m)**	**Demand (L/s)**	**Pressure (psi)**	**Description**
Entrance 2 + FH3	62.15	84.77	47.99	Proposed Dev + FH
40 Cleary	62.50	0.02	47.59	40 Cleary
20 Cleary	61.10	0.72	50.32	20 Cleary
J1	61.90	0.00	50.88	
Entrance 1	62.10	0.00	48.15	
J3	60.16	0.00	51.13	
FH No.2	59.40	50.50	50.28	FH
J2	61.73	0.00	50.68	
30 Cleary	58.90	0.02	54.69	30 Cleary
FH No.1	60.16	35.50	45.55	FH
J4	60.16	0.00	51.19	

Water System Calculations

LRL File No.	230437
Date	09-Sep-26
Prepared by	Clayton Powers
Location	30 Cleary Avenue, Ottawa, ON

Pipe Table - Max Hourly Demand							
Start Node	**End Node**	**Length (m)**	**Diam (mm)**	**Material**	**Hazen-William C**	**Flow (L/s)**	**Velocity (m/s)**
J3	20 Cleary	24	250	PVC	110	-2.73	0.06
Entrance 1	J3	43	250	PVC	110	-2.77	0.06
J3	FH No.2	26	200	Ductile Iron	110	0.00	0.00
FH No.2	FH No.1	64	150	Ductile Iron	110	0.00	0.00
J1	Connection 1	14	250	PVC	110	-4.37	0.09
20 Cleary	J2	75	250	PVC	110	-4.32	0.09
J2	J1	23	250	PVC	110	-4.37	0.09
40 Cleary	Entrance 1	40	150	PVC	110	-0.04	0.00
J2	30 Cleary	111	150	Ductile Iron	110	0.04	0.00
Entrance 2 + FH3	Entrance 1	18	250	PVC	110	-2.73	0.06
Connection 2	J4	192	250	PVC	110	3.39	0.07
J4	Entrance 2 + FH	42	250	PVC	110	3.35	0.07
J3	J4	5	250	PVC	110	-0.03	0.00

Junction Table - Max Hourly Demand				
Junction ID	**Ground Elevation (m)**	**Demand (L/s)**	**Pressure (psi)**	**Description**
Entrance 2 + FH3	62.15	6.08	66.06	Proposed Dev + FH
40 Cleary	62.50	0.04	65.57	40 Cleary
20 Cleary	61.10	1.59	67.56	20 Cleary
J1	61.90	0.00	66.43	
Entrance 1	62.10	0.00	66.13	
J3	60.16	0.00	68.89	
FH No.2	59.40	0.00	69.97	FH
J2	61.73	0.00	66.67	
30 Cleary	58.90	0.04	70.69	30 Cleary
FH No.1	60.16	0.00	68.89	FH
J4	70.55	0.00	54.14	

Water System Calculations

LRL File No.	230437
Date	09-Sep-26
Prepared by	Clayton Powers
Location	30 Cleary Avenue, Ottawa, ON

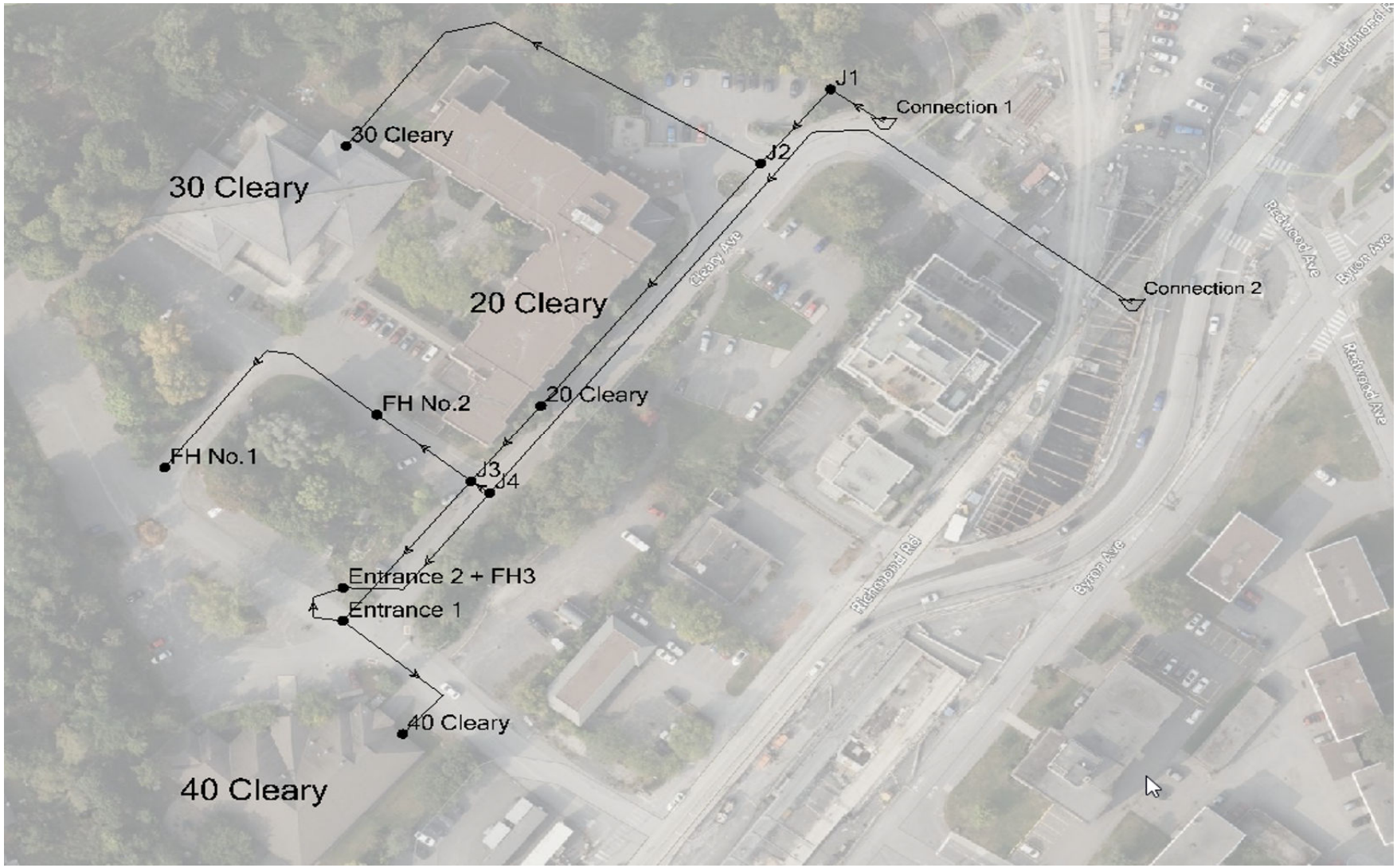

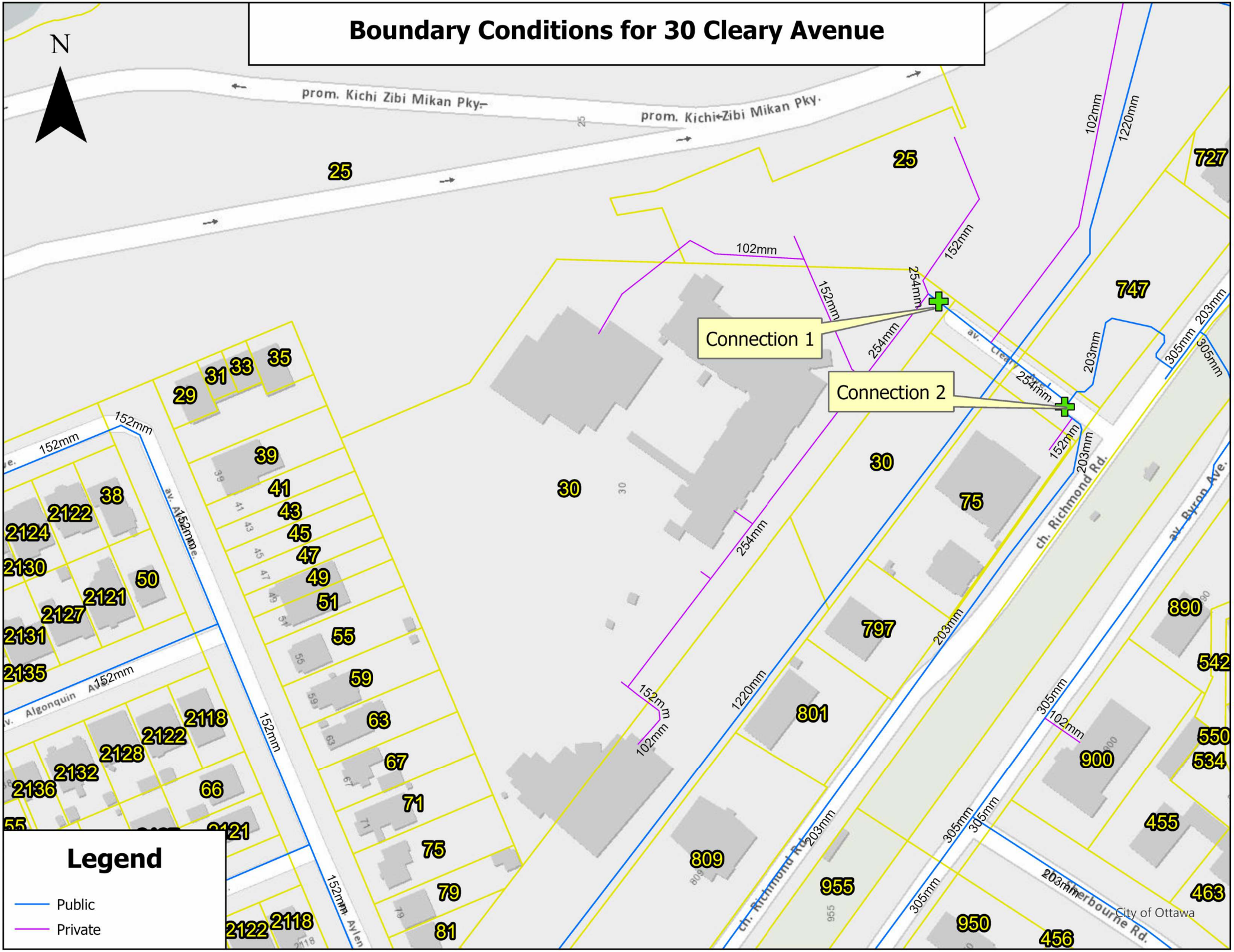
Boundary Conditions for 30 Cleary Avenue
N
prom. Kichi Zibi Mikan Pky.
prom. Kichi Zibi Mikan Pky.
Connection 1
Connection 2
25
30
747
727
75
797
801
809
955
900
890
542
550
534
455
463
456
950
102mm
152mm
254mm
203mm
305mm
1220mm
av. Algonquin Ave.
ch. Richmond Rd.
av. Byron Ave.
Merivale Rd.
Legend
Public
Private
City of Ottawa

Sarthak Vora

From: Dieme, Abi <Abibatou.Dieme@ottawa.ca>
Sent: Friday, January 16, 2026 2:04 PM
To: Sarthak Vora
Cc: Virginia Johnson; Roy, Jean-Miguel; Shen, Stream
Subject: RE: 30 Cleary Ave_Boundary Conditions request
Attachments: 30 Cleary Avenue January 2026.pdf

Follow Up Flag: Follow up
Flag Status: Flagged

Hi Sarthak,

The following are boundary conditions, HGL, for hydraulic analysis at 30 Cleary Avenue (zone 1W) assumed to be connected via two (2) connections as identified below: (see attached PDF for location).

Connection 1 – 254 mm on Cleary Ave.
Minimum HGL = 108.7 m
Maximum HGL = 115.2 m
Max Day + Fire Flow (166.67 L/s) = 98.0 m

Connection 2 – 203 mm on Richmond Rd.
Minimum HGL = 108.7 m
Maximum HGL = 115.2 m
Max Day + Fire Flow (166.67 L/s) = 100.3 m

These are for current conditions and are based on computer model simulation.

Disclaimer: The boundary condition information is based on current operation of the city water distribution system. The computer model simulation is based on the best information available at the time. The operation of the water distribution system can change on a regular basis, resulting in a variation in boundary conditions. The physical properties of watermains deteriorate over time, as such must be assumed in the absence of actual field test data. The variation in physical watermain properties can therefore alter the results of the computer model simulation. Fire Flow analysis is a reflection of available flow in the watermain; there may be additional restrictions that occur between the watermain and the hydrant that the model cannot take into account.

Regards,
Abi

Classified as City of Ottawa - Internal / Ville d'Ottawa - classé interne

From: Sarthak Vora <svora@lrl.ca>
Sent: Tuesday, January 6, 2026 9:13 AM
To: Dieme, Abi <Abibatou.Dieme@ottawa.ca>
Cc: Virginia Johnson <vjohnson@lrl.ca>
Subject: RE: 30 Cleary Ave_Boundary Conditions request

CAUTION: This email originated from an External Sender. Please do not click links or open attachments unless you recognize the source.

ATTENTION : Ce courriel provient d'un expéditeur externe. Ne cliquez sur aucun lien et n'ouvrez pas de pièce jointe, excepté si vous connaissez l'expéditeur.

Hi Abi,

I would like to re-request boundary conditions for the proposed water servicing layout associated with our development. We are now proposing two connection points, and I'm requesting boundary conditions accordingly.

Connection #1:
A proposed 150 mm diameter water service connecting directly to the existing 250 mm diameter watermain located within the Cleary Avenue right-of-way, in front of the existing pre-school building. I understand that City infrastructure ends at the property boundary; therefore, we request boundary conditions at that junction.

Connection #2:
A proposed 150 mm diameter water service connecting directly to the existing 200 mm diameter watermain within the Richmond Road right-of-way.

Please see the attached snip/servicing plan for reference and below are the demands from the proposed development. Please let me know if any further details are required.

Boundary Conditions Request:

	Demand (L/s)
Avg. Daily	**1.26**
Max. Day + FUS	**4.07 + 166.7**
Peak Hour	**6.08**

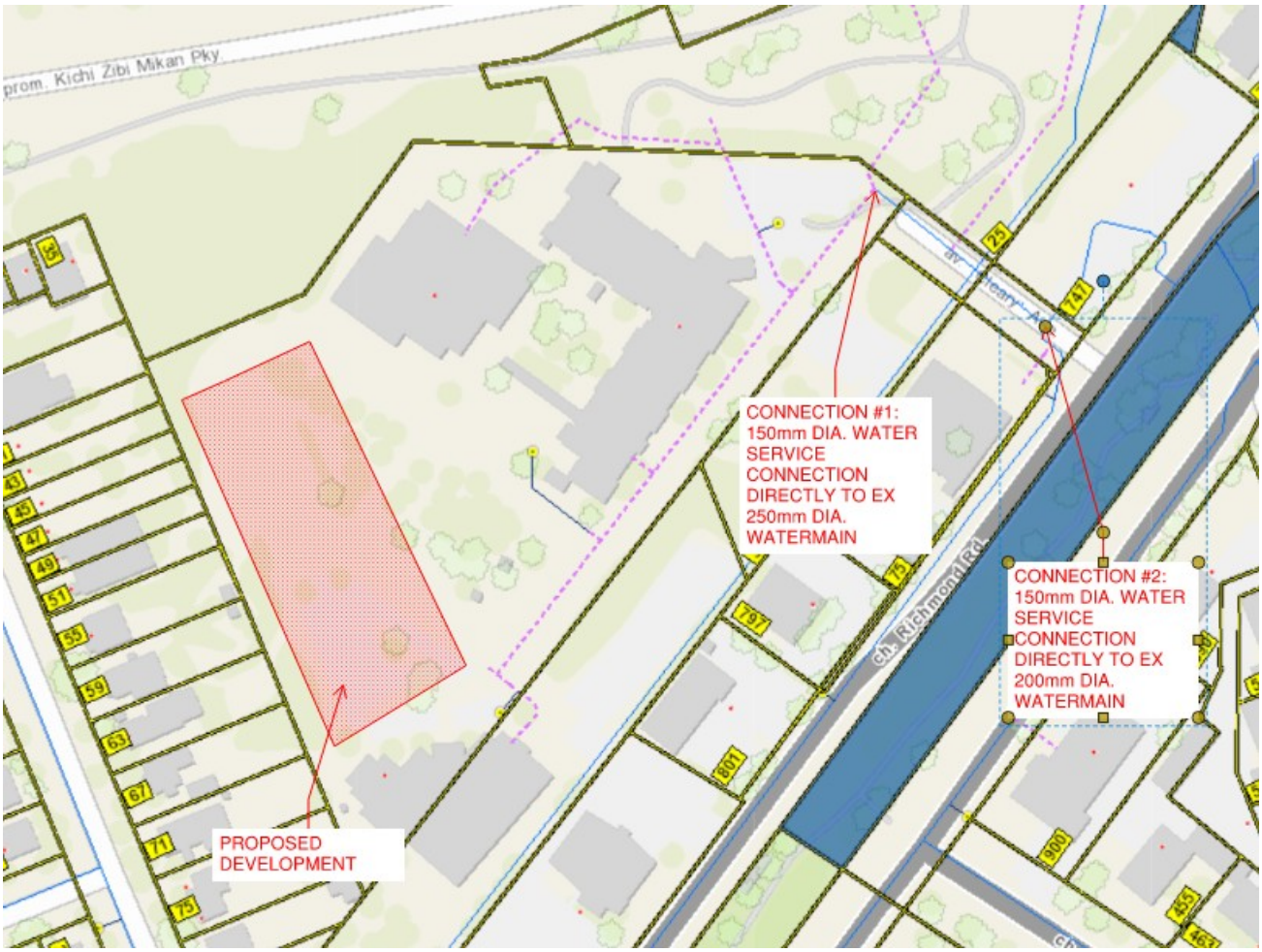

Thanks,

Sarthak Vora, Civil E.I.T

LRL ENGINEERING | INGÉNIERIE
Head Office – 5430 Canotek Rd., Ottawa, ON
T +1 613-842-3434 **C** +1 613-915-7633 **E** svora@lrl.ca
Ottawa | *Pembroke* | *Moncton*
www.lrl.ca

'

This e-mail originates from the City of Ottawa e-mail system. Any distribution, use or copying of this e-mail or the information it contains by other than the intended recipient(s) is unauthorized. Thank you.

Le présent courriel a été expédié par le système de courriels de la Ville d'Ottawa. Toute distribution, utilisation ou reproduction du courriel ou des renseignements qui s'y trouvent par une personne autre que son destinataire prévu est interdite. Je vous remercie de votre collaboration.

'

Sarthak Vora

From: Dieme, Abi <Abibatou.Dieme@ottawa.ca>
Sent: Wednesday, June 4, 2025 3:52 PM
To: Sarthak Vora
Cc: Virginia Johnson; Roy, Jean-Miguel
Subject: RE: 30 Cleary Ave_Boundary Conditions req

Sarthak – I apologize for the delayed response. JM and I have coordinated with the LRT team. They've confirmed there is adequate capacity to accommodate the additional flow below. Please let me know if you need further details.

Regards,
Abi

Classified as City of Ottawa - Internal / Ville d'Ottawa - classé interne

From: Sarthak Vora <svora@lrl.ca>
Sent: Wednesday, May 21, 2025 4:52 PM
To: Dieme, Abi <Abibatou.Dieme@ottawa.ca>
Cc: Virginia Johnson <vjohnson@lrl.ca>; Roy, Jean-Miguel <Jean-Miguel.Roy@ottawa.ca>
Subject: RE: 30 Cleary Ave_Boundary Conditions req

CAUTION: This email originated from an External Sender. Please do not click links or open attachments unless you recognize the source.

ATTENTION : Ce courriel provient d'un expéditeur externe. Ne cliquez sur aucun lien et n'ouvrez pas de pièce jointe, excepté si vous connaissez l'expéditeur.

Hi Abi,

Thanks for the confirmation. I can't seem to find the Sanitary Sewer capacity confirmation.

Sanitary Sewer Capacity Confirmation Request:

Could you please confirm the available sanitary sewer capacity for the proposed development.

Based on our calculations, the revised sanitary sewer discharge from the prop development is estimated at **4.98 L/s**. We are proposing to connect this flow to the existing 200mmØ sanitary sewer along Cleary Avenue, which discharges into existing sanitary sewer within Richmond Road.

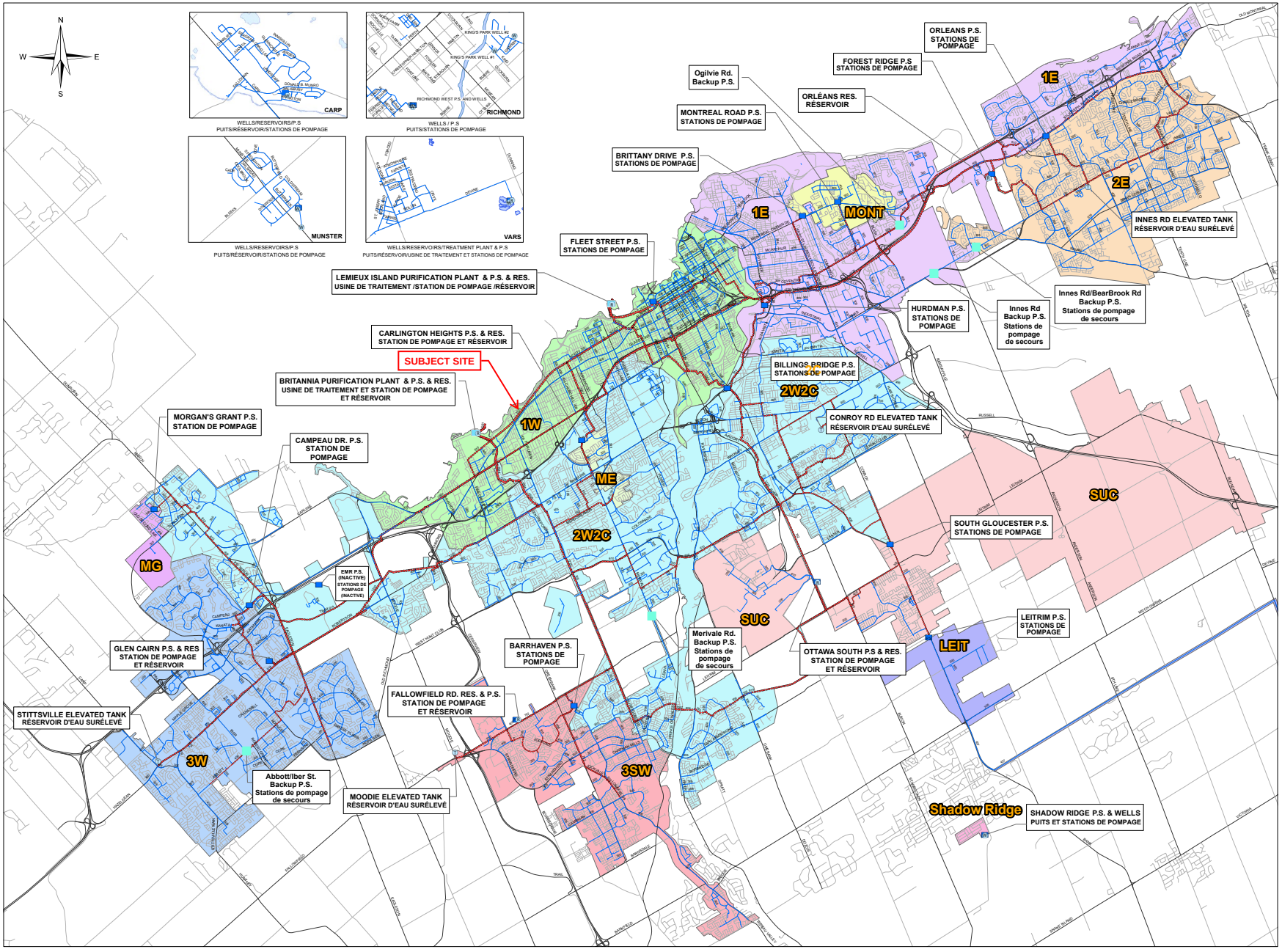
N
W
E
S
CARP
WELLS/RESERVOIRS/P.S
PUITS/RÉSERVOIR/STATIONS DE POMPAGE
RICHMOND
WELLS / P.S
PUITS/STATIONS DE POMPAGE
MUNSTER
WELLS/RESERVOIRS/P.S
PUITS/RÉSERVOIR/STATIONS DE POMPAGE
VARS
WELLS/RESERVOIRS/TREATMENT PLANT & P.S
PUITS/RÉSERVOIR/USINE DE TRAITEMENT ET STATIONS DE POMPAGE
ORLEANS P.S. STATIONS DE POMPAGE
FOREST RIDGE P.S STATIONS DE POMPAGE
Ogilvie Rd. Backup P.S.
ORLÉANS RES. RÉSERVOIR
MONTREAL ROAD P.S. STATIONS DE POMPAGE
BRITTANY DRIVE P.S. STATIONS DE POMPAGE
FLEET STREET P.S. STATIONS DE POMPAGE
LEMIEUX ISLAND PURIFICATION PLANT & P.S. & RES.
USINE DE TRAITEMENT /STATION DE POMPAGE /RÉSERVOIR
CARLINGTON HEIGHTS P.S. & RES.
STATION DE POMPAGE ET RÉSERVOIR
SUBJECT SITE
BRITANNIA PURIFICATION PLANT & P.S. & RES.
USINE DE TRAITEMENT ET STATION DE POMPAGE ET RÉSERVOIR
MORGAN'S GRANT P.S.
STATION DE POMPAGE
CAMPEAU DR. P.S.
STATION DE POMPAGE
HURDMAN P.S. STATIONS DE POMPAGE
Innes Rd Backup P.S. Stations de pompage de secours
Innes Rd/BearBrook Rd Backup P.S. Stations de pompage de secours
INNES RD ELEVATED TANK
RÉSERVOIR D'EAU SURÉLÉVÉ
BILLINGS BRIDGE P.S.
STATIONS DE POMPAGE
CONROY RD ELEVATED TANK
RÉSERVOIR D'EAU SURÉLÉVÉ
SOUTH GLOUCESTER P.S.
STATIONS DE POMPAGE
EMR P.S. (INACTIVE)
STATIONS DE POMPAGE (INACTIVE)
LEITRIM P.S.
STATIONS DE POMPAGE
Merivale Rd. Backup P.S.
Stations de pompage de secours
BARRHAVEN P.S.
STATIONS DE POMPAGE
OTTAWA SOUTH P.S & RES.
STATION DE POMPAGE ET RÉSERVOIR
GLEN CAIRN P.S. & RES
STATION DE POMPAGE ET RÉSERVOIR
FALLOWFIELD RD. RES. & P.S.
STATION DE POMPAGE ET RÉSERVOIR
STITTSVILLE ELEVATED TANK
RÉSERVOIR D'EAU SURÉLÉVÉ
Abbott/Iber St. Backup P.S.
Stations de pompage de secours
MOODIE ELEVATED TANK
RÉSERVOIR D'EAU SURÉLÉVÉ
SHADOW RIDGE P.S. & WELLS
PUITS ET STATIONS DE POMPAGE
1E
2E
MONT
1W
2W2C
ME
MG
3W
3SW
SUC
LEIT
Shadow Ridge

FIRE HYDRANT LOCATIONS
30 Cleary Avenue

LEGEND
Hydrants within 75m
Hydrants within 150m

Table 18.5.4.3 Maximum Fire Hydrant Fire Flow Capacity

Distance to Building[a]		Maximum Capacity[b]	
(ft)	(m)	(gpm)	(L/min)
≤ 250	≤ 76	1500	5678
> 250 and ≤ 500	> 76 and ≤ 152	1000	3785
> 500 and ≤ 1000	> 152 and ≤ 305	750	2839

[a]Measured in accordance with 18.5.1.4 and 18.5.1.5.
[b]Minimum 20 psi (139.9 kPa) residual pressure.

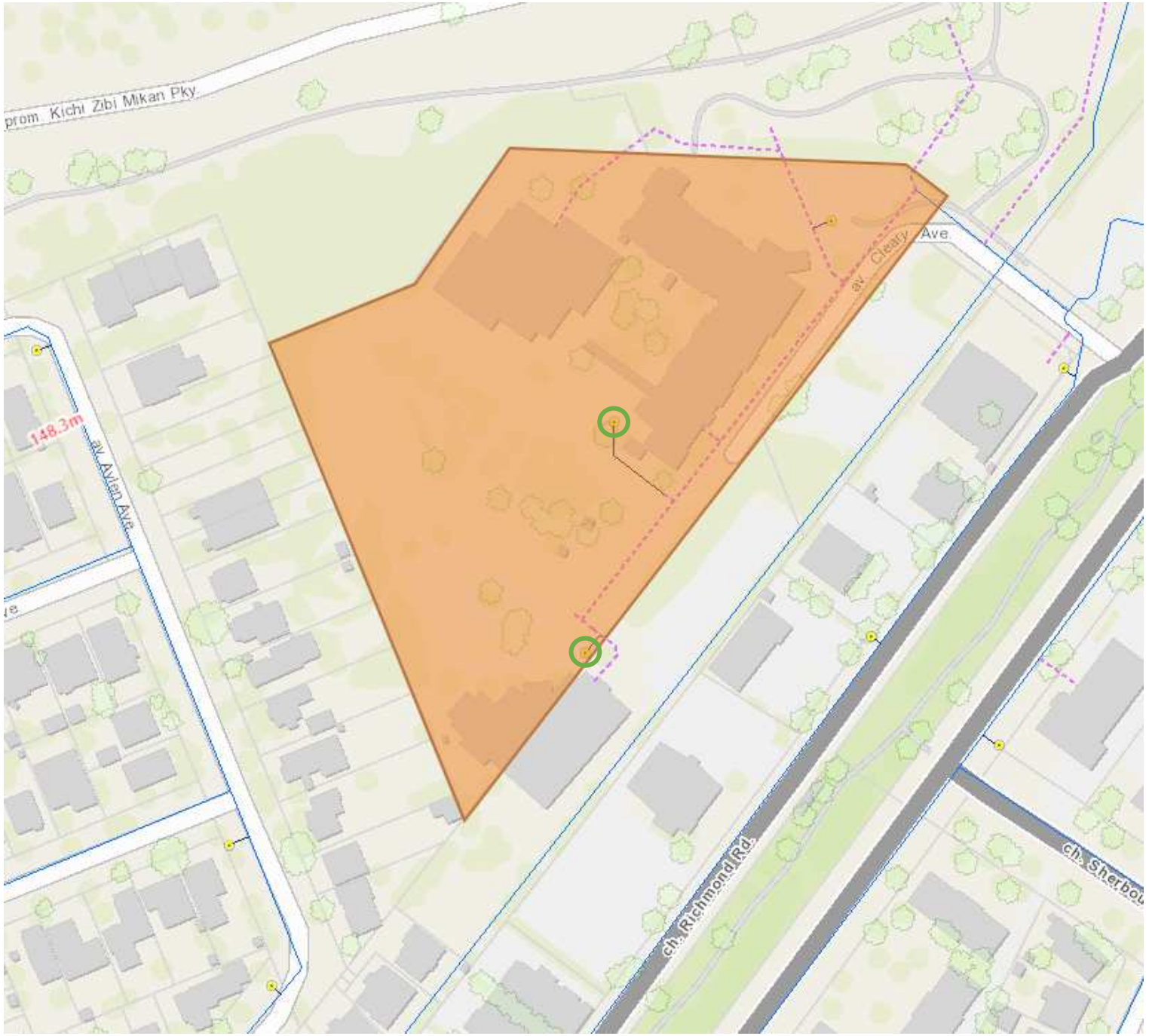

Could you please provide the following info to assist us?

Link to FUS 2020: Downloads (fireunderwriters.ca) (Water Supply for Public Fire Protection)

1. **Can you confirm if sprinklers are proposed for the building?**
   If yes, will the sprinkler system be fully supervised and automatic?

Choose reduction for sprinklers	Sprinkler reduction	Full automatic sprinklers	-30%
		Water supply is standard for both the system and fire department hose lines	-10%
		Fully supervised system	-10%

2. **Can you confirm the ' Type of Building Construction'?**

The following Construction Types and Coefficients are used in the required fire flow formula:

C = 1.5 for **Type V** Wood Frame Construction
= 0.8 for **Type IV-A** Mass Timber Construction
= 0.9 for **Type IV-B** Mass Timber Construction
= 1.0 for **Type IV-C** Mass Timber Construction
= 1.5 for **Type IV-D** Mass Timber Construction
= 1.0 for **Type III** Ordinary Construction
= 0.8 for **Type II** Noncombustible Construction
= 0.6 for **Type I** Fire Resistive Construction

3. **Can you please confirm the type of Occupancy contents? See info below.**

- *Noncombustible Contents* *-25%*
  - Includes merchandise or materials, including stock, or equipment, which in permissible quantities does not in themselves constitute an active fuel for the spread of fire.
  - May include limited or controlled amounts of combustible material, not exceeding 5% of the Total Effective Area of the occupancy. Combustible components of construction (ex. interior walls, finishes, etc.) should be included in the limit on combustible materials.
- *Limited Combustible Contents* *-15%*
  - Includes merchandise or materials, including furniture, stock, or equipment, of low combustibility, with limited concentrations of combustible materials.
- Combustible Contents 0% no adjustment
  - Includes merchandise or materials, including furniture, stock, or equipment, of moderate combustibility.
- *Free Burning Contents* *+15%*
  - Includes merchandise or materials, including furniture, stock, or equipment, which burn freely, constituting an active fuel.
- *Rapid Burning Contents* *+25%*
  - Includes merchandise or materials, including furniture, stock, or equipment, which either
    - Burn with great intensity
    - spontaneously ignite and are difficult to extinguish
    - give off flammable or explosive vapors at ordinary temperatures
    - as a result of an industrial processing, produce large quantities of dust or other finely divided debris subject to flash fire or explosion

Please let me know if there are any questions.

Thanks,

APPENDIX E

Sanitary Calculations

LRL File No. 230437
Project: 30 Cleary Avenue Odayanhaway Development
Location: 30 Cleary Avenue, Ottawa, ON
Date: September 15, 2026

Sanitary Design Parameters

Average Daily Flow = 280 L/p/day
Commercial & Institutional Flow = 28000 L/ha/day
Light Industrial Flow = 35000 L/ha/day
Heavy Industrial Flow = 55000 L/ha/day
Maximum Residential Peak Factor = 4.0
Commercial & Institutional Peak Factor = 1.00
Industrial Peak Factor = as per Appendix 4-B = 7
Extraneous Flow = 0.33L/s/gross ha

Pipe Design Parameters

Minimum Velocity = 0.60 m/s
Manning's n = 0.013

LOCATION			RESIDENTIAL AREA AND POPULATION						COMMERCIAL		INDUSTRIAL			INSTITUTIONAL		C+I+I	INFILTRATION			TOTAL FLOW (l/s)	PIPE					
STREET	FROM	TO	AREA (Ha)	POP.	CUMMULATIVE AREA (Ha)	CUMMULATIVE POP.	PEAK FACT.	PEAK FLOW (l/s)	AREA (Ha)	ACCU. AREA (Ha)	AREA (Ha)	ACCU. AREA (Ha)	PEAK FACT.	AREA (Ha)	ACCU. AREA (Ha)	PEAK FLOW (l/s)	TOTAL AREA (Ha)	ACCU. AREA (Ha)	INFILT. FLOW (l/s)		LENGTH (m)	DIA. (mm)	SLOPE (%)	MATERIAL	CAP. (FULL) (l/s)	VEL. (FULL) (m/s)
Cleary Avenue	Proposed	*MH51048*	0.470	389.8	0.47	389.8	3.4	4.32	0.000	0.000	0.00	0.00	0.0	0.0	0.0	0.00	0.470	0.470	0.16	4.48	6.5	200	2.14%	PVC	47.98	1.53
Cleary Avenue	Daycare	*MH51049*	0.130	67.0	0.13	67.0	3.6	0.17	0.000	0.000	0.00	0.00	0.0	0.0	0.0	0.00	0.130	0.130	0.04	0.21	16.1	150	0.50%	PVC	10.77	0.61
Cleary Avenue	MH51049	*MH51048*	0.130	67.0	0.13	67.0	3.6	0.17	0.000	0.000	0.00	0.00	0.0	0.0	0.0	0.00	0.130	0.130	0.04	0.21	10.7	150	3.17%	PVC	27.12	1.53
Cleary Avenue	*MH51048*	*MH51047*	0.600	456.8	0.60	456.8	3.4	4.49	0.000	0.000	0.00	0.00	0.0	0.0	0.0	0.00	0.600	0.600	0.20	4.69	38.8	200	4.32%	PVC	68.17	2.17
Cleary Avenue	Unitarian House	*MH51046*	0.260	130.0	0.26	130.0	3.6	1.32	0.000	0.000	0.00	0.00	0.0	0.0	0.0	0.00	0.260	0.260	0.09	1.41	12.1	200	0.50%	PVC	23.19	0.74
Cleary Avenue	*MH51047*	*MH51046*	0.600	456.8	0.60	456.8	3.4	4.49	0.000	0.000	0.00	0.00	0.0	0.0	0.0	0.00	0.600	0.600	0.20	4.69	70.1	250	0.50%	UNK	42.05	0.86
Cleary Avenue	*MH51046*	*MH26168*	0.860	586.8	0.86	586.8	3.3	5.81	0.000	0.000	0.00	0.00	0.0	0.0	0.0	0.00	0.860	0.860	0.28	6.10	43.4	250	0.30%	UNK	32.57	0.66
Cleary Avenue	Church	*MH26168*	0.140	100.0	0.14	100.0	1.0	0.03	0.000	0.000	0.00	0.00	0.0	0.0	0.0	0.00	0.140	0.140	0.05	0.08	24.1	250	0.50%	Conc	42.05	0.86
Cleary Avenue	*MH26168*	*MH26169 Cleary Ave to Richmond Rd*	1.000	686.8	1.00	686.8	3.3	5.85	0.000	0.000	0.00	0.00	0.0	0.0	0.0	0.00	1.000	1.000	0.33	6.18	11.3	250	0.35%	PVC	35.18	0.72

Designed: S.V.	PROJECT: 30 Cleary Avenue Odayanhaway Development		
Checked: V.J.	LOCATION: 30 Cleary Avenue, Ottawa, ON		
Dwg. Reference: C.401	File Ref.: 230437	Date: September 15, 2026	Sheet No. 1 of 1

APPENDIX F

Stormwater Management Calculations
Stormceptor OGS
WATTS Roof Drain
ACO Stormbrixx

LRL Associates Ltd.

Storm Watershed Summary

LRL File No.	230437
Project:	30 Cleary Avenue Odayanhaway Development
Location:	30 Cleary Ave., Ottawa, ON
Date:	September 22, 2026
Designed:	Sarthak Vora
Drawing Reference:	C701/C702

Pre-Development Catchments

CATCHMENT	C = 0.2	C=0.7	C = 0.90	Total Area (m^2)	Total Area (ha)	Combined C	Outlet Direction
ECA-01A (NCC)	962.7	0.0	0.0	962.70	0.096	0.20	NCC
ECA-01B (NCC)	754.1	0.0	544.4	1298.50	0.130	0.49	NCC
ECA-02A (NCC)	215.5	158.3	510.0	883.81	0.088	0.69	NCC
ECA-02B (NCC)	454.8	0.0	0.0	454.77	0.045	0.20	NCC
ECA-03A (NCC)	98.0	0.0	145.0	243.00	0.024	0.62	NCC
ECA-03B (NCC)	209.6	0.0	802.6	1012.11	0.101	0.76	NCC
ECA-04A (NCC)	457.9	1121.9	458.2	2038.00	0.204	0.63	NCC
ECA-04B (NCC)	306.2	156.2	0.0	462.41	0.046	0.37	NCC
ECA-05 (CLEARY)	582.3	0.0	739.1	1321.40	0.132	0.59	Cleary
ECA-06A (CLEARY AVE)	247.7	0.0	631.9	879.60	0.088	0.70	Cleary
ECA-06B (CLEARY AVE)	0.0	0.0	262.6	262.58	0.026	0.90	Cleary
ECA-07 (CLEARY AVE)	31.1	0.0	301.2	332.20	0.033	0.83	Cleary
ECA-08 (CLEARY AVE)	9.6	46.8	138.4	194.70	0.019	0.82	Cleary
ECA-09A (CLEARY AVE)	0.0	142.0	287.0	429.00	0.043	0.83	Cleary
ECA-09B (CLEARY AVE)	615.7	139.8	504.3	1259.70	0.126	0.54	Cleary
ECA-10 (CLEARY AVE)	819.2	0.0	1255.0	2074.20	0.207	0.62	Cleary
ECA-11 (CLEARY AVE)	280.1	0.0	1669.9	1950.01	0.195	0.80	Cleary
ECA-12 (CLEARY AVE)	1397.1	0.0	3234.4	4631.50	0.463	0.69	Cleary
TOTAL	**7441.3**	**1765.0**	**11483.9**	**20690.19**	**2.069**	**0.59**	

TOTAL- NCC	**3458.7**	**1436.5**	**2460.1**	**7355.30**	**0.736**	**0.53**
TOTAL- Cleary Outlet	**3982.6**	**328.5**	**9023.7**	**13334.89**	**1.333**	**0.69**

LRL Associates Ltd.

Storm Watershed Summary

Post-Development Catchments

CATCHMENT	C = 0.20	C = 0.90	C = 0.90	Total Area (m^2)	Total Area (ha)	Combined C
CA-01A UNCONTROLLED (NCC)	543.00	0.00	202.00	745.00	0.075	0.39
CA-02A ROOF-CONTROLLED (Market Bldg)	0.00	0.00	458.00	458.00	0.046	0.90
CA-02B ROOF-CONTROLLED (Market Bldg)	0.00	0.00	140.00	140.00	0.014	0.90
CA-02C ROOF-CONTROLLED (Market Bldg)	0.00	0.00	179.00	179.00	0.018	0.90
CA-02D (Market Bldg)	0.00	0.00	216.00	216.00	0.022	0.90
CA-03A ROOF-CONTROLLED (OAHS Bldg)	0.00	0.00	235.00	235.00	0.024	0.90
CA-03B ROOF-CONTROLLED (OAHS Bldg)	0.00	0.00	755.00	755.00	0.076	0.90
CA-04 UN-CONTROLLED (Front of OAHS) (NCC)	192.34	131.66	0.00	324.00	0.032	0.48
CA-05A CONTROLLED (Front of Market)(NCC)	76.50	1083.58	0.00	1160.08	0.116	0.85
CA-05B UN-CONTROLLED (Front of Market)(NCC)	210.50	57.50	0.00	268.00	0.027	0.35
CA-07A CONTROLLED (CLEARY)	190.00	0.00	0.52	190.00	0.019	0.20
CA-07B CONTROLLED (CLEARY)	0.20	0.00	481.16	481.36	0.048	0.90
CA-08 CONTROLLED (RAMP) (CISTERN)	0.00	0.00	130.00	130.00	0.013	0.90
CA-09 CONTROLLED (CLEARY)	566.72	0.00	692.59	1259.31	0.126	0.58
CA-10 CONTROLLED (CLEARY)	0.00	0.00	360.00	360.00	0.036	0.90
TOTAL	**1779.3**	**1272.7**	**3849.3**	**6900.8**	**0.690**	**0.72**

TOTAL- NCC OUTLET	**1022.3**	**1272.7**	**2315.0**	**4610.1**	**0.461**	**0.74**
TOTAL- CLEARY OUTLET	**756.9**	**0.0**	**1534.3**	**2290.7**	**0.229**	**0.67**

LRL Associates Ltd.

Storm Watershed Summary

LRL File No.	230437
Project:	30 Cleary Avenue Odayanhaway Development
Location:	30 Cleary Ave., Ottawa, ON
Date:	September 22, 2026
Designed:	Clayton Powers
Drawing Reference:	C701/C702

Parameters	Existing	Proposed (100yr Event)			
		Controlled		Uncontrolled	Total
		Roof	Cistern		
NCC Drainage Area (ha)	0.466	0.177	0.156	0.138	0.471
Runoff Coeff, C	0.50	1.00	1.00	0.50	0.93
Allowable Release Rate (L/s)	64.64	12.97	17.52	34.15	64.64
Runoff Volume (cu.m)	66.468	7.782	10.512	20.490	38.784

LRL ENGINEERING | INGÉNIERIE

LRL File No. 230437
Project: 30 Cleary Avenue Odayanhaway Development
Location: 30 Cleary Ave., Ottawa, ON
Date: September 22, 2026
Designed: Sarthak Vora
Drawing Ref.: C701

Stormwater Management Design Sheet

Runoff Equation

Q = 2.78CIA (L/s)
C = Runoff coefficient
I = Rainfall intensity (mm/hr) = $A / (Td + C)^B$
A = Area (ha)
T_c = Time of concentration (min)

Pre-development Stormwater Releasing towards NCC LANDS- 5 Year Storm (ECA 01,02A, 03A, 04)

5 year storm

I5 = 998.071 / (Td + 6.053)$^{0.814}$ **a = 998.071** **b = 0.814** **C = 6.053**

C =	0.50	max of 0.5 as per City of Ottawa	
I =	104.2	mm/hr	
Tc =	10	min	
Total Area =	0.446	ha	Only the altered catchments (ECA 01B, 02A,03A, 04A are considered to determine the pre-development area.

Allowable Release Rate to NCC Lands= **64.64** **L/s** 136.51

Post-development Stormwater Management: 5-YR

Towards NCC Lands

		Area	ha	∑R=	$\sum R_{2\&5}$	$\sum R_{100}$
Roof- Controlled	CA-02A ROOF-CONTROLLED (Market Bldg)	0.046	ha	R=	0.90	1.00
	CA-02B ROOF-CONTROLLED (Market Bldg)	0.014	ha	R=	0.90	1.00
	CA-02C ROOF-CONTROLLED (Market Bldg)	0.018	ha	R=	0.90	1.00
	CA-03A ROOF-CONTROLLED (OAHS Bldg)	0.024	ha	R=	0.90	1.00
	CA-03B ROOF-CONTROLLED (OAHS Bldg)	0.076	ha	R=	0.90	1.00
	Total Roof- Controlled	**0.177**	**ha**	**∑R=**	**0.90**	**1.00**

5 Year Post-development Stormwater Management (CA-02A Roof-Controlled) CP@2026++

Time (min)	Intensity (mm/hr)	Controlled Runoff (L/s)	Storage Volume (m^3)	Controlled Release Rate (L/s)	Uncontrolled Runoff (L/s)	Total Release Rate (L/s)
10	104.19	13.27	6.25	2.85	0.00	2.85
15	83.56	10.64	7.01	2.85	0.00	2.85
20	70.25	8.94	7.31	2.85	0.00	2.85
25	60.90	7.75	7.36	2.85	0.00	2.85
30	53.93	6.87	7.23	2.85	0.00	2.85
35	48.52	6.18	6.99	2.85	0.00	2.85
40	44.18	5.63	6.66	2.85	0.00	2.85
45	40.63	5.17	6.27	2.85	0.00	2.85
50	37.65	4.79	5.83	2.85	0.00	2.85
55	35.12	4.47	5.35	2.85	0.00	2.85
60	32.94	4.19	4.84	2.85	0.00	2.85
70	29.37	3.74	3.74	2.85	1.00	3.85
80	26.56	3.38	2.55	2.85	2.00	4.85
90	24.29	3.09	1.31	2.85	3.00	5.85
100	22.41	2.85	0.02	2.85	4.00	6.85
110	20.82	2.65	0.00	2.85	5.00	7.85
120	19.47	2.48	0.00	2.85	6.00	8.85

Summary of Roof Storage

Minimum Required Roof Storage (5 Year) =	7.36	m^3	
Proposed Head =	150	mm	*An Emergency overflow scupper is provided above this height.
Control Flow/Drain =	0.95	L/s	
Number of Roof Drains =	**3**		
Total Flow from Roof Drain =	2.85	L/s	
Available Roof Storage =	**25.44**	m^3	(20% reduction considered)
Roof Drain Model =	*WATTS Roof Drain- 1/4 Exposed Weir Opening*		

LRL
ENGINEERING | INGÉNIERIE

LRL File No. 230437
Project: 30 Cleary Avenue Odayanhaway Development
Location: 30 Cleary Ave., Ottawa, ON
Date: September 22, 2026
Designed: Sarthak Vora
Drawing Ref.: C701

Stormwater Management Design Sheet

5 Year Post-development Stormwater Management (CA-02B Roof-Controlled)

Time (min)	Intensity (mm/hr)	Controlled Runoff (L/s)	Storage Volume (m^3)	Controlled Release Rate (L/s)	Uncontrolled Runoff (L/s)	Total Release Rate (L/s)
10	104.19	4.06	1.29	1.90	0.00	1.90
15	83.56	3.25	1.22	1.90	0.00	1.90
20	70.25	2.73	1.00	1.90	0.00	1.90
25	60.90	2.37	0.71	1.90	0.00	1.90
30	53.93	2.10	0.36	1.90	0.00	1.90
35	48.52	1.89	0.00	1.90	0.00	1.90
40	44.18	1.72	0.00	1.90	0.00	1.90
45	40.63	1.58	0.00	1.90	0.00	1.90
50	37.65	1.47	0.00	1.90	0.00	1.90
55	35.12	1.37	0.00	1.90	0.00	1.90
60	32.94	1.28	0.00	1.90	0.00	1.90
70	29.37	1.14	0.00	1.90	1.00	2.90
80	26.56	1.03	0.00	1.90	2.00	3.90
90	24.29	0.95	0.00	1.90	3.00	4.90
100	22.41	0.87	0.00	1.90	4.00	5.90
110	20.82	0.81	0.00	1.90	5.00	6.90
120	19.47	0.76	0.00	1.90	6.00	7.90

Summary of Roof Storage

Minimum Required Roof Storage (5 Year) =	1.29	m^3	
Proposed Head =	150	mm	*An Emergency overflow scupper is provided above this height.
Control Flow/Drain =	0.95	L/s	
Number of Roof Drains =	**2**		
Total Flow from Roof Drain =	1.90	L/s	
Available Roof Storage =	**25.44**	m^3	(20% reduction considered)
Roof Drain Model =	*WATTS Roof Drain- 1/4 Exposed Weir Opening*		

5 Year Post-development Stormwater Management (CA-02C Roof-Controlled)

Time (min)	Intensity (mm/hr)	Controlled Runoff (L/s)	Storage Volume (m^3)	Controlled Release Rate (L/s)	Uncontrolled Runoff (L/s)	Total Release Rate (L/s)
10	104.19	5.18	1.40	2.85	0.00	2.85
15	83.56	4.16	1.18	2.85	0.00	2.85
20	70.25	3.50	0.78	2.85	0.00	2.85
25	60.90	3.03	0.27	2.85	0.00	2.85
30	53.93	2.68	0.00	2.85	0.00	2.85
35	48.52	2.41	0.00	2.85	0.00	2.85
40	44.18	2.20	0.00	2.85	0.00	2.85
45	40.63	2.02	0.00	2.85	0.00	2.85
50	37.65	1.87	0.00	2.85	0.00	2.85
55	35.12	1.75	0.00	2.85	0.00	2.85
60	32.94	1.64	0.00	2.85	0.00	2.85
70	29.37	1.46	0.00	2.85	1.00	3.85
80	26.56	1.32	0.00	2.85	2.00	4.85
90	24.29	1.21	0.00	2.85	3.00	5.85
100	22.41	1.12	0.00	2.85	4.00	6.85
110	20.82	1.04	0.00	2.85	5.00	7.85
120	19.47	0.97	0.00	2.85	6.00	8.85

Summary of Roof Storage

Minimum Required Roof Storage (100 Year) =	1.40	m^3	
Proposed Head =	150	mm	*An Emergency overflow scupper is provided above this height.
Control Flow/Drain =	0.95	L/s	
Number of Roof Drains =	**3**		
Total Flow from Roof Drain =	2.85	L/s	
Available Roof Storage =	**25.44**	m^3	(20% reduction considered)
Roof Drain Model =	*WATTS Roof Drain- 1/4 Exposed Weir Opening*		

LRL
ENGINEERING | INGÉNIERIE

LRL File No. 230437
Project: 30 Cleary Avenue Odayanhaway Development
Location: 30 Cleary Ave., Ottawa, ON
Date: September 22, 2026
Designed: Sarthak Vora
Drawing Ref.: C701

Stormwater Management Design Sheet

5 Year Post-development Stormwater Management (CA-03A Roof-Controlled)

Time (min)	Intensity (mm/hr)	Controlled Runoff (L/s)	Storage Volume (m^3)	Controlled Release Rate (L/s)	Uncontrolled Runoff (L/s)	Total Release Rate (L/s)
10	104.19	6.81	2.94	1.90	0.00	1.90
15	83.56	5.46	3.20	1.90	0.00	1.90
20	70.25	4.59	3.23	1.90	0.00	1.90
25	60.90	3.98	3.12	1.90	0.00	1.90
30	53.93	3.52	2.92	1.90	0.00	1.90
35	48.52	3.17	2.67	1.90	0.00	1.90
40	44.18	2.89	2.37	1.90	0.00	1.90
45	40.63	2.65	2.04	1.90	0.00	1.90
50	37.65	2.46	1.68	1.90	0.00	1.90
55	35.12	2.29	1.30	1.90	0.00	1.90
60	32.94	2.15	0.91	1.90	0.00	1.90
70	29.37	1.92	0.08	1.90	1.00	2.90
80	26.56	1.74	0.00	1.90	2.00	3.90
90	24.29	1.59	0.00	1.90	3.00	4.90
100	22.41	1.46	0.00	1.90	4.00	5.90
110	20.82	1.36	0.00	1.90	5.00	6.90
120	19.47	1.27	0.00	1.90	6.00	7.90

Summary of Roof Storage

Minimum Required Roof Storage (100 Year) =	3.23	m^3	
Proposed Head =	150	mm	*An Emergency overflow scupper is provided above this height.
Control Flow/Drain =	0.95	L/s	
Number of Roof Drains =	**2**		
Total Flow from Roof Drain =	1.90	L/s	
Available Roof Storage =	**25.44**	m^3	(20% reduction considered)
Roof Drain Model =	*WATTS Roof Drain- 1/4 Exposed Weir Opening*		

5 Year Post-development Stormwater Management (CA-03B Roof-Controlled)

Time (min)	Intensity (mm/hr)	Controlled Runoff (L/s)	Storage Volume (m^3)	Controlled Release Rate (L/s)	Uncontrolled Runoff (L/s)	Total Release Rate (L/s)
10	104.19	21.87	7.99	8.55	0.00	8.55
15	83.56	17.54	8.09	8.55	0.00	8.55
20	70.25	14.75	7.43	8.55	0.00	8.55
25	60.90	12.78	6.35	8.55	0.00	8.55
30	53.93	11.32	4.98	8.55	0.00	8.55
35	48.52	10.18	3.43	8.55	0.00	8.55
40	44.18	9.27	1.74	8.55	0.00	8.55
45	40.63	8.53	0.00	8.55	0.00	8.55
50	37.65	7.90	0.00	8.55	0.00	8.55
55	35.12	7.37	0.00	8.55	0.00	8.55
60	32.94	6.91	0.00	8.55	0.00	8.55
70	29.37	6.16	0.00	8.55	1.00	9.55
80	26.56	5.58	0.00	8.55	2.00	10.55
90	24.29	5.10	0.00	8.55	3.00	11.55
100	22.41	4.70	0.00	8.55	4.00	12.55
110	20.82	4.37	0.00	8.55	5.00	13.55
120	19.47	4.09	0.00	8.55	6.00	14.55

Summary of Roof Storage

Minimum Required Roof Storage (100 Year) =	8.09	m^3	
Proposed Head =	150	mm	*An Emergency overflow scupper is provided above this height.
Control Flow/Drain =	0.95	L/s	
Number of Roof Drains =	**9**		
Total Flow from Roof Drain =	8.55	L/s	
Available Roof Storage =	**25.44**	m^3	(20% reduction considered)
Roof Drain Model =	*WATTS Roof Drain- 1/4 Exposed Weir Opening*		

LRL
ENGINEERING | INGÉNIERIE

LRL File No. 230437
Project: 30 Cleary Avenue Odayanhaway Development
Location: 30 Cleary Ave., Ottawa, ON
Date: September 22, 2026
Designed: Sarthak Vora
Drawing Ref.: C701

Stormwater Management Design Sheet

Runoff Equation

Q = 2.78CIA (L/s)
C = Runoff coefficient
I = Rainfall intensity (mm/hr) = $A / (Td + C)^B$
A = Area (ha)
T_c = Time of concentration (min)

Pre-development Stormwater Releasing towards NCC LANDS- 100 Year Storm (ECA 01,02A, 03A, 04)

100 year storm

$I_{100} = 1735.688 / (Td + 6.014)^{0.820}$ **a = 1735.688** **b = 0.820** **C = 6.014**

C =	0.50	max of 0.5 as per City of Ottawa
I =	178.6	mm/hr
Tc =	10	min
Total Area =	0.446	ha

Only the altered catchments (ECA 01B, 02A,03A, 04A are considered to determine the pre-development area.

Allowable Release Rate to NCC Lands= 110.78 L/s

Post-development Stormwater Management- 100 YEAR

Towards NCC Lands

		Area	ha	∑R=	$\sum R_{2\&5}$	$\sum R_{100}$
Roof- Controlled	CA-02A ROOF-CONTROLLED (Market Bldg)	0.046	ha	R=	0.90	1.00
	CA-02B ROOF-CONTROLLED (Market Bldg)	0.014	ha	R=	0.90	1.00
	CA-02C ROOF-CONTROLLED (Market Bldg)	0.018	ha	R=	0.90	1.00
	CA-03A ROOF-CONTROLLED (OAHS Bldg)	0.024	ha	R=	0.90	1.00
	CA-03B ROOF-CONTROLLED (OAHS Bldg)	0.076	ha	R=	0.90	1.00
	Total Roof- Controlled	**0.177**	**ha**	**∑R=**	**0.90**	**1.00**

100 Year Post-development Stormwater Management (CA-02A Roof-Controlled)

Time (min)	Intensity (mm/hr)	Controlled Runoff (L/s)	Storage Volume (m^3)	Controlled Release Rate (L/s)	Uncontrolled Runoff (L/s)	Total Release Rate (L/s)
10	178.56	22.73	11.93	2.85	0.00	2.85
15	142.89	18.19	13.81	2.85	0.00	2.85
20	119.95	15.27	14.91	2.85	0.00	2.85
25	103.85	13.22	15.56	2.85	0.00	2.85
30	91.87	11.70	15.92	2.85	0.00	2.85
35	82.58	10.51	16.09	2.85	0.00	2.85
40	75.15	9.57	16.12	2.85	0.00	2.85
45	69.05	8.79	16.04	2.85	0.00	2.85
50	63.95	8.14	15.88	2.85	0.00	2.85
55	59.62	7.59	15.65	2.85	0.00	2.85
60	55.89	7.12	15.36	2.85	0.00	2.85
70	49.79	6.34	14.66	2.85	1.00	3.85
80	44.99	5.73	13.82	2.85	2.00	4.85
90	41.11	5.23	12.88	2.85	3.00	5.85
100	37.90	4.83	11.86	2.85	4.00	6.85
110	35.20	4.48	10.77	2.85	5.00	7.85
120	32.89	4.19	9.64	2.85	6.00	8.85

Summary of Roof Storage

Minimum Required Roof Storage (100 Year) =	16.12	m^3
Proposed Head =	150	mm
Control Flow/Drain =	0.95	L/s
Number of Roof Drains =	**3**	
Total Flow from Roof Drain =	2.85	L/s
Available Roof Storage =	**23.60**	m^3
Roof Drain Model =	*WATTS Roof Drain- 1/4 Weir Opening Exposed*	

*An Emergency overflow scupper is provided above this height.

(20% reduction considered)

LRL
ENGINEERING | INGÉNIERIE

LRL File No. 230437
Project: 30 Cleary Avenue Odayanhaway Development
Location: 30 Cleary Ave., Ottawa, ON
Date: September 22, 2026
Designed: Sarthak Vora
Drawing Ref.: C701

Stormwater Management Design Sheet

100 Year Post-development Stormwater Management (CA-02B Roof-Controlled)

Time (min)	Intensity (mm/hr)	Controlled Runoff (L/s)	Storage Volume (m^3)	Controlled Release Rate (L/s)	Uncontrolled Runoff (L/s)	Total Release Rate (L/s)
10	178.56	6.95	3.03	1.90	0.00	1.90
15	142.89	5.56	3.30	1.90	0.00	1.90
20	119.95	4.67	3.32	1.90	0.00	1.90
25	103.85	4.04	3.21	1.90	0.00	1.90
30	91.87	3.58	3.02	1.90	0.00	1.90
35	82.58	3.21	2.76	1.90	0.00	1.90
40	75.15	2.92	2.46	1.90	0.00	1.90
45	69.05	2.69	2.13	1.90	0.00	1.90
50	63.95	2.49	1.77	1.90	0.00	1.90
55	59.62	2.32	1.39	1.90	0.00	1.90
60	55.89	2.18	0.99	1.90	0.00	1.90
70	49.79	1.94	0.16	1.90	1.00	2.90
80	44.99	1.75	0.00	1.90	2.00	3.90
90	41.11	1.60	0.00	1.90	3.00	4.90
100	37.90	1.48	0.00	1.90	4.00	5.90
110	35.20	1.37	0.00	1.90	5.00	6.90
120	32.89	1.28	0.00	1.90	6.00	7.90

Summary of Roof Storage

Minimum Required Roof Storage (100 Year) =	3.32	m^3	
Proposed Head =	150	mm	*An Emergency overflow scupper is provided above this height.
Control Flow/Drain =	0.95	L/s	
Number of Roof Drains =	**2**		
Total Flow from Roof Drain =	1.90	L/s	
Available Roof Storage =	**9.02**	m^3	(20% reduction considered)
Roof Drain Model =	*WATTS Roof Drain- 1/4 Weir Opening Exposed*		

100 Year Post-development Stormwater Management (CA-02C Roof-Controlled)

Time (min)	Intensity (mm/hr)	Controlled Runoff (L/s)	Storage Volume (m^3)	Controlled Release Rate (L/s)	Uncontrolled Runoff (L/s)	Total Release Rate (L/s)
10	178.56	8.89	3.62	2.85	0.00	2.85
15	142.89	7.11	3.83	2.85	0.00	2.85
20	119.95	5.97	3.74	2.85	0.00	2.85
25	103.85	5.17	3.48	2.85	0.00	2.85
30	91.87	4.57	3.10	2.85	0.00	2.85
35	82.58	4.11	2.64	2.85	0.00	2.85
40	75.15	3.74	2.13	2.85	0.00	2.85
45	69.05	3.44	1.58	2.85	0.00	2.85
50	63.95	3.18	1.00	2.85	0.00	2.85
55	59.62	2.97	0.39	2.85	0.00	2.85
60	55.89	2.78	0.00	2.85	0.00	2.85
70	49.79	2.48	0.00	2.85	1.00	3.85
80	44.99	2.24	0.00	2.85	2.00	4.85
90	41.11	2.05	0.00	2.85	3.00	5.85
100	37.90	1.89	0.00	2.85	4.00	6.85
110	35.20	1.75	0.00	2.85	5.00	7.85
120	32.89	1.64	0.00	2.85	6.00	8.85

Summary of Roof Storage

Minimum Required Roof Storage (100 Year) =	3.83	m^3	
Proposed Head =	150	mm	*An Emergency overflow scupper is provided above this height.
Control Flow/Drain =	0.95	L/s	
Number of Roof Drains =	**3**		
Total Flow from Roof Drain =	2.85	L/s	
Available Roof Storage =	**7.98**	m^3	(20% reduction considered)
Roof Drain Model =	*WATTS Roof Drain- 1/4 Weir Opening Exposed*		

LRL ENGINEERING | INGÉNIERIE

LRL File No. 230437
Project: 30 Cleary Avenue Odayanhaway Development
Location: 30 Cleary Ave., Ottawa, ON
Date: September 22, 2026
Designed: Sarthak Vora
Drawing Ref.: C701

Stormwater Management Design Sheet

100 Year Post-development Stormwater Management (CA-03A Roof-Controlled)

Time (min)	Intensity (mm/hr)	Controlled Runoff (L/s)	Storage Volume (m^3)	Controlled Release Rate (L/s)	Uncontrolled Runoff (L/s)	Total Release Rate (L/s)
10	178.56	11.67	5.86	1.90	0.00	1.90
15	142.89	9.34	6.69	1.90	0.00	1.90
20	119.95	7.84	7.12	1.90	0.00	1.90
25	103.85	6.78	7.33	1.90	0.00	1.90
30	91.87	6.00	7.38	1.90	0.00	1.90
35	82.58	5.39	7.34	1.90	0.00	1.90
40	75.15	4.91	7.22	1.90	0.00	1.90
45	69.05	4.51	7.05	1.90	0.00	1.90
50	63.95	4.18	6.83	1.90	0.00	1.90
55	59.62	3.90	6.58	1.90	0.00	1.90
60	55.89	3.65	6.31	1.90	0.00	1.90
70	49.79	3.25	5.68	1.90	1.00	2.90
80	44.99	2.94	4.99	1.90	2.00	3.90
90	41.11	2.69	4.24	1.90	3.00	4.90
100	37.90	2.48	3.46	1.90	4.00	5.90
110	35.20	2.30	2.64	1.90	5.00	6.90
120	32.89	2.15	1.79	1.90	6.00	7.90

Summary of Roof Storage

Minimum Required Roof Storage (100 Year) =	7.38	m^3	
Proposed Head =	150	mm	*An Emergency overflow scupper is provided above this height.
Control Flow/Drain =	0.95	L/s	
Number of Roof Drains =	**2**		
Total Flow from Roof Drain =	1.90	L/s	
Available Roof Storage =	**11.02**	m^3	(20% reduction considered)
Roof Drain Model =	*WATTS Roof Drain- 1/4 Weir Opening Exposed*		

100 Year Post-development Stormwater Management (CA-03B Roof-Controlled)

Time (min)	Intensity (mm/hr)	Controlled Runoff (L/s)	Storage Volume (m^3)	Controlled Release Rate (L/s)	Uncontrolled Runoff (L/s)	Total Release Rate (L/s)
10	178.56	37.48	17.36	8.55	0.00	8.55
15	142.89	29.99	19.30	8.55	0.00	8.55
20	119.95	25.18	19.95	8.55	0.00	8.55
25	103.85	21.80	19.87	8.55	0.00	8.55
30	91.87	19.28	19.32	8.55	0.00	8.55
35	82.58	17.33	18.44	8.55	0.00	8.55
40	75.15	15.77	17.33	8.55	0.00	8.55
45	69.05	14.49	16.05	8.55	0.00	8.55
50	63.95	13.42	14.62	8.55	0.00	8.55
55	59.62	12.51	13.08	8.55	0.00	8.55
60	55.89	11.73	11.45	8.55	0.00	8.55
70	49.79	10.45	7.98	8.55	1.00	9.55
80	44.99	9.44	4.29	8.55	2.00	10.55
90	41.11	8.63	0.43	8.55	3.00	11.55
100	37.90	7.96	0.00	8.55	4.00	12.55
110	35.20	7.39	0.00	8.55	5.00	13.55
120	32.89	6.90	0.00	8.55	6.00	14.55

Summary of Roof Storage

Minimum Required Roof Storage (100 Year) =	19.95	m^3	
Proposed Head =	150	mm	*An Emergency overflow scupper is provided above this height.
Control Flow/Drain =	0.95	L/s	
Number of Roof Drains =	**9**		
Total Flow from Roof Drain =	8.55	L/s	
Available Roof Storage =	**43.16**	m^3	(20% reduction considered)
Roof Drain Model =	*WATTS Roof Drain- 1/4 Weir Opening Exposed*		

CATCHMENT AREAS	DRAINAGE AREAS (ha)	100-YEAR RELEASE RATE	100-YEAR REQUIRED STORAGE (m3)	TOTAL AVAILABLE STORAGE (m3)	TOTAL AVAILABLE STORAGE- 20% red(m3)
CA-02A,02B,02C	0.078	7.60	23.28	40.60	32.48
CA-03A,03B	0.099	10.45	27.33	54.18	43.34
TOTAL	**0.177**	**18.05**	**50.61**	**94.78**	**75.82**

Roof Storage

Catchment	Roof Drain	Area (m2)	Height	Storage (m^3)	Storage (m^3)(20% red)	Req Storage (m^3)
CA-02A	A-1	457.50	0.075-0.15	23.60	18.88	16.12
	A-2					
	A-3					
CA-02B	A-4	140.10	0.12-0.15	9.02	7.22	3.32
	A-5					
	A-6	179.50	0.12-0.15	7.98	6.38	3.83
CA-02C	A-7					
	A-8					
			Total:	40.60		
				32.48	(20% reduction applied)	
			Req storage:	23.28		

LRL
ENGINEERING | INGÉNIERIE

LRL File No. 230437
Project: 30 Cleary Avenue Odayanhaway Development
Location: 30 Cleary Ave., Ottawa, ON
Date: September 22, 2026
Designed: Sarthak Vora
Drawing Ref.: C701

Stormwater Management Design Sheet

Roof Storage

Catchment	Roof Drain	Area (m2)	Height	Storage (m^3)	Storage (m^3) (20% red)	Req Storage (m^3)
CA-03A	B-1	235.4	0.08-0.15	11.02	8.82	7.38
	B-2					
CA-03B	B-3	114.76	0.08-0.15	34.62	34.53	19.95
	B-4	114.76				
	B-5	292.30				
	B-6					
	B-7	41.50	0.05-0.15	2.92		
	B-8					
	B-9	33.20	0.150	1.66		
	B-10	43.93	0.150	2.20		
	B-11	35.20	0.150	1.76		
			Total:	54.18		
				43.34 (20% reduction applied)		
			Req storage:	26.37		

LRL
ENGINEERING | INGÉNIERIE

LRL File No. 230437
Project: 30 Cleary Avenue Odayanhaway Development
Location: 30 Cleary Ave., Ottawa, ON
Date: September 22, 2026
Designed: Sarthak Vora
Drawing Ref.: C701

Stormwater Management Design Sheet

Runoff Equation

Q = 2.78CIA (L/s)
C = Runoff coefficient
I = Rainfall intensity (mm/hr) = $A / (Td + C)^B$
A = Area (ha)
T_c = Time of concentration (min)

Pre-development Stormwater Releasing towards NCC LANDS- 5 Year Storm (ECA 01,02A, 03A, 04)

5 year storm

$I5 = 998.071 / (Td + 6.053)^{0.814}$ **a = 998.071** **b = 0.814** **C = 6.053**

C =	0.50	max of 0.5 as per City of Ottawa
I =	104.2	mm/hr
Tc =	10	min
Total Area =	0.446	ha

Only the altered catchments (ECA 01B, 02A,03A, 04A are considered to determine the pre-development area.

Allowable Release Rate to NCC Lands= 64.64 L/s

Post-development Stormwater Management

Towards NCC Lands

		Area		∑R=	$\sum R_{2\&5}$
Controlled	CA-05A CONTROLLED (Front of Market)(NCC)	0.116	ha	R=	0.85
	CA-08 CONTROLLED (RAMP) (CISTERN)	0.013	ha	R=	0.90
	CA-02D (Market Bldg)	**0.022**	**ha**	**R=**	**0.90**
	Total ICD Controlled	**0.151**	**ha**	**∑R=**	**0.86**
	CA-02A ROOF-CONTROLLED (Market Bldg)	0.046	ha	R=	0.90
	CA-02B ROOF-CONTROLLED (Market Bldg)	0.014	ha	R=	0.90
	CA-02C ROOF-CONTROLLED (Market Bldg)	0.018	ha	R=	0.90
	CA-03A ROOF-CONTROLLED (OAHS Bldg)	0.024	ha	R=	0.90
	CA-03B ROOF-CONTROLLED (OAHS Bldg)	0.076	ha	R=	0.90
	Total Roof- Controlled	**0.177**	**ha**	**∑R=**	**0.90**
UnControlled	CA-01A UNCONTROLLED (NCC)	0.075	ha	R=	**0.39**
	CA-04 UN-CONTROLLED (Front of OAHS) (NCC)	0.032	ha	R=	**0.48**
	CA-05B UN-CONTROLLED (Front of Market)(NCC)	0.027	ha	R=	**0.35**
	Total UnControlled	**0.134**	**ha**	**∑R=**	**0.40**
Total		**0.461**	**ha**	**∑R=**	**0.74**

Post-development Stormwater Management (NCC Lands -Uncontrolled Catchment)

5 Year Storm Event:

$I_5 = 998.071 / (Td + 6.053)^{0.814}$ **a = 998.071** **b = 0.814** **C = 6.053**

Time (min)	Intensity (mm/hr)	Uncontrolled Runoff (L/s)	Controlled Release Rate Constant (L/s)	Total Release Rate (L/s)
10	104.2	15.68	0.00	15.68

Post-development Stormwater Management (CA-02D,05A & 08- CISTERN)

5 Year Storm Event:

$I_5 = 998.071 / (Td + 6.053)^{0.814}$ **a = 998.071** **b = 0.814** **C = 6.053**

		Storage Required				
Time (min)	Intensity (mm/hr)	Controlled Runoff (L/s)	Storage Volume (m^3)*	Controlled Release Rate Constant (L/s)	Uncontrolled Runoff (L/s)	Total Release Rate (L/s)
10	104.2	37.71	18.73	13.00	0.00	13.00
15	83.6	30.24	21.37	13.00	0.00	13.00
20	70.3	25.43	22.71	13.00	0.00	13.00
25	60.9	22.04	23.31	13.00	0.00	13.00
30	53.9	19.52	23.43	13.00	0.00	13.00
35	48.5	17.56	23.22	13.00	0.00	13.00
40	44.2	15.99	22.78	13.00	0.00	13.00
45	40.6	14.70	22.15	13.00	0.00	13.00
50	37.7	13.63	21.38	13.00	0.00	13.00
60	32.9	11.92	19.52	13.00	0.00	13.00
70	29.4	10.63	17.35	13.00	0.00	13.00
80	26.6	9.61	14.94	13.00	0.00	13.00
90	24.3	8.79	12.37	13.00	0.00	13.00
100	22.4	8.11	9.65	13.00	0.00	13.00
110	20.8	7.54	6.83	13.00	0.00	13.00
120	19.5	7.05	3.92	13.00	0.00	13.00

Total Storage Required = 23.43 m^3
Available Cistern Storage = 80.00 m^3

*50% of the Controlled Release Rate considered for underground storage calculations

All controlled areas will be directed to the underground cistern either through roof drains, area drains or landscape CB's.

LRL
ENGINEERING | INGÉNIERIE

LRL File No. 230437
Project: 30 Cleary Avenue Odayanhaway Development
Location: 30 Cleary Ave., Ottawa, ON
Date: September 22, 2026
Designed: Sarthak Vora
Drawing Ref.: C701

Stormwater Management Design Sheet

SUMMARY OF RELEASE RATES AND STORAGE VOLUMES				
CATCHMENT AREAS	**DRAINAGE AREAS (ha)**	**5-YEAR RELEASE RATE**	**5-YEAR REQUIRED STORAGE (m3)**	**TOTAL AVAILABLE STORAGE (m3)**
UNCONTROLLED CATCHMENTS	0.134	15.68	0.00	0.00
CA-02D,05A,08- CISTERN	0.046	13.00	23.43	80.00
CA- 02A,02B,02C,03A,03B-ROOF	0.177	18.05	21.37	94.78
TOTAL	**0.356**	**46.73**	**44.80**	**174.78**

LRL
ENGINEERING | INGÉNIERIE

LRL File No. 230437
Project: 30 Cleary Avenue Odayanhaway Development
Location: 30 Cleary Ave., Ottawa, ON
Date: September 22, 2026
Designed: Sarthak Vora
Drawing Ref.: C701

Stormwater Management Design Sheet

Runoff Equation

Q = 2.78CIA (L/s)
C = Runoff coefficient
I = Rainfall intensity (mm/hr) = $A / (Td + C)^B$
A = Area (ha)
T_c = Time of concentration (min)

Pre-development Stormwater Releasing towards NCC LANDS- 100 Year Storm (ECA 01B,02A, 03A, 04)

100 year storm

$I_{100} = 1735.688 / (Td + 6.014)^{0.820}$ **a = 1735.688** **b = 0.820** **C = 6.014**

C =	0.50	max of 0.5 as per City of Ottawa	
I =	178.6	mm/hr	
Tc =	10	min	
Total Area =	0.446	ha	Only the altered catchments (ECA 01B, 02A,03A, 04A) are considered to calculate the allowable release rate.

Allowable Release Rate to NCC Lands= 110.78 L/s

Post-development Stormwater Management: 100-YR

Towards NCC Lands

					$\sum R_{2\&5}$	$\sum R_{100}$
		Area	ha	**∑R=**		
Controlled	CA-05A CONTROLLED (Front of Market)(NCC)	0.116	ha	R=	0.85	1.00
	CA-08 CONTROLLED (RAMP) (CISTERN)	0.013	ha	R=	0.90	1.00
	CA-02D (Market Bldg)	0.022	ha	R=	0.90	1.00
	Total ICD Controlled	**0.151**	**ha**	**∑R=**	**0.86**	**1.00**
	CA-02A ROOF-CONTROLLED (Market Bldg)	0.046	ha	R=	0.90	1.00
	CA-02B ROOF-CONTROLLED (Market Bldg)	0.014	ha	R=	0.90	1.00
	CA-02C ROOF-CONTROLLED (Market Bldg)	0.018	ha	R=	0.90	1.00
	CA-03A ROOF-CONTROLLED (OAHS Bldg)	0.024	ha	R=	0.90	1.00
	CA-03B ROOF-CONTROLLED (OAHS Bldg)	0.076	ha	R=	0.90	1.00
	Total Roof- Controlled	**0.177**	**ha**	**∑R=**	**0.90**	**1.00**
UnControlled	CA-01A UNCONTROLLED (NCC)	0.075	ha	R=	**0.39**	0.49
	CA-04 UN-CONTROLLED (Front of OAHS) (NCC)	0.032	ha	R=	**0.48**	0.61
	CA-05B UN-CONTROLLED (Front of Market)(NCC)	0.027	ha	R=	**0.35**	0.44
	Total UnControlled	**0.134**	**ha**	**∑R=**	**0.40**	**0.51**
Total		**0.461**	**ha**	**∑R=**	**0.74**	**0.93**

Post-development Stormwater Management (TOTAL UNCONTROLLED)

100 Year Storm Event:

$I_{100} = 1735.688 / (Td + 6.014)^{0.820}$ **a = 1735.688** **b = 0.820** **C = 6.014**

Time (min)	Intensity (mm/hr)	Uncontrolled Runoff (L/s)	Controlled Release Rate Constant (L/s)	Total Release Rate (L/s)
10	178.6	33.59	0.00	33.59

Required Volume control for 10mm depth event as per NCC SWM Manual (m3): 46.101

Post-development Stormwater Management (CA-02D,05A & 08- CISTERN)

100 Year Storm Event:

$I_{100} = 1735.688 / (Td + 6.014)^{0.820}$ **a = 1735.688** **b = 0.820** **C = 6.014**

		Storage Required				
Time (min)	Intensity (mm/hr)	Controlled Runoff (L/s)	Storage Volume (m^3)*	Controlled Release Rate Constant (L/s)	Uncontrolled Runoff (L/s)	Total Release Rate (L/s)
10	178.6	74.76	40.96	13.00	0.00	13.00
15	142.9	59.83	47.99	13.00	0.00	13.00
20	120.0	50.22	52.47	13.00	0.00	13.00
25	103.8	43.48	55.47	13.00	0.00	13.00
30	91.9	38.46	57.53	13.00	0.00	13.00
35	82.6	34.57	58.96	13.00	0.00	13.00
40	75.1	31.46	59.91	13.00	0.00	13.00
45	69.1	28.91	60.51	13.00	0.00	13.00
50	64.0	26.78	60.83	13.00	0.00	13.00
60	55.9	23.40	60.85	13.00	0.00	13.00
70	49.8	20.85	60.25	13.00	0.00	13.00
80	45.0	18.84	59.21	13.00	0.00	13.00
90	41.1	17.21	57.84	13.00	0.00	13.00
100	37.9	15.87	56.21	13.00	0.00	13.00
110	35.2	14.74	54.37	13.00	0.00	13.00
120	32.9	13.77	52.36	13.00	0.00	13.00

Total Storage Required = 60.85 m^3
Available Cistern Storage = 80.00 m^3

*50% of the Controlled Release Rate considered for underground storage calculations

All controlled areas will be directed to the underground cistern either through roof drains, area drains or landscape CB's.

LRL
ENGINEERING | INGÉNIERIE

LRL File No. 230437
Project: 30 Cleary Avenue Odayanhaway Development
Location: 30 Cleary Ave., Ottawa, ON
Date: September 22, 2026
Designed: Sarthak Vora
Drawing Ref.: C701

Stormwater Management Design Sheet

SUMMARY OF RELEASE RATES AND STORAGE VOLUMES				
CATCHMENT AREAS	**DRAINAGE AREAS (ha)**	**100-YEAR RELEASE RATE**	**100-YEAR REQUIRED STORAGE (m3)**	**TOTAL AVAILABLE STORAGE (m3)**
UNCONTROLLED CATCHMENTS	0.134	33.59	0.00	0.00
CA-02D,05A,08- CISTERN	0.151	13.00	60.85	80.00
CA- 02A,02B,02C,03A,03B-ROOF	0.177	18.05	50.61	94.78
TOTAL	**0.461**	**64.64**	**111.46**	**174.78**

LRL Associates Ltd.

Storm Design Sheet

LRL
ENGINEERING | INGÉNIERIE

LRL File No. 230437
Project: 30 Cleary Avenue Odayanhaway Development
Location: 30 Cleary Ave., Ottawa, ON
Date: April 10, 2023
Designed: Sarthak Vora
Drawing Reference: C.401

Storm Design Parameters

Rational Method Q = 2.78CIA

Q = Peak flow in litres per second (L/s)
A = Drainage area in hectares (ha)
C = Runoff coefficient
I = Rainfall intensity (mm/hr)

Runoff Coefficient (C)

Grass	0.20
Gravel	0.70
Asphalt / rooftop	0.90

Ottawa Macdonald-Cartier International Airport IDF curve equation (10 year event, intensity in mm/hr)
I100 = 1735.688 / (Td + 6.014)0.820
Min. velocity = 0.80 m/s
Manning's "n" = 0.013

LOCATION			AREA (ha)			FLOW						STORM SEWER							
Watershed	From	To	C = 0.20	C = 0.80	C = 0.90	Indiv. 2.78AC	Accum. 2.78AC	Time of Conc. (min.)	Rainfall Intensity (mm/hr)	Peak Flow Q (L/s)	Controlled Flow Q (L/s)	Pipe Diameter (mm)	Type	Slope (%)	Length (m)	Capacity Full (L/s)	Velocity Full (m/s)	Time of Flow (min.)	Ratio (Q/Q_{FULL})
	BUILDING	ROOF OUTLET									18.05	200	PVC	1.00%	4.7	32.8	1.04	0.07	0.55
	BUILDING	CISTERN OUTLET									13.00	200	PVC	1.00%	3.0	32.8	1.04	0.05	0.40
	SYSTEM	CULVERT									31.05	250	PVC	2.29%	2.6	90.0	1.83	0.02	0.35
	851 Richmond	CBMH02									267.80	525	Conc	0.50%	61.5	304.1	1.40	0.73	0.88
	CBMH02	CBMH84									267.80	525	Conc	0.50%	38.5	304.1	1.40	0.46	0.88
	CBMH84	OUTFALL									267.80	525	Conc	0.50%	24.5	304.1	1.40	0.29	0.88

LRL
ENGINEERING | INGÉNIERIE

LRL File No. 230437
Project: 30 Cleary Avenue Odayanhaway Development
Location: 30 Cleary Ave., Ottawa, ON
Date: September 22, 2026
Designed: Sarthak Vora
Drawing Ref.: C701

Stormwater Management Design Sheet

Pipe Storage

Length (m)	Length (m)	dia. (m)	Storage (m^3)
CB08-CB09	31.5	0.200	0.99
CBMH09-CBMH1	20.70	0.000	0.00
CBMH1-CBMH2	24.50	0.500	4.81
CBMH2- CBMH3 (ICD)	13.90	0.500	2.73
		Total	**8.53**

Overland Storage Summary

Structure	Storage (m3)
CBMH 01A	7.45
CBMH2	23.4
Total	**30.85**

MH/CBMH Storage

CB/CBMH	Depth (m)	dia. (m)	Storage (m^3)
CB08	1.59	0.30	0.112
CBMH9	1.95	0.30	0.14
CBMH1	2.32	1.50	4.10
CBMH01A	1.71	0.60	0.48
CBMH01B	2.08	0.60	0.59
CBMH02	2.54	1.50	4.49
		Total	**9.91**

Summary of release Rates and Storage Volumes

100-year Release Rate (L/s)	100-Year Required Storage (m3)	Total Available Storage (m3)
18.80	65.10	49.30
18.80	**65.10**	**49.30**

Runoff Equation

Q = 2.78CIA (L/s)
C = Runoff coefficient
I = Rainfall intensity (mm/hr) = $A / (Td + C)^B$
A = Area (ha)
T_c = Time of concentration (min)

100 year storm

$I_{100} = 1735.688 / (Td + 6.014)^{0.820}$ **a = 1735.688** **b = 0.820** **6.014**

Allowable Release Rate to City= **18.80** L/s

Post-development Stormwater Management- 100 YEAR

Towards City

					∑R
		Area	ha	**∑R=**	
Areas	1.00	0.040	ha	R=	0.20
	2.00	0.020	ha	R=	0.90
	3.00	0.010	ha	R=	0.90
	4.00	0.030	ha	R=	0.20
	5.00	0.020	ha	R=	0.20
	6.00	0.040	ha	R=	1.00
	7.00	0.020	ha	R=	1.00
	8.00	0.040	ha	R=	0.90
	9.00	0.050	ha	R=	0.90
	10.00	0.020	ha	R=	0.20
	11.00	0.020	ha	R=	1.00
		0.310	**ha**	**∑R=**	**0.68**

LRL
ENGINEERING | INGÉNIERIE

LRL File No. 230437
Project: 30 Cleary Avenue Odayanhaway Development
Location: 30 Cleary Ave., Ottawa, ON
Date: September 22, 2026
Designed: Sarthak Vora
Drawing Ref.: C701

Stormwater Management Design Sheet

100 Year Post-development Stormwater Management

Time (min)	Intensity (mm/hr)	Controlled Runoff (L/s)	Storage Volume (m^3)	Controlled Release Rate (L/s)	Uncontrolled Runoff (L/s)	Total Release Rate (L/s)
10	178.56	104.24	51.26	18.81	0.00	18.81
15	142.89	83.42	58.15	18.81	0.00	18.81
20	119.95	70.03	61.46	18.81	0.00	18.81
25	103.85	60.63	62.72	18.81	0.00	18.81
30	91.87	53.63	62.68	18.81	0.00	18.81
35	82.58	48.21	61.74	18.81	0.00	18.81
40	75.15	43.87	60.14	18.81	0.00	18.81
45	69.05	40.31	58.05	18.81	0.00	18.81
50	63.95	37.34	55.58	18.81	0.00	18.81
55	59.62	34.81	52.79	18.81	0.00	18.81
60	55.89	32.63	49.76	18.81	0.00	18.81
70	49.79	29.07	43.08	18.81	1.00	19.81
80	44.99	26.27	35.79	18.81	2.00	20.81
90	41.11	24.00	28.03	18.81	3.00	21.81
100	37.90	22.13	19.91	18.81	4.00	22.81
110	35.20	20.55	11.49	18.81	5.00	23.81
120	32.89	19.20	2.84	18.81	6.00	24.81

Summary of Storage

Minimum Required Storage (100 Year) =	62.72	m^3
Proposed Head =	300	mm
Total Flow from icd =	18.81	L/s
Available Storage =	**69.40**	m^3

LRL
ENGINEERING | INGÉNIERIE

LRL File No. 230437
Project: 30 Cleary Avenue Odayanhaway Development
Location: 30 Cleary Ave., Ottawa, ON
Date: September 22, 2026
Designed: Clayton Powers
Drawing Ref.: C701

Stormwater Management Design Sheet

Pipe Storage

Length (m)	Length (m)	dia. (m)	Storage (m^3)
CB08-CB09	31.5	0.200	0.99
CBMH09-CBMH1	20.70	0.000	0.00
CBMH1-CBMH2	24.50	0.500	4.81
CBMH2- CBMH3 (ICD)	13.90	0.500	2.73
		Total	**8.53**

Overland Storage Summary

Structure	Storage (m3)
CBMH 01A	7.45
CBMH2	23.4
Total	**30.85**

MH/CBMH Storage

CB/CBMH	Depth (m)	dia. (m)	Storage (m^3)
CB08	1.59	0.30	0.112
CBMH9	1.95	0.30	0.14
CBMH1	2.32	1.50	4.10
CBMH01A	1.71	0.60	0.48
CBMH01B	2.08	0.60	0.59
CBMH02	2.54	1.50	4.49
		Total	**9.91**

Summary of release Rates and Storage Volumes

Release Rate (L/s)	5-Year Required Storage (m3)	Total Available Storage (m3)
18.80	65.10	49.30
18.80	**65.10**	**49.30**

Runoff Equation

Q = 2.78CIA (L/s)
C = Runoff coefficient
I = Rainfall intensity (mm/hr) $= A / (Td + C)^B$
A = Area (ha)
T_c = Time of concentration (min)

5 year storm

$I_{100} = 998.071 / (Td + 6.053)^{0.814}$ **a = 998.071** **b = 0.814** **6.053**

Allowable Release Rate to City= **18.80** L/s

Post-development Stormwater Management- 5 YEAR

Towards City

					∑R
		Area	ha	**∑R=**	
Areas	1.00	0.040	ha	R=	0.20
	2.00	0.020	ha	R=	0.90
	3.00	0.010	ha	R=	0.90
	4.00	0.030	ha	R=	0.20
	5.00	0.020	ha	R=	0.20
	6.00	0.040	ha	R=	1.00
	7.00	0.020	ha	R=	1.00
	8.00	0.040	ha	R=	0.90
	9.00	0.050	ha	R=	0.90
	10.00	0.020	ha	R=	0.20
	11.00	0.020	ha	R=	1.00
		0.310	**ha**	**∑R=**	**0.68**

LRL
ENGINEERING | INGÉNIERIE

LRL File No. 230437
Project: 30 Cleary Avenue Odayanhaway Development
Location: 30 Cleary Ave., Ottawa, ON
Date: September 22, 2026
Designed: Clayton Powers
Drawing Ref.: C701

Stormwater Management Design Sheet

5 Year Post-development Stormwater Management

Time (min)	Intensity (mm/hr)	Controlled Runoff (L/s)	Storage Volume (m^3)	Controlled Release Rate (L/s)	Uncontrolled Runoff (L/s)	Total Release Rate (L/s)
10	104.19	60.83	25.21	18.81	0.00	18.81
15	83.56	48.78	26.97	18.81	0.00	18.81
20	70.25	41.01	26.64	18.81	0.00	18.81
25	60.90	35.55	25.11	18.81	0.00	18.81
30	53.93	31.48	22.81	18.81	0.00	18.81
35	48.52	28.32	19.98	18.81	0.00	18.81
40	44.18	25.79	16.76	18.81	0.00	18.81
45	40.63	23.72	13.25	18.81	0.00	18.81
50	37.65	21.98	9.52	18.81	0.00	18.81
55	35.12	20.51	5.59	18.81	0.00	18.81
60	32.94	19.23	1.52	18.81	0.00	18.81
70	29.37	17.15	0.00	18.81	1.00	19.81
80	26.56	15.51	0.00	18.81	2.00	20.81
90	24.29	14.18	0.00	18.81	3.00	21.81
100	22.41	13.08	0.00	18.81	4.00	22.81
110	20.82	12.16	0.00	18.81	5.00	23.81
120	19.47	11.37	0.00	18.81	6.00	24.81

Summary of Storage

Minimum Required Storage Year =	26.97	m^3
Proposed Head =	150	mm
Total Flow from icd =	18.81	L/s
Available Storage =	**32.20**	m^3

LRL
ENGINEERING | INGÉNIERIE

LRL File No. 230437
Project: 30 Cleary Avenue Odayanhaway Development
Location: 30 Cleary Ave., Ottawa, ON
Date: September 22, 2026
Designed: Clayton Powers
Drawing Ref.: C701

Stormwater Management Design Sheet

Pipe Storage

Length (m)	Length (m)	dia. (m)	Storage (m^3)
CB08-CB09	31.5	0.200	0.99
CBMH09-CBMH1	20.70	0.000	0.00
CBMH1-CBMH2	24.50	0.500	4.81
CBMH2- CBMH3 (ICD)	13.90	0.500	2.73
		Total	**8.53**

Overland Storage Summary

Structure	Storage (m3)
CBMH 01A	7.45
CBMH2	23.4
Total	**30.85**

MH/CBMH Storage

CB/CBMH	Depth (m)	dia. (m)	Storage (m^3)
CB08	1.59	0.30	0.112
CBMH9	1.95	0.30	0.14
CBMH1	2.32	1.50	4.10
CBMH01A	1.71	0.60	0.48
CBMH01B	2.08	0.60	0.59
CBMH02	2.54	1.50	4.49
		Total	**9.91**

Summary of release Rates and Storage Volumes

Release Rate (L/s)	5-Year Required Storage (m3)	Total Available Storage (m3)
18.80	65.10	49.30
18.80	**65.10**	**49.30**

Runoff Equation

Q = 2.78CIA (L/s)
C = Runoff coefficient
I = Rainfall intensity (mm/hr) $= A / (Td + C)^B$
A = Area (ha)
T_c = Time of concentration (min)

2 year storm

$I_{100} = 732.951 / (Td + 6.199)^{0.810}$ **a = 732.951** **b = 0.810** **6.199**

Allowable Release Rate to City= **18.80** L/s

Post-development Stormwater Management- 2 YEAR

Towards City

					∑R
		Area	ha	**∑R=**	
Areas	1.00	0.040	ha	R=	0.20
	2.00	0.020	ha	R=	0.90
	3.00	0.010	ha	R=	0.90
	4.00	0.030	ha	R=	0.20
	5.00	0.020	ha	R=	0.20
	6.00	0.040	ha	R=	1.00
	7.00	0.020	ha	R=	1.00
	8.00	0.040	ha	R=	0.90
	9.00	0.050	ha	R=	0.90
	10.00	0.020	ha	R=	0.20
	11.00	0.020	ha	R=	1.00
		0.310	**ha**	**∑R=**	**0.68**

LRL
ENGINEERING | INGÉNIERIE

LRL File No. 230437
Project: 30 Cleary Avenue Odayanhaway Development
Location: 30 Cleary Ave., Ottawa, ON
Date: September 22, 2026
Designed: Clayton Powers
Drawing Ref.: C701

Stormwater Management Design Sheet

2 Year Post-development Stormwater Management

Time (min)	Intensity (mm/hr)	Controlled Runoff (L/s)	Storage Volume (m^3)	Controlled Release Rate (L/s)	Uncontrolled Runoff (L/s)	Total Release Rate (L/s)
10	76.81	44.84	15.62	18.81	0.00	18.81
15	61.77	36.06	15.52	18.81	0.00	18.81
20	52.03	30.38	13.88	18.81	0.00	18.81
25	45.17	26.37	11.34	18.81	0.00	18.81
30	40.04	23.38	8.22	18.81	0.00	18.81
35	36.06	21.05	4.71	18.81	0.00	18.81
40	32.86	19.19	0.90	18.81	0.00	18.81
45	30.24	17.65	0.00	18.81	0.00	18.81
50	28.04	16.37	0.00	18.81	0.00	18.81
55	26.17	15.28	0.00	18.81	0.00	18.81
60	24.56	14.34	0.00	18.81	0.00	18.81
70	21.91	12.79	0.00	18.81	1.00	19.81
80	19.83	11.58	0.00	18.81	2.00	20.81
90	18.14	10.59	0.00	18.81	3.00	21.81
100	16.75	9.78	0.00	18.81	4.00	22.81
110	15.57	9.09	0.00	18.81	5.00	23.81
120	14.56	8.50	0.00	18.81	6.00	24.81

Summary of Storage

Minimum Required Storage =	15.62	m^3
Proposed Head =	0	mm
Total Flow from icd =	18.81	L/s
Available Storage =	**32.20**	m^3

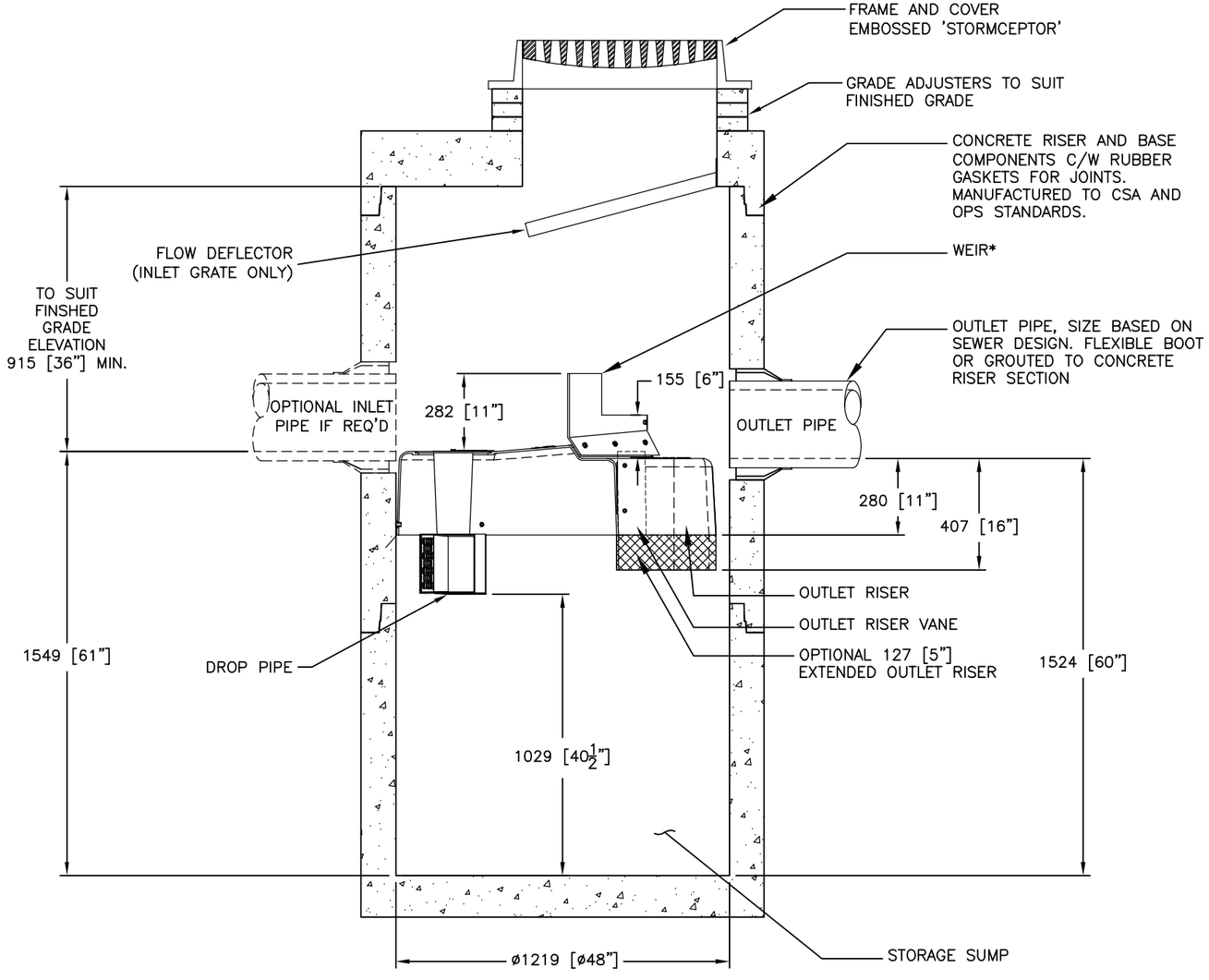

SECTION VIEW

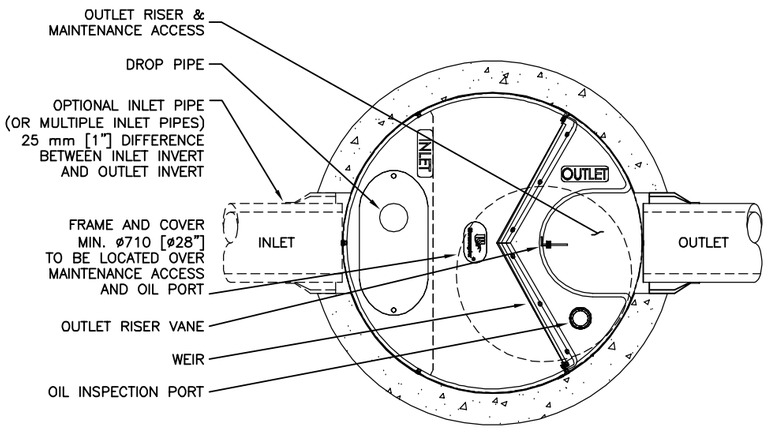

PLAN VIEW (STANDARD)

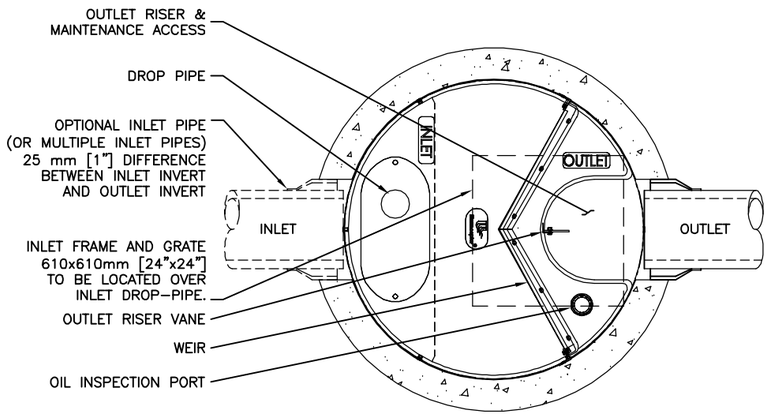

PLAN VIEW (INLET TOP)

FOR SITE SPECIFIC DRAWINGS PLEASE CONTACT YOUR LOCAL STORMCEPTOR REPRESENTATIVE. SITE SPECIFIC DRAWINGS ARE BASED ON THE BEST AVAILABLE INFORMATION AT THE TIME. SOME FIELD REVISIONS TO THE SYSTEM LOCATION OR CONNECTION PIPING MAY BE NECESSARY BASED ON AVAILABLE SPACE OR SITE CONFIGURATION REVISIONS. ELEVATIONS SHOULD BE MAINTAINED EXCEPT WHERE NOTED ON BYPASS STRUCTURE (IF REQUIRED).

GENERAL NOTES:

* MAXIMUM SURFACE LOADING RATE (SLR) INTO LOWER CHAMBER THROUGH DROP PIPE IS 1135 L/min/m^2 (27.9 gpm/ft^2) FOR STORMCEPTOR EF4 AND 535 L/min/m^2 (13.1 gpm/ft^2) FOR STORMCEPTOR EFO4 (OIL CAPTURE CONFIGURATION). WEIR HEIGHT IS 150 mm (6 INCH) FOR EF04.

1. ALL DIMENSIONS INDICATED ARE IN MILLIMETERS (INCHES) UNLESS OTHERWISE SPECIFIED.
2. STORMCEPTOR STRUCTURE INLET AND OUTLET PIPE SIZE AND ORIENTATION SHOWN FOR INFORMATIONAL PURPOSES ONLY.
3. UNLESS OTHERWISE NOTED, BYPASS INFRASTRUCTURE, SUCH AS ALL UPSTREAM DIVERSION STRUCTURES, CONNECTING STRUCTURES, OR PIPE CONDUITS CONNECTING TO COMPLETE THE STORMCEPTOR SYSTEM SHALL BE PROVIDED AND ADDRESSED SEPARATELY.
4. DRAWING FOR INFORMATION PURPOSES ONLY. REFER TO ENGINEER'S SITE/UTILITY PLAN FOR STRUCTURE ORIENTATION.
5. NO PRODUCT SUBSTITUTIONS SHALL BE ACCEPTED UNLESS SUBMITTED 10 DAYS PRIOR TO PROJECT BID DATE, OR AS DIRECTED BY THE ENGINEER OF RECORD.

INSTALLATION NOTES

A. ANY SUB-BASE, BACKFILL DEPTH, AND/OR ANTI-FLOTATION PROVISIONS ARE SITE-SPECIFIC DESIGN CONSIDERATIONS AND SHALL BE SPECIFIED BY ENGINEER OF RECORD.
B. CONTRACTOR TO PROVIDE EQUIPMENT WITH SUFFICIENT LIFTING AND REACH CAPACITY TO LIFT AND SET THE STRUCTURE (LIFTING CLUTCHES PROVIDED)
C. CONTRACTOR WILL INSTALL AND LEVEL THE STRUCTURE, SEALING THE JOINTS, LINE ENTRY AND EXIT POINTS (NON-SHRINK GROUT WITH APPROVED WATERSTOP OR FLEXIBLE BOOT)
D. CONTRACTOR TO TAKE APPROPRIATE MEASURES TO PROTECT THE DEVICE FROM CONSTRUCTION-RELATED EROSION RUNOFF.
E. DEVICE ACTIVATION, BY CONTRACTOR, SHALL OCCUR ONLY AFTER SITE HAS BEEN STABILIZED AND THE STORMCEPTOR UNIT IS CLEAN AND FREE OF DEBRIS.

STANDARD DETAIL
NOT FOR CONSTRUCTION

SITE SPECIFIC DATA REQUIREMENTS

STORMCEPTOR MODEL	EFO4				
STRUCTURE ID					*
HYDROCARBON STORAGE REQ'D (L)					*
WATER QUALITY FLOW RATE (L/s)					*
PEAK FLOW RATE (L/s)					*
RETURN PERIOD OF PEAK FLOW (yrs)					*
DRAINAGE AREA (HA)					*
DRAINAGE AREA IMPERVIOUSNESS (%)					*
PIPE DATA:	I.E.	MAT'L	DIA	SLOPE %	HGL
INLET #1	*	*	*	*	*
INLET #2	*	*	*	*	*
OUTLET	*	*	*	*	*

* PER ENGINEER OF RECORD

The design and information shown on this drawing is provided as a service to the project owner, engineer and contractor by Imbrium Systems ("Imbrium"). Neither this drawing, nor any part thereof, may be used, reproduced or modified in any manner without the prior written consent of Imbrium. Failure to comply is done at the user's own risk and Imbrium expressly disclaims any liability or responsibility for such use.

If discrepancies between the supplied information upon which this drawing is based and actual conditions are encountered, it is the responsibility of the user to inform Imbrium immediately for re-evaluation of the design. Imbrium accepts no liability for designs based on inaccurate, incomplete or inaccurate information supplied by others.

MARK	DATE	REVISION DESCRIPTION	BY
####	####	####	####
####	####	####	####
1	6/8/18	UPDATES	JSK
0	5/26/17	INITIAL RELEASE	JSK

Stormceptor® EF

SCALE = NTS

imbrium®
407 FAIRVIEW DRIVE, WHITBY, ON, L1N 9A9
TF 800-565-4501 CA 416-800-9000 INTL +1-416-800-9000

DATE: 10/13/2017

DESIGNED:	DRAWN:
JSK	JSK
CHECKED:	APPROVED:
BSF	SP
PROJECT No.:	SEQUENCE No.:
EFO4	*

SHEET: 1 OF 1

Stormceptor® EF Sizing Report

Imbrium® Systems
ESTIMATED NET ANNUAL SEDIMENT (TSS) LOAD REDUCTION

11/05/2025

Province:	Ontario
City:	Ottawa
Nearest Rainfall Station:	OTTAWA CDA RCS
Climate Station Id:	6105978
Years of Rainfall Data:	20

Site Name:	

Drainage Area (ha):	0.16
Runoff Coefficient 'c':	0.99

Particle Size Distribution:	Fine
Target TSS Removal (%):	80.0

Required Water Quality Runoff Volume Capture (%):	
Estimated Water Quality Flow Rate (L/s):	5.11
Oil / Fuel Spill Risk Site?	Yes
Upstream Flow Control?	Yes
Upstream Orifice Control Flow Rate to Stormceptor (L/s):	17.52
Peak Conveyance (maximum) Flow Rate (L/s):	
Influent TSS Concentration (mg/L):	100
Estimated Average Annual Sediment Load (kg/yr):	103
Estimated Average Annual Sediment Volume (L/yr):	84

Project Name:	30 Cleary Ave
Project Number:	230437
Designer Name:	Sarthak Vora
Designer Company:	LRL Associates
Designer Email:	svora@lrl.ca
Designer Phone:	613-915-7633
EOR Name:	
EOR Company:	
EOR Email:	
EOR Phone:	

Net Annual Sediment (TSS) Load Reduction Sizing Summary

Stormceptor Model	TSS Removal Provided (%)
EFO4	95
EFO5	97
EFO6	98
EFO8	100
EFO10	100
EFO12	100

Recommended Stormceptor EFO Model: EFO4

Estimated Net Annual Sediment (TSS) Load Reduction (%): 95

Water Quality Runoff Volume Capture (%): > 90

THIRD-PARTY TESTING AND VERIFICATION

►**Stormceptor® EF and Stormceptor® EFO** are the latest evolutions in the Stormceptor® oil-grit separator (OGS) technology series, and are designed to remove a wide variety of pollutants from stormwater and snowmelt runoff. These technologies have been third-party tested in accordance with the Canadian ETV **Procedure for Laboratory Testing of Oil-Grit Separators** and performance has been third-party verified in accordance with the **ISO 14034 Environmental Technology Verification (ETV)** protocol.

PERFORMANCE

►**Stormceptor® EF and EFO** remove stormwater pollutants through gravity separation and floatation, and feature a patent-pending design that generates positive removal of total suspended solids (TSS) throughout each storm event, including high-intensity storms. Captured pollutants include sediment, free oils, and sediment-bound pollutants such as nutrients, heavy metals, and petroleum hydrocarbons. Stormceptor is sized to remove a high level of TSS from the frequent rainfall events that contribute the vast majority of annual runoff volume and pollutant load. The technology incorporates an internal bypass to convey excessive stormwater flows from high-intensity storms through the device without resuspension and washout (scour) of previously captured pollutants. Proper routine maintenance ensures high pollutant removal performance and protection of downstream waterwavs.

PARTICLE SIZE DISTRIBUTION (PSD)

►The **Canadian ETV PSD** shown in the table below was used, or in part, for this sizing. This is the identical PSD that is referenced in the Canadian ETV ***Procedure for Laboratory Testing of Oil-Grit Separators*** for both sediment removal testing and scour testing. The Canadian ETV PSD contains a wide range of particle sizes in the sand and silt fractions, and is considered reasonably representative of the particle size fractions found in typical urban stormwater runoff.

Particle Size (µm)	Percent Less Than	Particle Size Fraction (µm)	Percent
1000	100	500-1000	5
500	95	250-500	5
250	90	150-250	15
150	75	100-150	15
100	60	75-100	10
75	50	50-75	5
50	45	20-50	10
20	35	8-20	15
8	20	5-8	10
5	10	2-5	5
2	5	<2	5

Upstream Flow Controlled Results

Rainfall Intensity (mm / hr)	Percent Rainfall Volume (%)	Cumulative Rainfall Volume (%)	Flow Rate (L/s)	Flow Rate (L/min)	Surface Loading Rate (L/min/m²)	Removal Efficiency (%)	Incremental Removal (%)	Cumulative Removal (%)
0.50	8.6	8.6	0.22	13.0	11.0	100	8.6	8.6
1.00	20.3	29.0	0.44	26.0	22.0	100	20.3	29.0
2.00	16.2	45.2	0.88	53.0	44.0	100	16.2	45.2
3.00	12.0	57.2	1.32	79.0	66.0	100	12.0	57.2
4.00	8.4	65.6	1.76	106.0	88.0	98	8.3	65.5
5.00	5.9	71.6	2.20	132.0	110.0	95	5.6	71.1
6.00	4.6	76.2	2.64	159.0	132.0	92	4.3	75.4
7.00	3.1	79.3	3.08	185.0	154.0	89	2.7	78.1
8.00	2.7	82.0	3.52	211.0	176.0	87	2.4	80.5
9.00	3.3	85.3	3.96	238.0	198.0	84	2.8	83.3
10.00	2.3	87.6	4.40	264.0	220.0	82	1.9	85.2
11.00	1.6	89.2	4.84	291.0	242.0	81	1.3	86.5
12.00	1.3	90.5	5.28	317.0	264.0	80	1.1	87.5
13.00	1.7	92.2	5.72	343.0	286.0	79	1.4	88.9
14.00	1.2	93.5	6.16	370.0	308.0	78	1.0	89.9
15.00	1.2	94.6	6.61	396.0	330.0	77	0.9	90.8
16.00	0.7	95.3	7.05	423.0	352.0	76	0.5	91.3
17.00	0.7	96.1	7.49	449.0	374.0	75	0.6	91.8
18.00	0.4	96.5	7.93	476.0	396.0	74	0.3	92.1
19.00	0.4	96.9	8.37	502.0	418.0	73	0.3	92.4
20.00	0.2	97.1	8.81	528.0	440.0	72	0.2	92.6
21.00	0.5	97.5	9.25	555.0	462.0	71	0.3	92.9
22.00	0.2	97.8	9.69	581.0	484.0	70	0.2	93.1
23.00	1.0	98.8	10.13	608.0	506.0	69	0.7	93.8
24.00	0.3	99.1	10.57	634.0	528.0	68	0.2	94.0
25.00	0.9	100.0	11.01	661.0	550.0	67	0.6	94.6
30.00	0.9	100.9	13.21	793.0	661.0	64	0.6	95.2
35.00	-0.9	100.0	15.41	925.0	771.0	63	N/A	94.6
40.00	0.0	100.0	17.61	1057.0	881.0	62	0.0	94.6
45.00	0.0	100.0	18.00	1080.0	900.0	62	0.0	94.6
Estimated Net Annual Sediment (TSS) Load Reduction =								**95 %**

Climate Station ID: 6105978 *Years of Rainfall Data*: 20

RAINFALL DATA FROM OTTAWA CDA RCS RAINFALL STATION

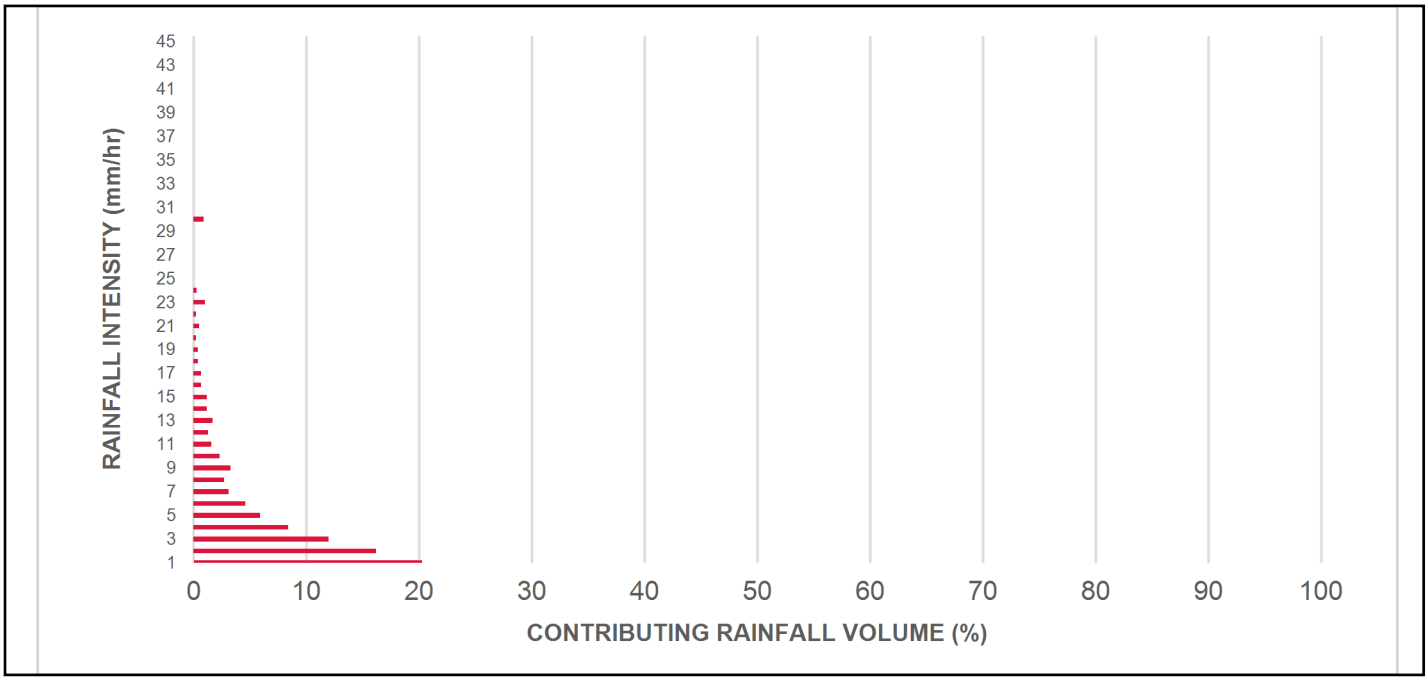

INCREMENTAL AND CUMULATIVE TSS REMOVAL FOR THE RECOMMENDED STORMCEPTOR® MODEL

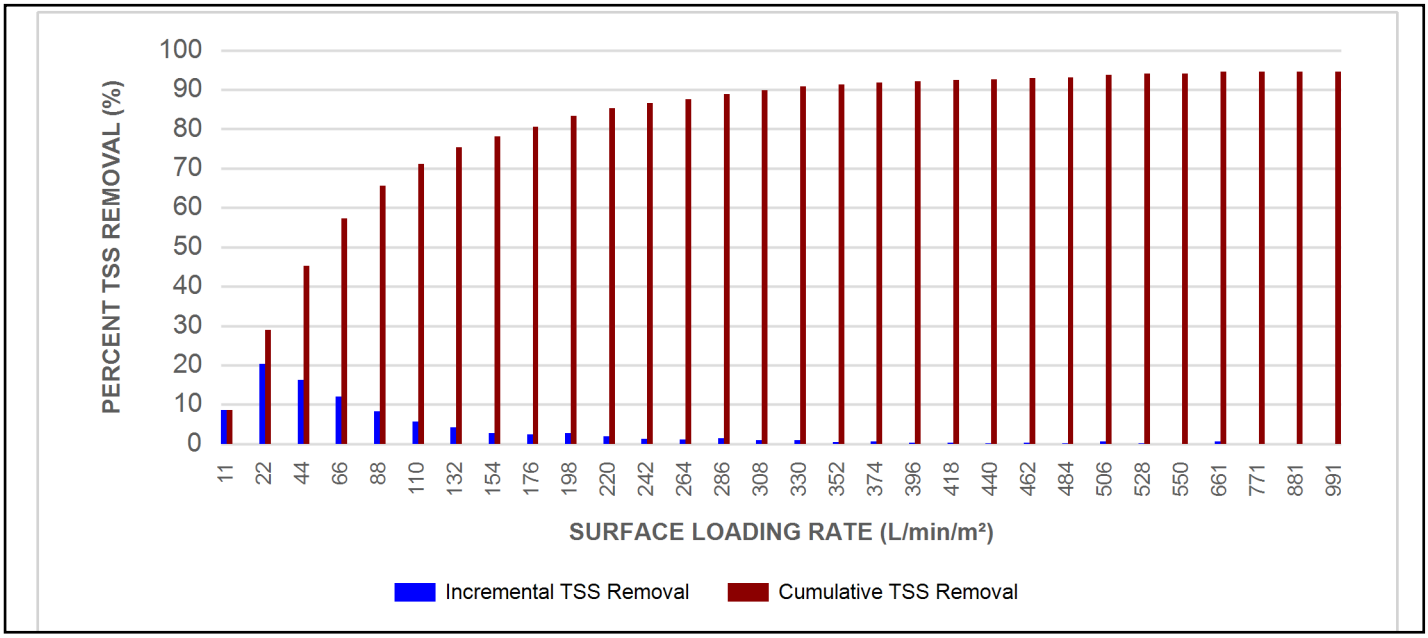

Maximum Pipe Diameter / Peak Conveyance

Stormceptor EF / EFO	Model Diameter		Min Angle Inlet / Outlet Pipes	Max Inlet Pipe Diameter		Max Outlet Pipe Diameter		Peak Conveyance Flow Rate	
	(m)	(ft)		(mm)	(in)	(mm)	(in)	(L/s)	(cfs)
EF4 / EFO4	1.2	4	90	609	24	609	24	425	15
EF5 / EFO5	1.5	5	90	762	30	762	30	710	25
EF6 / EFO6	1.8	6	90	914	36	914	36	990	35
EF8 / EFO8	2.4	8	90	1219	48	1219	48	1700	60
EF10 / EFO10	3.0	10	90	1828	72	1828	72	2830	100
EF12 / EFO12	3.6	12	90	1828	72	1828	72	2830	100

SCOUR PREVENTION AND ONLINE CONFIGURATION

►**Stormceptor® EF and EFO** feature an internal bypass and superior scour prevention technology that have been demonstrated in third-party testing according to the scour testing provisions of the Canadian ETV **Procedure for Laboratory Testing of Oil-Grit Separators**, and the exceptional scour test performance has been third-party verified in accordance with the ISO 14034 ETV protocol. As a result, Stormceptor EF and EFO are approved for online installation, eliminating the need for costly additional bypass structures, piping, and installation expense.

DESIGN FLEXIBILITY

►**Stormceptor® EF** and **EFO** offers design flexibility in one simplified platform, accepting stormwater flow from a single inlet pipe or multiple inlet pipes, and/or surface runoff through an inlet grate. The device can also serve as a junction structure, accommodate a 90-degree inlet-to-outlet bend angle, and can be modified to ensure performance in submerged conditions.

OIL CAPTURE AND RETENTION

►While Stormceptor® EF will capture and retain oil from dry weather spills and low intensity runoff, **Stormceptor® EFO** has demonstrated superior oil capture and greater than 99% oil retention in third-party testing according to the light liquid re-entrainment testing provisions of the Canadian ETV **Procedure for Laboratory Testing of Oil-Grit Separators**. Stormceptor EFO is recommended for sites where oil capture and retention is a requirement.

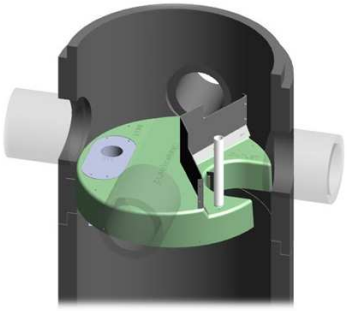

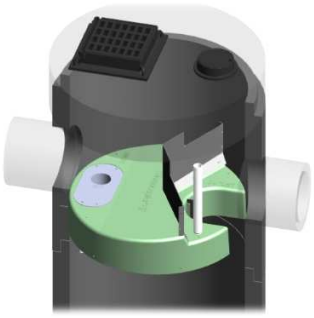

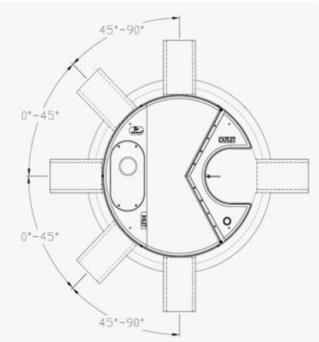

INLET-TO-OUTLET DROP

Elevation differential between inlet and outlet pipe inverts is dictated by the angle at which the inlet pipe(s) enters the unit.
0° - 45° : The inlet pipe is 1-inch (25mm) higher than the outlet pipe.
45° - 90° : The inlet pipe is 2-inches (50mm) higher than the outlet pipe.

HEAD LOSS

The head loss through Stormceptor EF is similar to that of a 60-degree bend structure. The applicable K value for calculating minor losses through the unit is 1.1. For submerged conditions the applicable K value is 3.0.

Pollutant Capacity

Stormceptor EF / EFO	Model Diameter		Depth (Outlet Pipe Invert to Sump Floor)		Oil Volume		Recommended Sediment Maintenance Depth *		Maximum Sediment Volume *		Maximum Sediment Mass **	
	(m)	(ft)	(m)	(ft)	(L)	(Gal)	(mm)	(in)	(L)	(ft^3)	(kg)	(lb)
EF4 / EFO4	1.2	4	1.52	5.0	265	70	203	8	1190	42	1904	5250
EF5 / EFO5	1.5	5	1.62	5.3	420	111	305	10	2124	75	2612	5758
EF6 / EFO6	1.8	6	1.93	6.3	610	160	305	12	3470	123	5552	15375
EF8 / EFO8	2.4	8	2.59	8.5	1070	280	610	24	8780	310	14048	38750
EF10 / EFO10	3.0	10	3.25	10.7	1670	440	610	24	17790	628	28464	78500
EF12 / EFO12	3.6	12	3.89	12.8	2475	655	610	24	31220	1103	49952	137875

*Increased sump depth may be added to increase sediment storage capacity
** Average density of wet packed sediment in sump = 1.6 kg/L (100 lb/ft^3)

Feature	Benefit	Feature Appeals To
Patent-pending enhanced flow treatment and scour prevention technology	Superior, verified third-party performance	Regulator, Specifying & Design Engineer
Third-party verified light liquid capture and retention for EFO version	Proven performance for fuel/oil hotspot locations	Regulator, Specifying & Design Engineer, Site Owner
Functions as bend, junction or inlet structure	Design flexibility	Specifying & Design Engineer
Minimal drop between inlet and outlet	Site installation ease	Contractor
Large diameter outlet riser for inspection and maintenance	Easy maintenance access from grade	Maintenance Contractor & Site Owner

STANDARD STORMCEPTOR EF/EFO DRAWINGS

For standard details, please visit http://www.imbriumsystems.com/stormwater-treatment-solutions/stormceptor-ef

STANDARD STORMCEPTOR EF/EFO SPECIFICATION

For specifications, please visit http://www.imbriumsystems.com/stormwater-treatment-solutions/stormceptor-ef

STANDARD PERFORMANCE SPECIFICATION FOR "OIL GRIT SEPARATOR" (OGS) STORMWATER QUALITY TREAMENT DEVICE

PART 1 – GENERAL

1.1 WORK INCLUDED

This section specifies requirements for selecting, sizing, and designing an underground Oil Grit Separator (OGS) device for stormwater quality treatment, with third-party testing results and a Statement of Verification in accordance with ISO 14034 Environmental Management – Environmental Technology Verification (ETV).

1.2 REFERENCE STANDARDS & PROCEDURES

ISO 14034:2016 Environmental management – Environmental technology verification (ETV)

Canadian Environmental Technology Verification (ETV) Program's **Procedure for Laboratory Testing of Oil-Grit Separators**

1.3 SUBMITTALS

1.3.1 All submittals, including sizing reports & shop drawings, shall be submitted upon request with each order to the contractor then forwarded to the Engineer of Record for review and acceptance. Shop drawings shall detail all OGS components, elevations, and sequence of construction.

1.3.2 Alternative devices shall have features identical to or greater than the specified device, including: treatment chamber diameter, treatment chamber wet volume, sediment storage volume, and oil storage volume.

1.3.3 Unless directed otherwise by the Engineer of Record, OGS stormwater quality treatment product substitutions or alternatives submitted within ten days prior to project bid shall not be accepted. All alternatives or substitutions submitted shall be signed and sealed by a local registered Professional Engineer, based on the exact same criteria detailed in Section 3, in entirety, subject to review and approval by the Engineer of Record.

PART 2 – PRODUCTS

2.1 OGS POLLUTANT STORAGE

The OGS device shall include a sump for sediment storage, and a protected volume for the capture and storage of petroleum hydrocarbons and buoyant gross pollutants. The minimum sediment & petroleum hydrocarbon storage capacity shall be as follows:

2.1.1	4 ft (1219 mm) Diameter OGS Units:	1.19 m^3 sediment / 265 L oil
	5 ft (1524 mm) Diameter OGS Units:	1.95 m^3 sediment / 420 L oil
	6 ft (1829 mm) Diameter OGS Units:	3.48 m^3 sediment / 609 L oil
	8 ft (2438 mm) Diameter OGS Units:	8.78 m^3 sediment / 1,071 L oil
	10 ft (3048 mm) Diameter OGS Units:	17.78 m^3 sediment / 1,673 L oil
	12 ft (3657 mm) Diameter OGS Units:	31.23 m^3 sediment / 2,476 L oil

PART 3 – PERFORMANCE & DESIGN

3.1 GENERAL

The OGS stormwater quality treatment device shall be verified in accordance with ISO 14034:2016 Environmental management – Environmental technology verification (ETV). The OGS stormwater quality treatment device shall remove oil, sediment and gross pollutants from stormwater runoff during frequent wet weather events, and retain these pollutants during less frequent high flow wet weather events below the insert within the OGS for later removal during maintenance. The Manufacturer shall have at least ten (10) years of local experience, history and success in engineering design, manufacturing and production and supply of OGS stormwater quality treatment device systems, acceptable to the Engineer of Record.

3.2 SIZING METHODOLOGY

The OGS device shall be engineered, designed and sized to provide stormwater quality treatment based on treating a minimum of 90 percent of the average annual runoff volume and a minimum removal of an annual average 60% of the sediment (TSS) load based on the Particle Size Distribution (PSD) specified in the sizing report for the specified device. Sizing of the OGS shall be determined by use of a minimum ten (10) years of local historical rainfall data provided by Environment Canada. Sizing shall also be determined by use of the sediment removal performance data derived from the ISO 14034 ETV third-party verified laboratory testing data from testing conducted in accordance with the Canadian ETV protocol Procedure for Laboratory Testing of Oil-Grit Separators, as follows:

3.2.1 Sediment removal efficiency for a given surface loading rate and its associated flow rate shall be based on sediment removal efficiency demonstrated at the seven (7) tested surface loading rates specified in the protocol, ranging 40 L/min/m^2 to 1400 L/min/m^2, and as stated in the ISO 14034 ETV Verification Statement for the OGS device.

3.2.2 Sediment removal efficiency for surface loading rates between 40 L/min/m^2 and 1400 L/min/m^2 shall be based on linear interpolation of data between consecutive tested surface loading rates.

3.2.3 Sediment removal efficiency for surface loading rates less than the lowest tested surface loading rate of 40 L/min/m^2 shall be assumed to be identical to the sediment removal efficiency at 40 L/min/m^2. No extrapolation shall be allowed that results in a sediment removal efficiency that is greater than that demonstrated at 40 L/min/m^2.

3.2.4 Sediment removal efficiency for surface loading rates greater than the highest tested surface loading rate of 1400 L/min/m^2 shall assume zero sediment removal for the portion of flow that exceeds 1400 L/min/m^2, and shall be calculated using a simple proportioning formula, with 1400 L/min/m^2 in the numerator and the higher surface loading rate in the denominator, and multiplying the resulting fraction times the sediment removal efficiency at 1400 L/min/m^2.

The OGS device shall also have sufficient annual sediment storage capacity as specified and calculated in Section 2.1.

3.3 CANADIAN ETV or ISO 14034 ETV VERIFICATION OF SCOUR TESTING

The OGS device shall have Canadian ETV or ISO 14034 ETV Verification of third-party scour testing conducted in accordance with the Canadian ETV Program's **Procedure for Laboratory Testing of Oil-Grit Separators.**

3.3.1 To be acceptable for on-line installation, the OGS device must demonstrate an average scour test effluent concentration less than 10 mg/L at each surface loading rate tested, up to and including 2600 L/min/m^2.

3.4 LIGHT LIQUID RE-ENTRAINMENT SIMULATION TESTING

The OGS device shall have Canadian ETV or ISO 14034 ETV Verification of completed third-party Light Liquid

Re-entrainment Simulation Testing in accordance with the Canadian ETV **Program's Procedure for Laboratory Testing of Oil-Grit Separators,** with results reported within the Canadian ETV or ISO 14034 ETV verification. This re-entrainment testing is conducted with the device pre-loaded with low density polyethylene (LDPE) plastic beads as a surrogate for light liquids such as oil and fuel. Testing is conducted on the same OGS unit tested for sediment removal to assess whether light liquids captured after a spill are effectively retained at high flow rates.

3.4.1 For an OGS device to be an acceptable stormwater treatment device on a site where vehicular traffic occurs and the potential for an oil or fuel spill exists, the OGS device must have reported verified performance results of greater than 99% cumulative retention of LDPE plastic beads for the five specified surface loading rates (ranging 200 L/min/m^2 to 2600 L/min/m^2) in accordance with the Light Liquid Re-entrainment Simulation Testing within the Canadian ETV Program's **Procedure for Laboratory Testing of Oil-Grit Separators.** However, an OGS device shall not be allowed if the Light Liquid Re-entrainment Simulation Testing was performed with screening components within the OGS device that are effective at retaining the LDPE plastic beads, but would not be expected to retain light liquids such as oil and fuel.

WATTS®	Adjustable Accutrol Weir Tag: _____	Adjustable Flow Control for Roof Drains

ADJUSTABLE ACCUTROL (for Large Sump Roof Drains only)

For more flexibility in controlling flow with heads deeper than 2", Watts Drainage offers the Adjustable Accutrol. The Adjustable Accutrol Weir is designed with a single parabolic opening that can be covered to restrict flow above 2" of head to less than 5 gpm per inch, up to 6" of head. To adjust the flow rate for depths over 2" of head, set the slot in the adjustable upper cone according to the flow rate required. Refer to Table 1 below.
Note: Flow rates are directly proportional to the amount of weir opening that is exposed.

EXAMPLE:

For example, if the adjustable upper cone is set to cover 1/2 of the weir opening, flow rates above 2"of head will be restricted to 2-1/2 gpm per inch of head.

Therefore, at 3"of head, the flow rate through the Accutrol Weir that has 1/2 the slot exposed will be:
[5 gpm (per inch of head) x 2 inches of head] + 2-1/2 gpm (for the third inch of head) = 12-1/2 gpm.

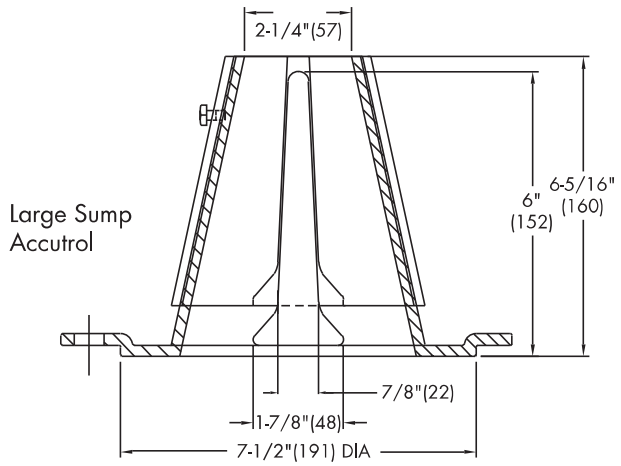

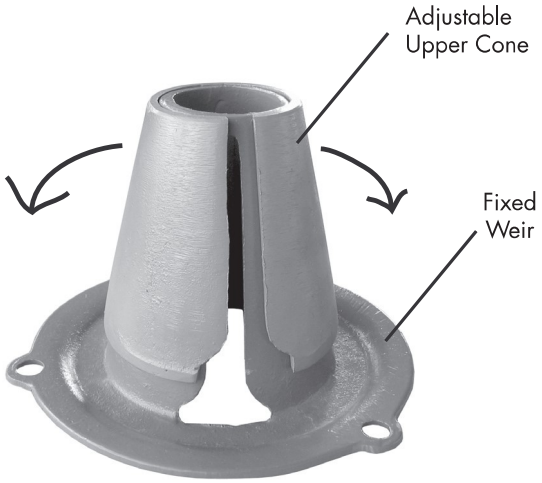

1/2 Weir Opening Exposed Shown Above

TABLE 1. Adjustable Accutrol Flow Rate Settings

Weir Opening Exposed	1"	2"	3"	4"	5"	6"
	Flow Rate (gallons per minute)					
Fully Exposed	5	10	15	20	25	30
3/4	5	10	13.75	17.5	21.25	25
1/2	5	10	12.5	15	17.5	20
1/4	5	10	11.25	12.5	13.75	15
Closed	5	5	5	5	5	5

Job Name _____ Contractor _____

Job Location _____ Contractor's P.O. No. _____

Engineer _____ Representative _____

Watts product specifications in U.S. customary units and metric are approximate and are provided for reference only. For precise measurements, please contact Watts Technical Service. Watts reserves the right to change or modify product design, construction, specifications, or materials without prior notice and without incurring any obligation to make such changes and modifications on Watts products previously or subsequently sold.

USA: Tel: (800) 338-2581 • Fax: (828) 248-3929 • Watts.com
Canada: Tel: (905) 332-4090 • Fax: (905) 332-7068 • Watts.ca
Latin America: Tel: (52) 81-1001-8600 • Fax: (52) 81-8000-7091 • Watts.com

WATTS®
A Watts Water Technologies Company

© 2016 Watts

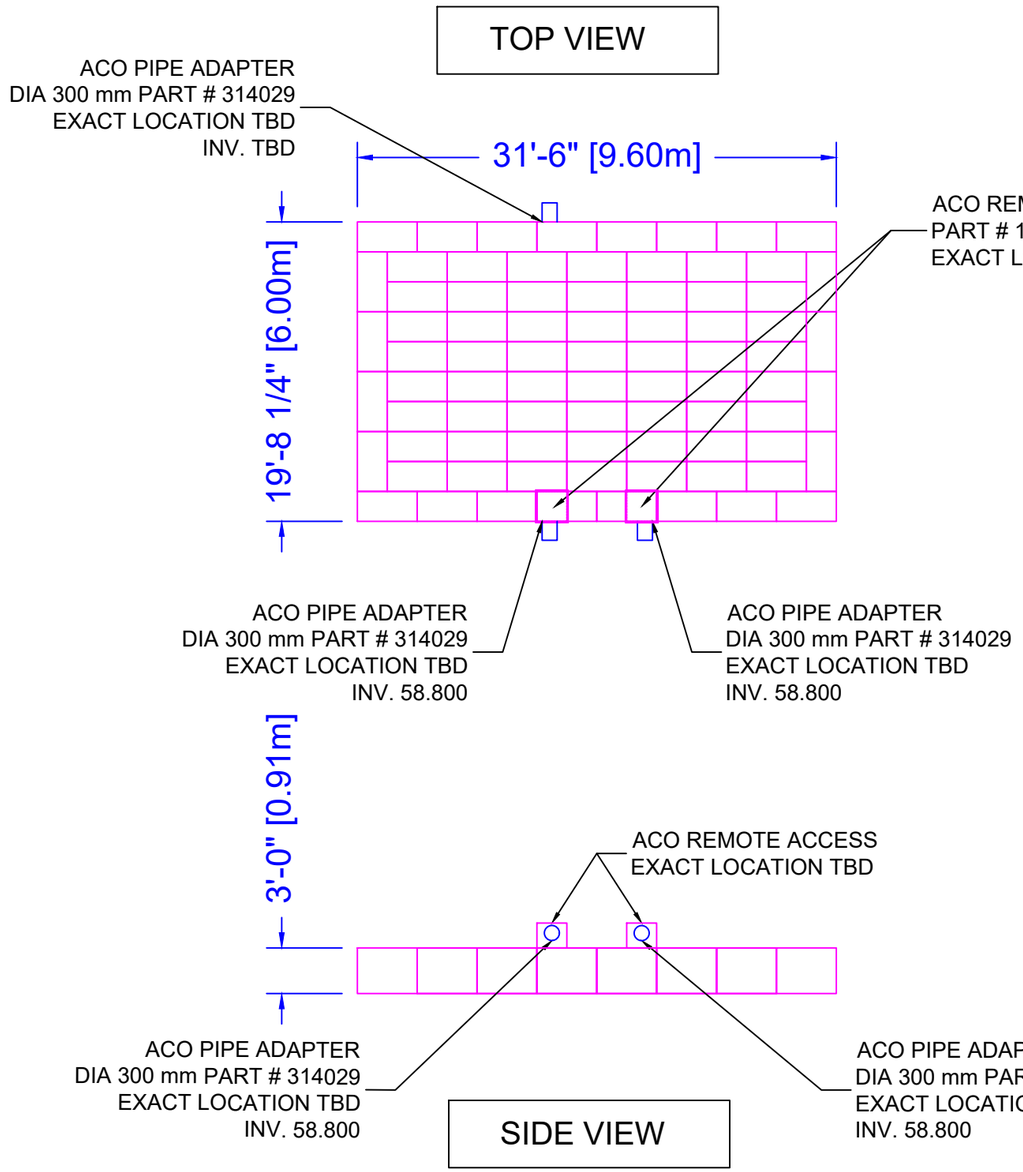

Tank 1 Configuration - SD

Tank Function	Infiltration
Product	ACO Stormbrixx [1][2] SD
Number of Layer(s)	1.0
Tank Height (m)	0.91
Tank Footprint (m^2)	57.60
Tank Gross Volume (m^3)	52.65
Tank Net Volume (m^3)	51.07
Estimated Backfill Volume (m^3)	29.10
Backfill Type	Native ϕ 28°
Traffic Load Expected	Light
Elevations	
Top of backfill	59.121
Top of tank	58.514
Tank Invert	57.600
Bottom of base layer	57.450
Finished Ground Highest Elevation	59.900
Finished Ground Lowest Elevation	59.600
Maximum Ground Water Elevation	REFER NOTE 3

NOTES :

[1] Design Life of ACO Stormbrixx SD is 50 years.

[2] ACO Stormbrixx SD can meet AASHTO H-20 and HS-20 loading conditions.

[3] Maximum Ground Water Elevation is assumed to be below invert of the tank at all times for structural analysis.

WARNING: VEHICLE TRAFFIC DURING CONSTRUCTION STAGE SHALL NOT BE ALOWED ON TOP OF THE TANK

WARNING: GROUNDWATER MAY CAUSE TANK FLOTATION. THIS RISK EXISTS EVEN WITH STRUCTURALLY SOUND TANKS, AS GEOTECHNICAL DATA MAY NOT REFLECT MAXIMUM WATER LEVELS.

PROJECT NAME		
30 CLEARY AVENUE, OTTAWA - ON-SB		
SYSTEM(S) - SD		
DATE - 23-10-25	CHECKED BY - ----	
SHEET NO. 1 of 3	DESIGN SERV. NO. 925-684	REV. B

STORMBRIXX LAYOUT

NO.	REVISIONS DESCRIPTION	DATE	BY
A	INSTALLATION DETAILS REVISED	29-10-25	MD
B	INLET/OUTLET PIPE POSITION REVISED	30-10-25	KP
C	----	----	----
D	----	----	----
E	----	----	----

ACO SYSTEMS LTD.
2910 BRIGHTON RD
OAKVILLE, ON
L6H 5S3
TEL: (905)-829-0665
FAX: (905)-829-2908
EMAIL: info@acocan.ca
WEB: www.acocan.ca

CANADA

DRAWN BY - MD

EMAIL - MOHAMMED.SADRIWALA@ACO.COM

1 LAYER STORMBRIXX SD
Infiltration
TYPICAL SECTION PROFILE

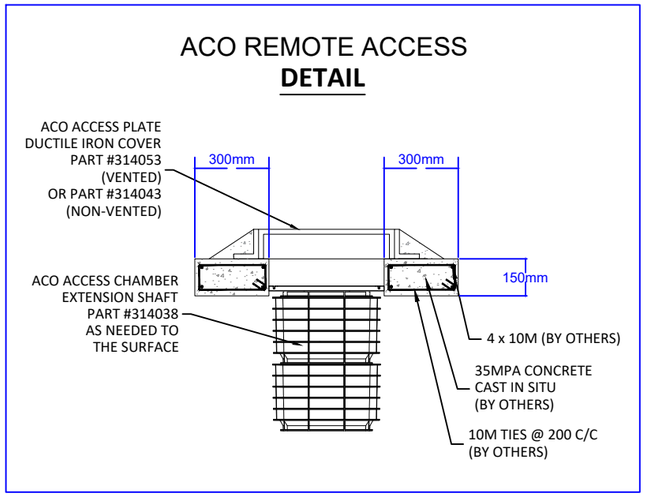

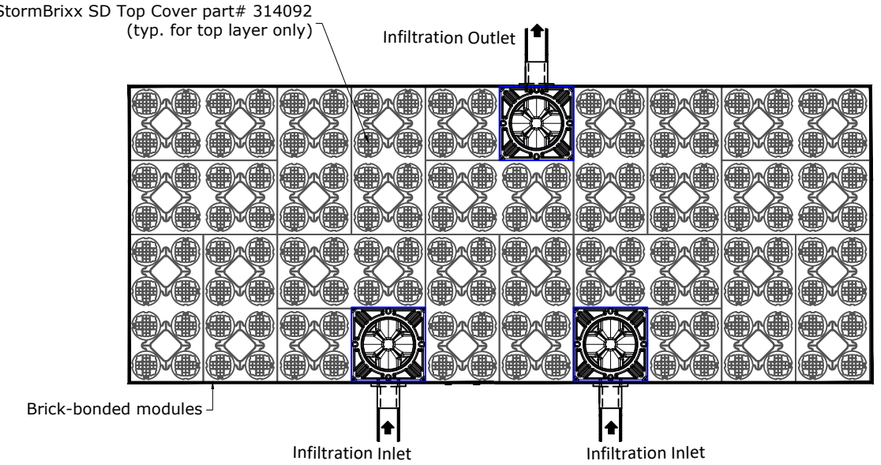

PLAN

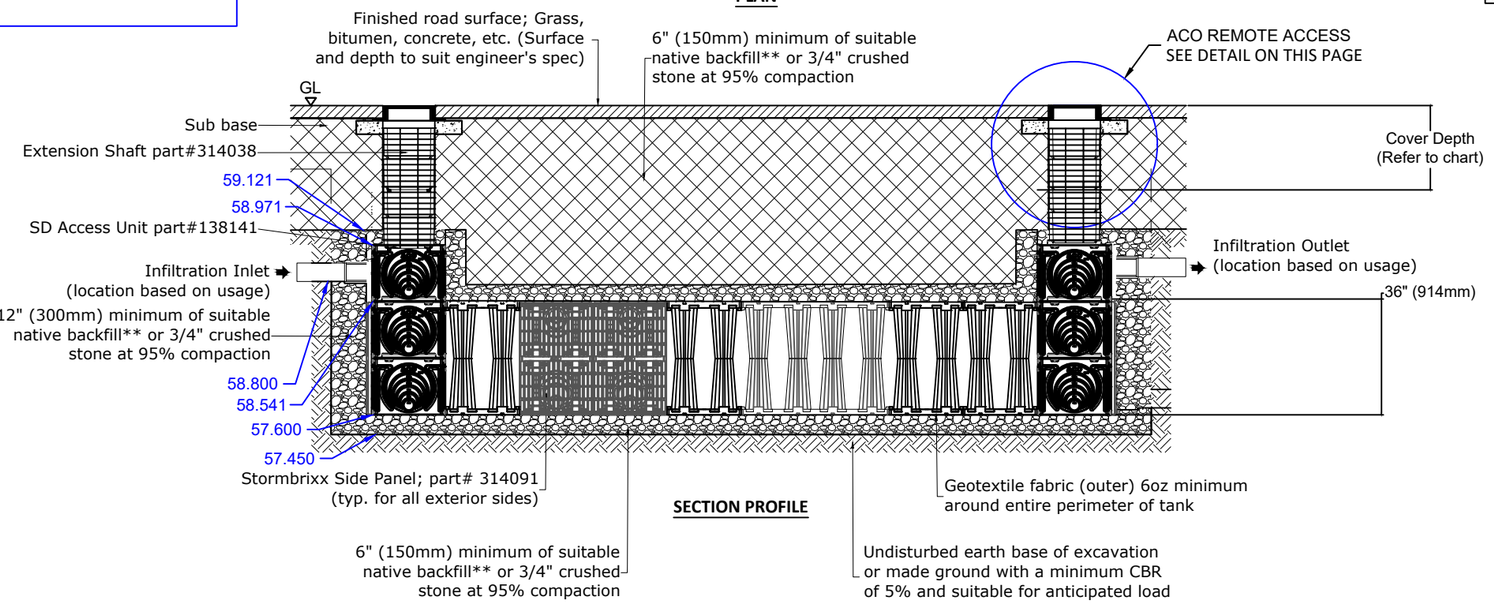

SECTION PROFILE

Installation depths of ACO StormBrixx SD	
Installation Location	Minimum cover depth[4] ft (m)
Non-trafficked areas i.e. landscaping [2]	1.65 (0.5)
Parking lots, vehicles up to 5,512lbs gross mass [1]	1.8 (0.55)
Parking lots, occasional vehicles greater than 5,512lbs gross mass [3]	2.0 (0.6)
Occasional heavy truck traffic up to HS-20 loading	Please consult with ACO
Maximum cover depth of ACO StormBrixx SD	6.5 (2)
Maximum depth to invert of ACO StormBrixx SD two layer system	12.56 (3.8)

Notes

(1) Assumes 27 degree load distribution through fill material and overlaying surface asphalt or block paving

(2) Minimum cover depth to avoid accidental damage from gardening/landscaping work

(3) Occasional sanitation trucks or similar vehicles (typically one per week)

(4) Please check minimum frost cover depths and water table heights for geographical location

ACO StormBrixx SD Module
48"x24"x36" [1200x602.5x914mm (H)]
22.54cuft net volume per completed module
Brick or Cross Bonded (where applicable)
part# 314090

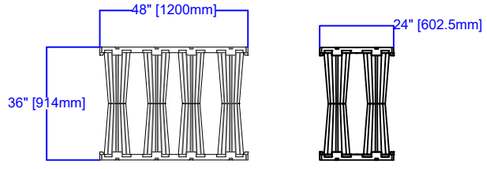

*All systems must be designed and installed to meet or exceed ACO StormBrixx minimum requirements. Although ACO StormBrixx offers support during the design, review, and construction phases of the module system, it is the ultimate responsibility of the Engineer of Record to design the system in full compliance with all applicable engineering practices, laws, and regulations.

**Native soil must be free of organic material and have minimum angle friction of 28 degrees.

WARNING: VEHICLE TRAFFIC DURING CONSTRUCTION STAGE SHALL NOT BE ALOWED ON TOP OF THE TANK

WARNING: GROUNDWATER MAY CAUSE TANK FLOTATION. THIS RISK EXISTS EVEN WITH STRUCTURALLY SOUND TANKS, AS GEOTECHNICAL DATA MAY NOT REFLECT MAXIMUM WATER LEVELS.

PROJECT NAME 30 CLEARY AVENUE, OTTAWA - ON-SB		
SYSTEM(S) - SD		
DATE - 23-10-25	CHECKED BY - ----	
SHEET NO. 2 of 3	DESIGN SERV. NO. 925-684	REV. B

STORMBRIXX LAYOUT

NO.	REVISIONS DESCRIPTION	DATE	BY
A	INSTALLATION DETAILS REVISED	29-10-25	MD
B	INLET/OUTLET PIPE POSITION REVISED	30-10-25	KP
C	----	----	----
D	----	----	----
E	----	----	----

ACO SYSTEMS LTD.
2910 BRIGHTON RD
OAKVILLE, ON
L6H 5S3
TEL: (905)-829-0665
FAX: (905)-829-2908
EMAIL: info@acocan.ca
WEB: www.acocan.ca

CANADA

DRAWN BY - MD	EMAIL - MOHAMMED.SADRIWALA@ACO.COM

Brick-bonding structures

Triple module unit



Quadruple module unit



Completing a brick-bonded structure

To finish the brick-bonded tank, one module will need to be cut in half in certain layouts. The images below detail and display the ease of creating the final piece.







LAYER CONNECTORS

When assembling multiple layers of ACO StormBrixx SD, the layers are aligned and secured by means of two layer connectors clicked together. The exact positions of the modules and layer connectors within the overall infiltration system are shown in the installation diagram.

The layer connectors must each be mounted in the top of the module and positioned into the molded socket next to the column on the edge of the module.

Multiple layers

Connectors are used if two or more layers of ACO StormBrixx SD are installed: **Two individual layer connectors** are pushed together to form one and are inserted between the individual layers as positional fixing. This helps achieve precise alignment of the columns within several layers.

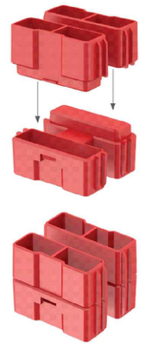

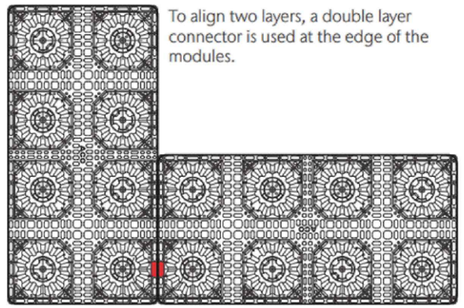

To align two layers, a double layer connector is used at the edge of the modules.

GENERAL NOTES

1. IT IS THE CUSTOMER'S RESPONSIBILITY TO ENSURE THAT EACH PRODUCT IS FIT FOR ITS INTENDED PURPOSE AND THAT THE ACTUAL CONDITIONS ARE SUITABLE.
2. IT IS THE CUSTOMER'S RESPONSIBILITY TO FOLLOW ACO SYSTEMS LTD. INSTALLATION INSTRUCTIONS FOR EACH PRODUCT. SEEK ENGINEERING ADVICE FOR INSTALLATIONS NOT ILLUSTRATED IN THE INSTALLATION GUIDELINES.
3. FOR FURTHER PRODUCT INFORMATION, CUT SHEETS, SPECIFICATIONS AND INSTALLATION INSTRUCTIONS, PLEASE VISIT US AT OUR WEBSITE: WWW.ACOCAN.CA.
4. IS HIGHLY RECOMMENDED TO USE A GRIT INTERCEPTOR BEFORE THE WATER ENTERS THE TANK, TO AVOID DEBRIS ACCUMULATION IN THE UNIT AND ENSURE ITS DURABLE PERFORMANCE.

ALL DRAWINGS ARE AS ACCURATE AS THE INFORMATION SUPPLIED. ALL REASONABLE CARE HAS BEEN TAKEN IN COMPILING THE INFORMATION WITHIN. PLEASE REVIEW THIS INFORMATION FOR ACCURACY.

☐ APPROVED ☐ REVISE AND RESUBMIT
☐ APPROVED AS NOTED ☐ REJECTED

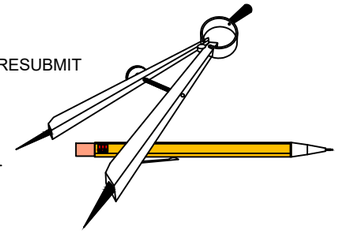

SIGNED: _____

DATE: _____

COMMENTS:

WARNING: VEHICLE TRAFFIC DURING CONSTRUCTION STAGE SHALL NOT BE ALOWED ON TOP OF THE TANK

WARNING: GROUNDWATER MAY CAUSE TANK FLOTATION. THIS RISK EXISTS EVEN WITH STRUCTURALLY SOUND TANKS, AS GEOTECHNICAL DATA MAY NOT REFLECT MAXIMUM WATER LEVELS.

PROJECT NAME 30 CLEARY AVENUE, OTTAWA - ON-SB		
SYSTEM(S) - SD		
DATE - 23-10-25	CHECKED BY - ----	
SHEET NO. 3 of 3	DESIGN SERV. NO. 925-684	REV. B

STORMBRIXX LAYOUT

NO.	REVISIONS DESCRIPTION	DATE	BY
A	INSTALLATION DETAILS REVISED	29-10-25	MD
B	INLET/OUTLET PIPE POSITION REVISED	30-10-25	KP
C	----	----	----
D	----	----	----
E	----	----	----

ACO SYSTEMS LTD.
2910 BRIGHTON RD
OAKVILLE, ON
L6H 5S3
TEL: (905)-829-0665
FAX: (905)-829-2908
EMAIL: info@acocan.ca
WEB: www.acocan.ca

CANADA

ACO

CANADIAN

DRAWN BY - MD

EMAIL - MOHAMMED.SADRIWALA@ACO.COM

APPENDIX G

Civil Engineering Drawings

30 CLEARY AVENUE ODAYANHAWAY DEVELOPMENT

30 CLEARY AVENUE, OTTAWA

REVISION 03



KEY PLAN (N.T.S.)

DRAWING INDEX	
TITLE PAGE	
SEDIMENT AND EROSION CONTROL PLAN	C101
GRADING AND DRAINAGE PLAN	C301
SERVICING PLAN	C401
SERVICING PLAN- SECONDARY WATER	C402
PLAN AND PROFILE PROP WATER SERVICE STA. 0+000 TO 0+166	C501
PLAN AND PROFILE PROP WATER SERVICE STA. 0+165 TO 0+252	C502
STORMWATER MANAGEMENT PLAN	C601
PRE-DEVELOPMENT WATERSHED PLAN	C701
POST-DEVELOPMENT WATERSHED PLAN	C702
CONSTRUCTION DETAIL PLAN	C901
CONSTRUCTION DETAIL PLAN	C902

LRL
ENGINEERING | INGÉNIERIE
5430 Canotek Road | Ottawa, ON, K1J 9G2
www.lrl.ca | (613) 842-3434

30 CLEARY AVENUE ODAYANHAWAY DEVELOPMENT
30 CLEARY AVENUE, OTTAWA
REV.03 - ISSUED FOR APPROVAL - OCTOBER 2026
LRL PROJECT no: 230437

LICENSED PROFESSIONAL ENGINEER
V. JOHNSON
100510576
10-14-2026
PROVINCE OF ONTARIO

NOT AUTHENTIC UNLESS SIGNED AND DATED

GENERAL NOTES

1. ALL WORKS MATERIALS SHALL CONFIRM TO THE LAST REVISION OF THE STANDARDS AND SPECIFICATIONS FOR THE CITY OF OTTAWA, ONTARIO PROVINCIAL STANDARD DRAWINGS (OPSD) AND SPECIFICATIONS (OPSS), WHERE APPLICABLE. LOCAL UTILITY STANDARDS AND MINISTRY OF TRANSPORTATION STANDARDS WILL APPLY WHERE REQUIRED.
2. THE CONTRACTORS SHALL CONFIRM THE LOCATION OF ALL EXISTING UTILITIES WITHIN THE SITE AND ADJACENT WORK AREAS. THE CONTRACTORS SHALL BE RESPONSIBLE FOR PROTECTING ALL EXISTING UTILITIES TO THE SATISFACTION OF THE AUTHORITY HAVING JURISDICTION. THE CONTRACTOR SHALL BE RESPONSIBLE FOR THE REPAIR OR REPLACEMENT OF ANY SERVICES OR UTILITIES DISTURBED DURING CONSTRUCTION , TO THE SATISFACTION OF THE AUTHORITY HAVING JURISDICTION.
3. ALL DIMENSIONS SHALL BE CHECKED AND VERIFIED IN THE FIELD BY THE CONTRACTOR PRIOR TO THE START OF CONSTRUCTION, ANY DISCREPANCIES SHALL BE REPORTED IMMEDIATELY TO THE ENGINEER. LOST TIME DUE TO FAILURE OF THE CONTRACTORS TO CONFIRM UTILITY LOCATIONS AND NOTIFY ENGINEER OF POSSIBLE CONFLICTS PRIOR TO CONSTRUCTION WILL BE AT CONTRACTORS EXPENSE.
4. ANY AREA BEYOND THE LIMIT OF THE SITE DISTURBED DURING CONSTRUCTION SHALL BE RESTORED TO ORIGINAL CONDITION OR BETTER TO THE SATISFACTION OF THE AUTHORITY HAVING JURISDICTION AT THE CONTRACTOR'S EXPENSE. RELOCATING OF EXISTING SERVICES AND/OR UTILITIES SHALL BE AS SHOWN ON THE DRAWINGS OR DETECTED BY THE ENGINEER AT THE EXPENSE OF DEVELOPERS.
5. ALL WORK SHALL BE COMPLETED IN ACCORDANCE WITH THE 'OCCUPATIONAL HEALTH AND SAFETY ACT AND REGULATIONS FOR CONSTRUCTION PROJECTS'. THE GENERAL CONTRACTORS SHALL BE DEEMED TO BE THE 'CONTRACTOR' AS DEFINED IN THE ACT.
6. ALL THE CONSTRUCTION SIGNAGE MUST CONFIRM TO THE MINISTRY OF TRANSPORTATION OF ONTARIO MANUAL OF UNIFORM TRAFFIC CONTROL DEVICES PER LATEST AMENDMENT.
7. THE CONTRACTOR IS ADVISED THAT WORKS BY OTHERS MAY BE ONGOING DURING THE PERIOD OF THE CONTRACT. THE CONTRACTOR SHALL COORDINATE CONSTRUCTION ACTIVITIES TO PREVENT CONFLICTS.
8. ALL DIMENSIONS ARE IN METERS UNLESS SPECIFIED OTHERWISE.
9. THERE WILL BE NO SUBSTITUTION OF MATERIALS UNLESS PRIOR WRITTEN APPROVAL IS RECEIVED FROM THE ENGINEER.
10. ALL CONSTRUCTION SHALL BE CARRIED OUT IN ACCORDANCE WITH THE RECOMMENDATIONS MADE IN THE GEOTECHNICAL REPORT.
11. FOR DETAILS RELATING TO STORMWATER MANAGEMENT AND ROOF DRAINAGE REFER TO THE SITE SERVICING AND STORMWATER MANAGEMENT REPORT.
12. ALL SEWERS CONSTRUCTED WITH GRADES LESS THAN 1.0% SHALL BE INSTALLED USING LASER ALIGNMENT AND CHECKED WITH LEVEL INSTRUMENT PRIOR TO BACKFILLING.
13. THE CONTRACTOR IS RESPONSIBLE FOR OBTAINING ALL PERMITS REQUIRED AND TO BEAR THE COST OF THE SAME.
14. THE CONTRACTOR SHALL BE RESPONSIBLE FOR ADDITIONAL BEDDING, OR ADDITIONAL STRENGTH PIPE IF THE MAXIMUM TRENCH WIDTH AS SPECIFIED BY OPSD IS EXCEEDED.
15. ALL PIPE/CULVERT SECTION SIZES REFER TO INSIDE DIMENSIONS.
16. SHOULD DEEPLY BURIED ARCHAEOLOGICAL REMAINS BE FOUND ON THE PROPERTY DURING CONSTRUCTION ACTIVITIES, THE HERITAGE OPERATIONS UNIT OF THE ONTARIO MINISTRY OF CULTURE MUST BE NOTIFIED IMMEDIATELY.
17. ALL NECESSARY CLEARING AND GRUBBING SHALL BE COMPLETED BY THE CONTRACTOR. REVIEW WITH CONTRACT ADMINISTRATOR AND THE CITY OF OTTAWA PRIOR TO ANY TREE CUTTING/REMOVAL.
18. DRAWINGS SHALL BE READ ON CONJUNCTION WITH ARCHITECTURAL SITE PLAN.
19. THE CONTRACTOR SHALL PROVIDE THE PROJECT ENGINEER ON SET OF AS CONSTRUCTED SITE SERVICING AND GRADING DRAWINGS.
20. BENCHMARKS: IT IS THE RESPONSIBILITY OF THE CONTRACTOR TO VERIFY THAT THE SITE BENCHMARK(S) HAS NOT BEEN ALTERED OR DISTURBED AND THAT ITS RELATIVE ELEVATION AND DESCRIPTION AGREES WITH THE INFORMATION DEPICTED ON THIS PLAN.

EROSION AND SEDIMENT CONTROL NOTES

GENERAL

THE CONTRACTOR SHALL IMPLEMENT BEST MANAGEMENT PRACTICES, TO PROVIDE FOR PROTECTION OF THE AREA DRAINAGE SYSTEM AND THE RECEIVING WATERCOURSE, DURING CONSTRUCTION ACTIVITIES. THE CONTRACTOR ACKNOWLEDGES THAT FAILURE TO IMPLEMENT APPROPRIATE EROSION AND SEDIMENT CONTROL MEASURES MAY BE SUBJECT TO PENALTIES IMPOSED BY ANY APPLICABLE REGULATORY AGENCY.

THE CONTRACTOR ACKNOWLEDGES THAT SURFACE EROSION AND SEDIMENT RUNOFF RESULTING FROM THEIR CONSTRUCTION OPERATIONS HAS POTENTIAL TO CAUSE A DETRIMENTAL IMPACT TO ANY DOWNSTREAM WATERCOURSE OR SEWER, AND THAT ALL CONSTRUCTION OPERATIONS THAT MAY IMPACT UPON WATER QUALITY SHALL BE CARRIED OUT IN MANNER THAT STRICTLY MEETS THE REQUIREMENT OF ALL APPLICABLE LEGISLATION AND REGULATIONS.

AS SUCH, THE CONTRACTOR SHALL BE RESPONSIBLE FOR CARRYING OUT THEIR OPERATIONS, AND SUPPLYING AND INSTALLING ANY APPROPRIATE CONTROL MEASURES, SO AS TO PREVENT SEDIMENT LADEN RUNOFF ENTERING ANY SEWER OR WATERCOURSE WITHIN OR DOWNSTREAM OF THE WORKING AREA.

THE CONTRACTOR ACKNOWLEDGES THAT NO ONE MEASURE IS LIKELY TO BE 100% EFFECTIVELY FOR EROSION PROTECTION AND CONTROLLING SEDIMENT RUNOFF AND DISCHARGES FROM THE SITE. THEREFORE, WHERE NECESSARY THE CONTRACTOR SHALL IMPLEMENT ADDITIONAL MEASURES ARRANGED IN SUCH MANNER AS TO MITIGATE SEDIMENT RELEASE FROM THE CONSTRUCTION OPERATIONS AND ACHIEVE SPECIFIC MAXIMUM PERMITTED CRITERIA WHERE APPLICABLE. SUGGESTED ON-SITE MEASURES MAY INCLUDE, BUT SHALL NOT BE LIMITED TO, THE FOLLOWING METHODS: SEDIMENT PONDS, FILTER BAGS, PUMP FILTERS, SETTLING TANKS, SILT FENCE, STRAW BALES, FILTER CLOTHS, CATCH BASIN FILTERS, CHECK DAMS AND/OR OTHER RECOGNIZED TECHNOLOGIES AND METHOD AVAILABLE AT THE TIME OF CONSTRUCTION. SPECIFIC MEASURES SHALL BE INSTALLED IN ACCORDANCE WITH REQUIREMENTS OF OPSS 577 WHERE APPROPRIATE, OR IN ACCORDANCE WITH MANUFACTURER'S RECOMMENDATIONS.

WHERE, IN THE OPINION OF THE CONTRACT ADMINISTRATOR OR REGULATORY AGENCY, THE INSTALLED CONTROL MEASURES FAIL TO PERFORM ADEQUATELY, THE CONTRACTOR SHALL SUPPLY AND INSTALL ADDITIONAL OR ALTERNATIVE MEASURES AS DIRECTED BY THE CONTRACT ADMINISTRATOR OR REGULATORY AGENCY, AS SUCH, THE CONTRACTOR SHALL HAVE ADDITIONAL CONTROL MATERIALS ON SITE AT ALL TIME WHICH ARE EASILY ACCESSIBLE AND MAY BE IMPLEMENTED BY HIM AT THE MOMENT'S NOTICE.

PRIOR TO COMMENCING WORK, THE CONTRACTOR SHALL SUBMIT TO THE CONTRACT ADMINISTRATOR SIX COPIES OF A DETAILED EROSION AND SEDIMENT CONTROL PLAN (ESCP). THE ESCP WILL CONSIST OF WRITTEN DESCRIPTION AND DETAILED DRAWINGS INDICATING THE ON-SITE ACTIVITIES AND MEASURES TO BE USED TO CONTROL EROSION AND SEDIMENT MOVEMENT FOR EACH STEP OF THE WORK.

CONTRACTOR'S RESPONSIBILITIES

THE CONTRACTOR SHALL ENSURE THAT ALL WORKERS, INCLUDING SUB-CONTRACTOR, IN THE WORKING ARE ARE AWARE OF THE IMPORTANCE OF THE EROSION AND SEDIMENT CONTROL MEASURES AND INFORMED OF THE CONSEQUENCES OF THE FAILURE TO COMPLY WITH THE REQUIREMENTS OF ALL REGULATORY AGENCIES.

THE CONTRACTOR SHALL PERIODICALLY, AND WHEN REQUESTED BY THE CONTRACT ADMINISTRATOR, CLEAN OUT ACCUMULATED SEDIMENT DEPOSITS AS REQUIRED AT THE SEDIMENT CONTROL DEVICES, INCLUDING THOSE DEPOSITS THAT MAY ORIGINATE FROM OUTSIDE THE CONSTRUCTION AREA. ACCUMULATED SEDIMENT SHALL BE REMOVED IN SUCH A MANNER THAT PREVENTS THE DEPOSITION OF THIS MATERIAL INTO THE SEWER WATERCOURSE AND AVOIDS DAMAGE TO CONTROL MEASURES. THE SEDIMENT SHALL BE REMOVED FROM THE SITE AT THE CONTRACTOR'S EXPENSE AND MANAGED IN COMPLIANCE WITH REQUIREMENTS FRO EXCESS EARTH MATERIAL, AS SPECIFIED ELSEWHERE IN THE CONTRACT.

THE CONTRACTOR SHALL IMMEDIATELY REPORT TO THE CONTRACT ADMINISTRATOR ANY ACCIDENTAL DISCHARGES OF SEDIMENT MATERIAL INTO EITHER THE WATERCOURSE OR THE STORM SEWER SYSTEM. FAILURE TO REPORT WILL BE CONSTITUTE A BRACH OF THIS SPECIFICATION AND THE CONTRACTOR MAY ALSO BE SUBJECT TO THE PENALTIES IMPOSED BY THE APPLICABLE REGULATORY AGENCY. APPROPRIATE RESPONSE MEASURES, INCLUDING ANY REPAIRS TO EXISTING CONTROL MEASURES OR THE IMPLEMENTATION OF ADDITIONAL CONTROL MEASURES, SHALL BE CARRIED OUT BY THE CONTRACTOR WITHOUT DELAY.

THE SEDIMENT CONTROL MEASURES SHALL ONLY BE REMOVED WHEN, IN THE OPINION OF THE CONTRACT ADMINISTRATOR, THE MEASURE OR MEASURES, IS NO LONGER REQUIRED. NO CONTROL MEASURE MAY BE PERMANENTLY REMOVED WITHOUT PRIOR AUTHORIZATION FROM THE CONTRACT ADMINISTRATOR. ALL SEDIMENT AND EROSION CONTROL MEASURES SHALL BE REMOVED IN A MANNER THAT AVOIDS THE ENTRY OF ANY EQUIPMENT, OTHER THAN HAND-HELD EQUIPMENT, INTO ANY WATERCOURSE, AND PREVENTS THE RELEASE OF ANY SEDIMENT OR DEBRIS INTO ANY SEWER OR WATERCOURSE WITHIN OR DOWNSTREAM OF THE WORKING AREA. ALL ACCUMULATED SEDIMENT SHALL BE REMOVED FROM THE WORKING AREA AT THE CONTRACTOR'S EXPENSE AND MANAGED IN COMPLIANCE WITH THE REQUIREMENTS FOR EXCESS EARTH MATERIAL

WHERE, IN THE OPINION OF EITHER THE CONTRACT ADMINISTRATOR OR A REGULATORY AGENCY, ANY OF THE TERMS SPECIFIED HEREIN HAVE NOT BEEN COMPLIED WITH OR PERFORMED IN A SUITABLE MANNER, OR TAT ALL, THE CONTRACTOR ADMINISTRATOR OR A REGULATORY AGENCY HAS THE RIGHT TO IMMEDIATELY WITHDRAW ITS PERMISSION TO CONTINUE THE WORK BUT MAY RENEW ITS PERMISSION UPON BEING SATISFIED THAT THE DEFAULTS OR DEFICIENCIES IN THE PERFORMANCE OF THIS SPECIFICATION BY THE CONTRACTOR HAVE BEEN REMEDIED.

SPILL CONTROL NOTES

1. ALL CONSTRUCTION EQUIPMENT SHALL BE RE-FUELED, MAINTAINED, AND STORED NO LESS THAN 30 METERS FROM WATERCOURSE, STEAMS, CREEKS, WOODLOTS, AND ANY ENVIRONMENTALLY SENSITIVE AREAS, OR AS OTHERWISE SPECIFIED.
2. THE CONTRACTOR MUST IMPLEMENT ALL NECESSARY MEASURES IN ORDER TO PREVENT LEAKS, DISCHARGES OR SPILLS OF POLLUTANTS, DELETERIOUS MATERIALS, OR OTHER SUCH MATERIALS OR SUBSTANCES WHICH WOULD OR COULD CAUSE AN ADVERSE IMPACT TO THE NATURAL ENVIRONMENT.
3. IN THE EVENT OF A LEAK, DISCHARGE OR SPILL OF POLLUTANT, DELETERIOUS MATERIAL OR OTHER SUCH MATERIAL OR SUBSTANCE WHICH WOULD OR COULD CAUSE AN ADVERSE IMPACT TO THE NATURAL ENVIRONMENT, THE CONTRACTOR SHALL:
   - 3.1. IMMEDIATELY NOTIFY APPROPRIATE FEDERAL, PROVINCIAL, AND LOCAL GOVERNMENT MINISTRIES, DEPARTMENTS, AGENCIES, AND AUTHORITIES OF THE INCIDENT IN ACCORDANCE WITH ALL CURRENT LAWS, LEGISLATION, ACTS, BY-LAWS, PERMITS, APPROVALS, ETC.
   - 3.2. TAKE IMMEDIATE MEASURES TO CONTAIN THE MATERIAL OR SUBSTANCE, AND TO TAKE SUCH MEASURES TO MITIGATE AGAINST ADVERSE IMPACTS TO THE NATURAL ENVIRONMENT.
   - 3.3. RESTORE THE AFFECTED AREA TO THE ORIGINAL CONDITION OR BETTER TO THE SATISFACTION OF THE AUTHORITIES HAVING JURISDICTION.

MUD MAT NOTES

1. THE GRANULAR MATERIAL WILL REQUIRE PERIODIC REPLACEMENT AS IT BECOMES CONTAMINATED BY VEHICLE TRAFFIC.
2. SEDIMENT SHALL BE CLEANED FROM PUBLIC ROADS AT THE END OF EACH DAY.
3. SEDIMENT SHALL BE REMOVED FROM PUBLIC ROADS BY SHOVELING OR SWEEPING AND DISPOSED OR PROPERLY IN A CONTROLLED SEDIMENT DISPOSAL AREA.

SITE GRADING NOTES

1. PRIOR TO THE COMMENCEMENT OF THE SITE GRADING WORKS, ALL SILTATION CONTROL DEVICES SHALL BE INSTALLED AND OPERATIONAL PER EROSION CONTROL PLAN.
2. ALL GRANULAR AND PAVEMENT FOR ROADS/PARKING AREAS SHALL BE CONSTRUCTED IN ACCORDANCE WITH GEOTECHNICAL ENGINEER'S RECOMMENDATIONS.
3. ALL TOPSOIL AND ORGANIC MATERIAL SHALL BE STRIPPED WITHIN THE ROAD AND PARKING AREAS ALLOWANCE PRIOR TO THE COMMENCEMENT OF CONSTRUCTION.
4. CONCRETE CURB SHALL BE IN ACCORDANCE WITH THE CITY OF OTTAWA STD. SC1.1 OR OPSD 600.110. PROVISION SHALL BE MADE OR CURB DEPRESSIONS AS INDICATED ON ARCHITECTURAL SITE PLAN. CONCRETE SIDEWALK SHALL BE IN ACCORDANCE WITH CITY OF OTTAWA STD SC1.4. ALL CURBS, CONCRETE ISLANDS, AND SIDEWALKS SHOWN O THIS DRAWING ARE TO BR PRICED IN SITE WORKS PORTION OF THE CONTRACT.
5. PAVEMENT REINSTATEMENT FOR SERVICE AND UTILITY CUTS SHALL BE IN ACCORDANCE WITH THE CITY OF OTTAWA STD. R10 AND OPSD 509.010 AND OPSS 310.
6. GRANULAR 'A' SHALL BE PLACED TO A MINIMUM THICKNESS OF 300MM AROUND ALL STRUCTURES WITHIN THE PAVEMENT AREA.
7. SUB-EXCAVATE SOFT AREAS AND FILL WITH GRANULAR 'B' COMPACTED IN MAXIMUM 300MM LIFTS.
8. ALL WORK ON THE MUNICIPAL RIGHT OF WAY AND EASEMENTS TO BE INSPECTED BY THE MUNICIPALITY PRIOR BACKFILLING.
9. CONTRACTOR TO OBTAIN A ROAD OCCUPANCY PERMIT 48 HOURS PRIOR TO COMMENCING ANY WORK WITHIN THE MUNICIPAL ROAD ALLOWANCE, IF REQUIRED BY THE MUNICIPALITY.
10. ALL PAVEMENT MARKING FEATURES AND SITE SIGNAGE SHALL BE PLACED PER ARCHITECTURAL SITE PLAN. LINE PAINTING AND DIRECTIONAL SYMBOLS SHALL BE APPLIED WITH A MINIMUM OF TWO COATS OF ORGANIC SOLVENT PAINT.
11. REFER TO ARCHITECTURAL SITE PLAN FOR DIMENSIONS AND SITE DETAILS.
12. STEP JOINTS ARE TO BE USED WHERE PROPOSED ASPHALT MEETS EXISTING ASPHALT. ALL JOINTS MUST BE SEALED.
13. SIDEWALKS TO BE 13MM & BEVELED AT 2:1 OR 6MM WITH NO BEVEL REQUIRED BELOW THE FINISHED FLOOR SLAB ELEVATION AT ENTRANCES REQUIRED TO BE BARRIER-FREE, UNLESS OTHERWISE NOTED. ALL IN ACCORDANCE WITH OBC 3.8.1.3 & OTTAWA ACCESSIBILITY DESIGN STANDARDS.
14. WHERE APPLICABLE THE CONTRACTOR IS TO SUBMIT SHOP DRAWINGS TO THE ENGINEER FOR APPROVAL PRIOR TO CONSTRUCTION. SHOP DRAWINGS MUST BE SITE SPECIFIC, SIGNED AND SEALED BY A LICENSED STRUCTURAL ENGINEER. THE CONTRACTOR WILL ALSO BE REQUIRED TO SUPPLY AND GEOTECHNICAL CERTIFICATION OF THE AS-CONSTRUCTED RETAINING WALL TO THE ENGINEER PRIOR TO FINAL ACCEPTANCE.

ROADWORK SPECIFICATIONS

15. ROADWORK TO BE COMPLETED IN ACCORDANCE WITH THE GEOTECHNICAL REPORT.
16. ALL TOPSOIL AND ORGANIC MATERIAL SHALL BE STRIPPED WITHIN THE ROAD ALLOWANCE PRIOR TO THE COMMENCEMENT OF CONSTRUCTION AND STOCK PILLED ON SITE AS DIRECTED BY NATIONAL MUNICIPALITY.
17. THE SUBGRADE SHALL BE CROWNED AND SLOPED AT LEAST 2% AND PROOF ROLLED WITH HEAVY ROLLERS.
18. SUB-EXCAVATE SOFT AREAS AND FILL WITH GRANULAR 'A', TYPE II COMPACTED IN MAXIMUM 300MM LIFTS.
19. ALL GRANULAR FOR ROADS SHALL BE COMPACTED TO MINIMUM OF 100% STANDARD PROCTOR DENSITY MAXIMUM DRY DENSITY (SPMDD).
20. CONCRETE RAMP C/W TACTILE WALKING SURFACE INDICATORS COMPONENT AS PER OPSD 310.039. TACTILE WALKING SURFACE INDICATORS TO BE INSTALLED AT ALL RAMPS. MATERIAL TO BE POLYMER COMPOSITE, COLOR GREY.

SANITARY, FOUNDATION DRAIN, STORM SEWER AND WATERMAIN NOTES

GENERAL

1. LASER ALIGNMENT CONTROL TO BE UTILIZED ON ALL SEWER INSTALLATIONS.
2. CLAY SEALS TO BE INSTALLED AS PER CITY STANDARD DRAWING S8. THE SEALS SHOULD BE AT LEAST 1.5M LONG (IN THE TRENCH DIRECTION) AND SHOULD EXTEND FROM TRENCH WALL TO TRENCH WALL. THE SEALS SHOULD EXTEND FROM THE FROST LINE AND FULLY PENETRATE THE BEDDING, SUB-BEDDING, AND COVER MATERIAL. THE BARRIERS SHOULD CONSIST OF RELATIVELY DRY AND COMPATIBLE BROWN SILTY CLAY PLACED IN MAXIMUM 225MM LIFTS AND COMPACTED TO A MINIMUM OF 95% SPMDD. THE CLAY SEALS SHOULD BE PLACED AT THE SITE BOUNDARIES AND AT 60M INTERVALS IN THE SERVICE TRENCHES.
3. SERVICES TO BUILDING TO BE TERMINATED 1.0M FROM THE OUTSIDE FACE OF BUILDING UNLESS OTHERWISE NOTED.
4. ALL MAINTENANCE STRUCTURE AND CATCH BASIN EXCAVATIONS TO BE BACKFILLED WITH GRANULAR MATERIAL COMPACTED TO 98% STANDARD PROCTOR DENSITY. A MINIMUM OF 300MM AROUND STRUCTURES.
5. "MODULO" OR APPROVED PRE-CAST MAINTENANCE STRUCTURE AND CATCH BASIN ADJUSTERS TO BE USED IN LIEU OF BRICKING. PARGE ADJUSTING UNITS ON THE OUTSIDE ONLY.
6. SAFETY PLATFORMS SHALL BE PER OPSD 404.02.
7. DROP STRUCTURES SHALL BE IN ACCORDANCE WITH OPSD 1003.01, IF APPLICABLE.
8. THE CONTRACTOR IS TO PROVIDE CCTV CAMERA INSPECTIONS OF ALL SEWERS, INCLUDING PICTORIAL REPORT, ONE (1) CD COPY AND TWO (2) VIDEO RECORDING IN A FORMAT ACCEPTABLE TO ENGINEER. ALL SEWER ARE TO BE FLUSHED PRIOR TO CAMERA INSPECTION. ASPHALT WEAR COURSE SHALL NOT BE PLACED UNTIL THE VIDEO INSPECTION OF SEWERS AND NECESSARY REPAIRS HAVE BEEN COMPLETED TO THE SATISFACTION OF THE ENGINEER.
9. CONTRACTOR SHALL PERFORM LEAKAGE TESTING, IN THE PRESENCE OF THE CONSULTANT, FOR SANITARY SEWERS IN ACCORDANCE WITH OPSS 407. CONTRACTOR SHALL PERFORM VIDEO INSPECTION OF ALL SEWERS. A COPY OF THE VIDEO AND INSPECTION REPORT SHALL BE SUBMITTED TO THE CONSULTANT FOR REVIEW AND APPROVAL PRIOR TO PLACEMENT OF WEAR COURSE ASPHALT.

SANITARY

10. ALL SANITARY SEWER INSTALLATION SHALL CONFORM TO THE LATEST REVISIONS OF THE CITY OF OTTAWA AND THE ONTARIO PROVINCIAL STANDARD DRAWINGS (OPSD). AND SPECIFICATIONS (OPSS).
11. ALL SANITARY GRAVITY SEWER SHALL BE PVC SDR 35, IPEX 'RING-TITE' (OR APPROVED EQUIVALENT) PER CSA STANDARD B182.2 OR LATEST AMENDMENT, UNLESS SPECIFIED OTHERWISE.
12. EXISTING MAINTENANCE STRUCTURES TO BE RE-BENCHED WHERE A NEW CONNECTION IS MADE.
13. SANITARY GRAVITY SEWER TRENCH AND BEDDING SHALL BE PER CITY OF OTTAWA STD. S6 AND S7 CLASS 'B' BEDDING, UNLESS SPECIFIED OTHERWISE.
14. SANITARY MAINTENANCE STRUCTURE FRAME AND COVERS SHALL BE PER CITY OF OTTAWA STD. S24 AND S25.
15. SANITARY MAINTENANCE STRUCTURES SHALL BE BENCHED PER OPSD 701.021.
16. 100MM THICK HIGH-DENSITY GRADE 'A' POLYSTYRENE INSULATION TO BE INSTALLED IN ACCORDANCE WITH CITY STD W22 WHERE INDICATED ON DRAWING SSP-1.

STORM

17. ALL REINFORCED CONCRETE STORM SEWER PIPE SHALL BE IN ACCORDANCE WITH CSA A257.2, OR LATEST AMENDMENT. ALL NON-REINFORCED CONCRETE STORM SEWER PIPE SHALL BE IN ACCORDANCE WITH CSA A257.1, OR LATEST AMENDMENT. PIPE SHALL BE JOINED WITH STD. RUBBER GASKETS AS PER CSA A257.3, OR LATEST AMENDMENT.
18. ALL STORM SEWER TRENCH AND BEDDING SHALL BE IN ACCORDANCE WITH THE CITY OF OTTAWA STD. S6 AND S7 CLASS 'B' UNLESS OTHERWISE SPECIFIED. BEDDING AND COVER MATERIAL SHALL BE SPECIFIED BY PROJECT GEOTECHNICAL ENGINEER.
19. ALL PVC STORM SEWERS ARE TO BE SDR 35 APPROVED PER C.S.A. B182.2 OR LATEST AMENDMENT, UNLESS OTHERWISE SPECIFIED.
20. CATCH BASIN SHALL BE IN ACCORDANCE WITH OPSD 705.010.
21. CATCH BASIN LEADS SHALL BE IN 200MM DIA. AT 1% SLOPE (MIN) UNLESS SPECIFIED OTHERWISE.
22. ALL CATCH BASINS SHALL HAVE 600MM SUMPS, UNLESS SPECIFIED OTHERWISE.
23. ALL CATCH BASIN LEAD INVERTS TO BE 1.5M BELOW FINISHED GRADE UNLESS SPECIFIED OTHERWISE.
24. THE STORM SEWER CLASSES HAVE BEEN DESIGNED BASED ON BEDDING CONDITIONS SPECIFIED ABOVE. WHERE THE SPECIFIED TRENCH WIDTH IS EXCEEDED , THE CONTRACTOR IS REQUIRED TO PROVIDE AND SHALL BE RESPONSIBLE FOR EXTRA TEMPORARY AND/OR PERMANENT REPAIRS MADE NECESSARY BY THE WIDENED TRENCH.
25. ALL ROAD AND PARKING LOT CATCH BASINS TO BE INSTALLED WITH ORTHOGONALLY PLACED SUBDRAINS IN ACCORDANCE WITH DETAIL. PERFORATED SUBDRAIN FOR ROAD AND PARKING LOT CATCH BASIN SHALL BE INSTALLED PER CITY STD R1 UNLESS OTHERWISE NOTED.
26. PERFORATED SUBDRAIN FOR REAR YARD AND LANDSCAPING APPLICATIONS SHALL BE INSTALLED PER CITY STD S29, S30 AND S31, WHERE APPLICABLE.
27. RIP-RAP TREATMENT SEWER AND CULVERT OUTLETS PER OPSD 810.010.
28. ALL STORM SEWER/ CULVERTS TO BE INSTALLED WITH FROST TREATMENT PER OPSD 803.031 WHERE APPLICABLE.
29. ALL STORM MANHOLES WITH PIPE LESS THAN 900MM IN DIAMETER SHALL BE CONSTRUCTED WITH A 300MM SUMP AS PER SDG, CLAUSE 6.2.6.

WATERMAIN

30. ALL WATERMAIN INSTALLATION SHALL CONFORM TO THE LATEST REVISIONS OF THE CITY OF OTTAWA AND THE ONTARIO PROVINCIAL STANDARD DRAWINGS (OPSD) AND SPECIFICATIONS (OPSS).
31. ALL PVC WATERMAINS SHALL BE AWWA C-900 CLASS 150, SDR 18 OR APPROVED EQUIVALENT.
32. ALL WATER SERVICES LESS THAN OR EQUAL TO 50MM IN DIAMETER TO BE TYPE 'K' COPPER.
33. WATERMAIN TRENCH AND BEDDING SHALL BE IN ACCORDANCE WITH CITY OF OTTAWA STANDARD W17. UNLESS SPECIFIED OTHERWISE. BEDDING AND COVER MATERIAL SHALL BE SPECIFIED BY THE PROJECT GEOTECHNICAL ENGINEER.
34. ALL PVC WATERMAINS, SHALL BE INSTALLED WITH A 10 GAUGE STRANDED COPPER TWU OR RWU TRACER WIRE IN ACCORDANCE WITH CITY OF OTTAWA STD. W.36.
35. CATHODIC PROTECTION IS REQUIRED ON ALL METALLIC FITTINGS PER CITY OF OTTAWA STD.25.5 AND W25.6.
36. VALVE BOXES SHALL BE INSTALLED PER CITY OF OTTAWA STD W24.
37. WATERMAIN IN FILL AREAS TO BE INSTALLED WITH RESTRAINED JOINTS PER CITY OF OTTAWA STD.25.5 AND W25.6.
38. THRUST BLOCKING OF WATERMAINS TO BE INSTALLED PER CITY OF OTTAWA STD. W25.3 AND W25.4.
39. THE CONTRACTOR SHALL PROVIDE ALL TEMPORARY CAPS, PLUGS, BLOW-OFFS, AND NOZZLES REQUIRED FOR TESTING AND DISINFECTION OF THE WATERMAIN.
40. WATERMAIN CROSSING OVER AND BELOW SEWERS SHALL BE IN ACCORDANCE WITH THE CITY OF OTTAWA STD. W25,2 AND W25, RESPECTIVELY.
41. WATER SERVICES ARE TO BE INSULATED PER CITY STD. W23 WHERE SEPARATION BETWEEN SERVICES AND MAINTENANCE HOLES ARE LESS THAN 2.4M.
42. THE MINIMUM VERTICAL CLEARANCE BETWEEN WATERMAIN AND SEWER/UTILITY IS 0.5M PER MOE GUIDELINES. FOR CROSSING UNDER SEWERS, ADEQUATE STRUCTURAL SUPPORT FOR THE SEWER IS REQUIRED TO PREVENT EXCESSIVE DEFLECTION OF JOINTS AND SETTLING. THE LENGTH OF WATER PIPE SHALL BE CENTERED AT THE POINT OF CROSSING TO ENSURE THAT THE JOINTS WILL BE EQUIDISTANT AND AS FAR AS POSSIBLE FROM THE SEWER.
43. ALL WATERMAINS SHALL HAVE A MINIMUM COVER OR 2.4M, OTHERWISE THERMAL INSULATION IS REQUIRED AS PER STD DWG W22.
44. GENERAL WATER PLANT TO UTILITY CLEARANCE AS PER STD DWG R20.
45. FIRE HYDRANT INSTALLATION AS PER STD DWG W19, ALL BOTTOM OF HYDRANT FLANGE ELEVATIONS TO BE INSTALLED 0.10M ABOVE PROPOSED FINISHED GRADE AT HYDRANT; FIRE HYDRANT LOCATION AS PER STD DWG W18.
46. BUILDING SERVICE TO BE CAPPED 1.0M OFF THE FACE OF THE BUILDING UNLESS OTHERWISE NOTED AND MUST BE RESTRAINED A MINIMUM OF 12M BACK FROM STUB.
47. ALL WATERMAINS SHALL BE HYDROSTATICALLY TESTED IN ACCORDANCE WITH THE CITY OF OTTAWA AND ONTARIO GUIDELINES UNLESS OTHERWISE DIRECTED. PROVISIONS FOR FLUSHING WATER LINE PRIOR TO TESTING, ETC. MUST BE PROVIDED.
48. ALL WATERMAINS SHALL BE BACTERIOLOGICALLY TESTED IN ACCORDANCE WITH THE CITY OF OTTAWA AND ONTARIO GUIDELINES. ALL CHLORINATED WATER TO BE DISCHARGED AND PRETREATED TO ACCEPTABLE LEVELS PRIOR TO DISCHARGE. ALL DISCHARGED WATER MUST BE CONTROLLED AND TREATED SO AS NOT TO ADVERSELY EFFECT ENVIRONMENT. IT IS RESPONSIBILITY OF THE CONTRACTOR TO ENSURE THAT ALL MUNICIPAL AND/OR PROVINCIAL REQUIREMENTS ARE FOLLOWED.
49. ALL WATERMAIN STUBS SHALL BE TERMINATED WITH A PLUG AND 50MM BLOW OFF UNLESS OTHERWISE NOTED.

USE AND INTERPRETATION OF DRAWINGS

GENERAL CONDITIONS OF THE CONTRACT FOR CONSTRUCTION ARE PART OF THE CONTRACT DOCUMENTS AND DESCRIBE USE AND INTENT OF THE DRAWING. THE CONTRACT DOCUMENTS INCLUDE NOT ONLY THE DRAWINGS, BUT ALSO THE OWNER-CONTRACTOR AGREEMENTS, CONDITIONS OF THE CONTRACT, THE SPECIFICATIONS, ADDENDA, AND MODIFICATIONS ISSUED AFTER EXECUTION OF THE CONTRACT. THESE CONTRACT DOCUMENTS ARE COMPLEMENTARY, AND WHAT IS REQUIRED BY ANY ONE SHALL BE BINDING AS IF REQUIRED BY ALL. WORK NOT COMPLETELY DELINEATED HEREON SHALL BE CONSTRUCTED OF THE SAME MATERIALS AND DETAILED SIMILARLY AS WORK SHOWN MORE COMPLETELY ELSEWHERE IN THE CONTRACT DOCUMENTS.

BY USE OF THE DRAWINGS FOR CONSTRUCTION OF THE PROJECT, THE OWNER CONFIRMS THAT HE HAS REVIEWED AND APPROVED THE DRAWINGS. THE CONTRACTOR CONFIRMS THAT HE HAS VISITED THE SITE, FAMILIARIZED HIMSELF WITH THE LOCAL CONDITIONS, VERIFIED FIELD DIMENSIONS AND CORRELATED HIS OBSERVATIONS WITH THE REQUIREMENTS OF THE CONTRACT DOCUMENTS.

AS INSTRUMENTS OF SERVICE, ALL DRAWINGS, SPECIFICATIONS, CAD FILES OR OTHER ELECTRONIC MEDIA AND COPIED THERE OF FURNISHED BY THE ENGINEER ARE HIS PROPERTY. THEY ARE TO BE USED ONLY FOR THIS PROJECT AND ARE NOT TO BE USED ON ANY OTHER PROJECT, INCLUDING REPEATS OF THE PROJECT. CHANGES TO THE DRAWINGS MAY ONLY BE MADE BY THE ENGINEER.

UNLESS THE REVISION TITLE IS "ISSUED FOR CONSTRUCTION", THESE DRAWINGS SHALL BE CONSIDERED PRELIMINARY AND SHALL NOT BE USED AS A CONSTRUCTION DOCUMENT.

THESE DRAWINGS ILLUSTRATES THE WORK TO BE DONE. THE ENGINEER IS NOT RESPONSIBLE FOR THE MEANS, METHODS, TECHNIQUES, SEQUENCES, AND PROCEDURES USED TO DO THE WORK, OR THE SAFETY ASPECTS OF CONSTRUCTION, AND NOTHING ON THESE DRAWINGS EXPRESSED OR IMPLIED CHANGES THIS CONDITION. CONTRACTOR SHALL DETERMINE ALL CONDITIONS AT THE SITE AND SHALL BE RESPONSIBLE FOR KNOWING HOW THEY AFFECT THE WORK. SUBMITTAL OF A BID TO PERFORM THIS WORK IS ACKNOWLEDGEMENT OF THE RESPONSIBILITIES, AND THAT THEY HAVE BEEN FULLY CONSIDERED IN PLANNING OF THE WORK, AND THE BID PRICE. NO CLAIMS FOR EXTRA CHARGES DUE TO THESE CONDITIONS WILL BE FORTHCOMING.

UNAUTHORIZED CHANGES:

IN THE EVENT THE CLIENT, THE CLIENT'S CONTRACTORS OR SUBCONTRACTORS, OR ANYONE FOR WHOM THE CLIENT IS

LEGEND:

- EXISTING PROPERTY LINE TO REMAIN
- PROPOSED CURB
- PROPOSED DEPRESSED CURB
- PROPOSED TERRACING (3:1 MIN.)
- PROPOSED SILT FENCE AS PER OPSD 219.110
- PROPOSED LIMITS OF CONSTRUCTION
- PROPOSED DOOR ENTRANCE/EXIT
- PROPOSED GRASS AREA (100mm TOP SOIL & SOD)
- PROPOSED UNIT PAVERS
- PROPOSED CONCRETE FEATURES
- PROPOSED HEAVY DUTY ASPHALT
- PROPOSED LIGHT DUTY ASPHALT
- PROPOSED STONE DUST FEATURES
- PROPOSED DRY CREEK
- PROPOSED BRIDGE
- PROPOSED BENCH

×50.00	PROPOSED ELEVATION
×50.00HP	PROPOSED HIGH POINT ELEVATION
×50.00S	PROPOSED SWALE ELEVATION
×50.00BC	PROPOSED BOTTOM OF CURB / ASPHALT ELEVATION
×50.00TC	PROPOSED TOP OF CURB ELEVATION
×50.00BW	PROPOSED EXPOSED BOTTOM OF RETAINING WALL
×50.00TW	PROPOSED TOP OF RETAINING WALL
×50.00EX	MATCH INTO EXISTING ELEVATION
×70.19	EXISTING ELEVATION

- PROPOSED OVERLAND MAJOR FLOW ROUTE

SUB — SUB	PROPOSED 100mmØ PERFORATED SUBDRAIN
STM — STM	PROPOSED STORM SEWER
SAN — SAN	PROPOSED SANITARY SEWER
WTR — WTR	PROPOSED WATERMAIN
STM — STM	EXISTING STORM SEWER
SAN — SAN	EXISTING SANITARY SEWER
WTR — WTR	EXISTING WATERMAIN

- PROPOSED ROOF SCUPPER LOCATION
- EXISTING MANHOLE
- EXISTING CATCHBASIN
- PROPOSED CATCHBASIN-MANHOLE/CATCHBASIN
- PROPOSED MANHOLE
- PROPOSED CURB STOP
- PROPOSED PIPE INSULATION
- PROPOSED 100 YEAR HIGH WATER LEVEL
- STORM WATERSHED EXTENT

CA-XX / CONTROLLED / AREA / RUNOFF
- CATCHMENT NAME
- RUNOFF COEFFICIENT
- AREA IN HECTARES

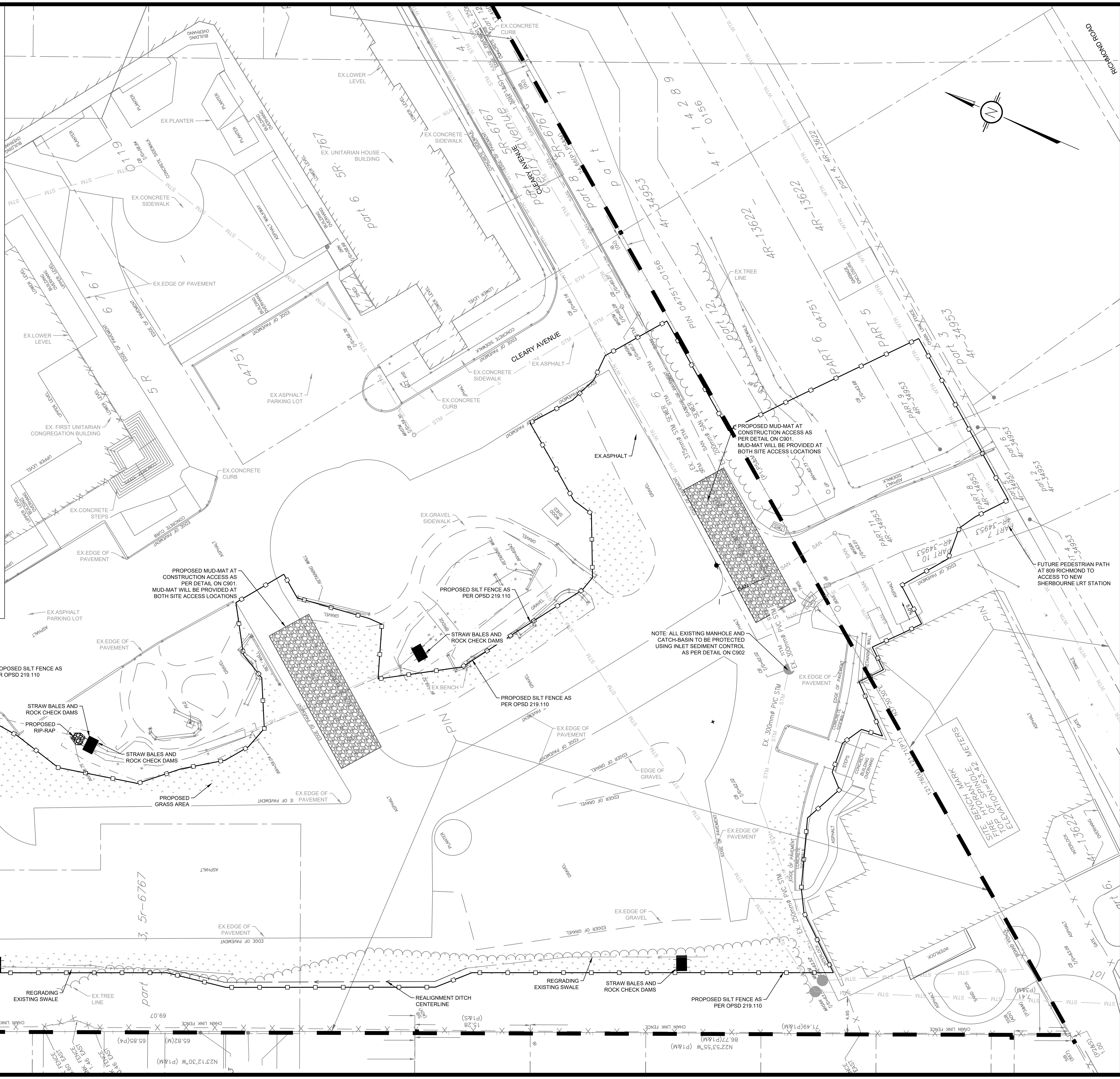

USE AND INTERPRETATION OF DRAWINGS

GENERAL CONDITIONS OF THE CONTRACT FOR CONSTRUCTION ARE PART OF THE CONTRACT DOCUMENTS AND DESCRIBE USE AND INTENT OF THE DRAWING. THE CONTRACT DOCUMENTS INCLUDE NOT ONLY THE DRAWINGS, BUT ALSO THE OWNER-CONTRACTOR AGREEMENTS, CONDITIONS OF THE CONTRACT, THE SPECIFICATIONS, ADDENDA, AND MODIFICATIONS ISSUED AFTER EXECUTION OF THE CONTRACT. THESE CONTRACT DOCUMENTS ARE COMPLEMENTARY, AND WHAT IS REQUIRED BY ANY ONE SHALL BE BINDING AS IF REQUIRED BY ALL. WORK NOT COMPLETELY DELINEATED HEREON SHALL BE CONSTRUCTED OF THE SAME MATERIALS AND DETAILED SIMILARLY AS WORK SHOWN MORE COMPLETELY ELSEWHERE IN THE CONTRACT DOCUMENTS.

BY USE OF THE DRAWINGS FOR CONSTRUCTION OF THE PROJECT, THE OWNER CONFIRMS THAT HE HAS REVIEWED AND APPROVED THE DRAWINGS. THE CONTRACTOR CONFIRMS THAT HE HAS VISITED THE SITE, FAMILIARIZED HIMSELF WITH THE LOCAL CONDITIONS, VERIFIED FIELD DIMENSIONS AND CORRELATED HIS OBSERVATIONS WITH THE REQUIREMENTS OF THE CONTRACT DOCUMENTS.

AS INSTRUMENTS OF SERVICE, ALL DRAWINGS, SPECIFICATIONS, CAD FILES OR OTHER ELECTRONIC MEDIA AND COPIED THERE OF FURNISHED BY THE ENGINEER ARE HIS PROPERTY. THEY ARE TO BE USED ONLY FOR THIS PROJECT AND ARE NOT TO BE USED ON ANY OTHER PROJECT, INCLUDING REPEATS OF THE PROJECT. CHANGES TO THE DRAWINGS MAY ONLY BE MADE BY THE ENGINEER.

UNLESS THE REVISION TITLE IS "ISSUED FOR CONSTRUCTION", THESE DRAWINGS SHALL BE CONSIDERED PRELIMINARY AND SHALL NOT BE USED AS A CONSTRUCTION DOCUMENT.

THESE DRAWINGS ILLUSTRATES THE WORK TO BE DONE. THE ENGINEER IS NOT RESPONSIBLE FOR THE MEANS, METHODS, TECHNIQUES, SEQUENCES, AND PROCEDURES USED TO DO THE WORK, OR THE SAFETY ASPECTS OF CONSTRUCTION, AND NOTHING ON THESE DRAWINGS EXPRESSED OR IMPLIED CHANGES THIS CONDITION. CONTRACTOR SHALL DETERMINE ALL CONDITIONS AT THE SITE AND SHALL BE RESPONSIBLE FOR KNOWING HOW THEY AFFECT THE WORK. SUBMITTAL OF A BID TO PERFORM THIS WORK IS ACKNOWLEDGEMENT OF THE RESPONSIBILITIES, AND THAT THEY HAVE BEEN FULLY CONSIDERED IN PLANNING OF THE WORK, AND THE BID PRICE. NO CLAIMS FOR EXTRA CHARGES DUE TO THESE CONDITIONS WILL BE FORTHCOMING.

UNAUTHORIZED CHANGES:

IN THE EVENT THE CLIENT, THE CLIENT'S CONTRACTORS OR SUBCONTRACTORS, OR ANYONE FOR WHOM THE CLIENT IS LEGALLY LIABLE MAKES OR PERMITS TO BE MADE ANY CHANGES TO ANY REPORTS, PLANS, SPECIFICATIONS OR OTHER CONSTRUCTION DOCUMENTS PREPARED BY LRL ASSOCIATES LTD. (LRL) WITHOUT OBTAINING LRL'S PRIOR WRITTEN CONSENT, THE CLIENT SHALL ASSUME FULL RESPONSIBILITY FOR THE RESULTS OF SUCH CHANGES. THEREFORE THE CLIENT AGREES TO WAIVE ANY CLAIM AGAINST LRL AND TO RELEASE LRL FROM ANY LIABILITY ARISING DIRECTLY OR INDIRECTLY FROM SUCH UNAUTHORIZED CHANGES.

IN ADDITION, THE CLIENT AGREES, TO THE FULLEST EXTENT PERMITTED BY LAW, TO INDEMNIFY AND HOLD HARMLESS LRL FROM ANY DAMAGES, LIABILITIES OR COST, INCLUDING REASONABLE ATTORNEY'S FEES AND COST OF DEFENSE, ARISING FROM SUCH CHANGES.

IN ADDITION, THE CLIENT AGREES TO INCLUDE IN ANY CONTRACTS FOR CONSTRUCTION APPROPRIATE LANGUAGE THAT PROHIBITS THE CONTRACTOR OR ANY SUBCONTRACTORS OF ANY TIER FROM MAKING ANY CHANGES OR MODIFICATIONS TO LRL'S CONSTRUCTION DOCUMENTS WITHOUT THE PRIOR WRITTEN APPROVAL OF LRL AND THAT FURTHER REQUIRES THE CONTRACTOR TO INDEMNIFY BOTH LRL AND THE CLIENT FROM ANY LIABILITY OR COST ARISING FROM SUCH CHANGES MADE WITHOUT SUCH PROPER AUTHORIZATION.

GENERAL NOTES:

EXISTING SERVICES AND UTILITIES SHOWN ON THESE DRAWINGS ARE TAKEN FROM THE BEST AVAILABLE RECORDS, BUT MAY NOT BE COMPLETE OR TO DATE. CONTRACTOR SHALL VERIFY IN FIELD FOR LOCATION AND ELEVATION OF PIPES AND CHECK WITH THE UTILITY COMPANIES BEFORE DIGGING OR PERFORMING WORK.

CONTRACTOR IS ADVISED TO COLLECT INFORMATION ON SOIL CONDITIONS BEFORE START OF CONSTRUCTION.

THE ENGINEER WAIVES ANY AND ALL RESPONSIBILITY AND LIABILITY FOR PROBLEMS WHICH ARISE FROM FAILURE TO FOLLOW THESE PLANS, SPECIFICATIONS AND THE DESIGN INTENT THEY CONVEY, OR FOR PROBLEMS WHICH ARISE FROM OTHERS' FAILURE TO OBTAIN AND/OR FOLLOW THE ENGINEER'S GUIDANCE WITH RESPECT TO ANY ERRORS, OMISSIONS, INCONSISTENCIES AMBIGUITIES OR CONFLICTS WHICH ARE ALLEGED.

CONTRACTOR TO VERIFY ALL DIMENSIONS AND NOTIFY THE ENGINEER OF ANY DISCREPANCIES BEFORE WORK COMMENCES. DO NOT SCALE DRAWINGS.

ADDITIONAL EROSION AND SEDIMENT CONTROL MEASURES, INCLUDING STRAW BALE BARRIERS AND TEMPORARY CHECK DAMS, SHALL BE INSTALLED WHERE REQUIRED TO INTERCEPT RUNOFF, REDUCE FLOW VELOCITIES, PROMOTE SEDIMENT SETTLEMENT, AND PROTECT DOWNSTREAM DRAINAGE SYSTEMS AND RECEIVING AREAS. THE TYPE, LOCATION, AND EXTENT OF THESE MEASURES SHALL BE ADJUSTED AS NECESSARY BASED ON SITE CONDITIONS AND THE PROGRESSION OF CONSTRUCTION ACTIVITIES.

5m 0 5 10m

SCALE: 1:250

No.	REVISIONS	BY	DATE
03	ISSUED FOR APPROVAL	S.V.	14 OCT. 2026
02	RE-ISSUED FOR APPROVAL	S.V.	13 FEB. 2026
01	ISSUED FOR SPC APPROVAL	S.V.	12 NOV. 2025

LICENSED PROFESSIONAL ENGINEER
V. JOHNSON
100510576
10-14-2026
PROVINCE OF ONTARIO

NOT AUTHENTIC UNLESS SIGNED AND DATED

LRL
ENGINEERING | INGÉNIERIE
5430 Canotek Road | Ottawa, ON, K1J 9G2
www.lrl.ca | (613) 842-3434

CLIENT
THEIA PARTNERS

DESIGNED BY:	DRAWN BY:	APPROVED BY:
S.V.	S.V.	V.J.

PROJECT
30 CLEARY AVENUE ODAYANHAWAY DEVELOPMENT
30 CLEARY AVENUE, OTTAWA, ON

FILE NO.	PLAN NO.
D07-12-25-0149	19403

DRAWING TITLE
EROSION AND SEDIMENT CONTROL PLAN

PROJECT NO.
2631617

DATE
OCTOBER 2026

C101

LEGEND:

- EXISTING PROPERTY LINE TO REMAIN
- PROPOSED CURB
- PROPOSED DEPRESSED CURB (DC)
- PROPOSED TERRACING (3:1 MIN.)
- PROPOSED SILT FENCE AS PER OPSD 219.110
- PROPOSED LIMITS OF CONSTRUCTION
- PROPOSED DOOR ENTRANCE/EXIT
- PROPOSED GRASS AREA (100mm TOP SOIL & SOD)
- PROPOSED CONCRETE FEATURES/SLAB
- PROPOSED LIGHT DUTY ASPHALT
- PROPOSED HEAVY DUTY ASPHALT
- PROPOSED RIP RAP
- ×50.00 PROPOSED ELEVATION
- ×50.00HP PROPOSED HIGH POINT ELEVATION
- ×50.00LP PROPOSED LOW POINT ELEVATION
- ×50.00BC PROPOSED BOTTOM OF CURB / ASPHALT ELEVATION
- ×50.00TC PROPOSED TOP OF CURB ELEVATION
- ×50.00BW PROPOSED EXPOSED BOTTOM OF RETAINING WALL
- ×50.00TW PROPOSED TOP OF RETAINING WALL
- ×50.00EXSW MATCH INTO EXISTING SWALE ELEVATION
- ×50.00EX MATCH INTO EXISTING ELEVATION
- ×70.19 EXISTING ELEVATION
- PROPOSED OVERLAND MAJOR FLOW ROUTE
- SUB SUB PROPOSED 100mmØ PERFORATED SUBDRAIN
- STM STM PROPOSED STORM SEWER
- SAN SAN PROPOSED SANITARY SEWER
- WTR WTR PROPOSED WATERMAIN
- STM STM EXISTING STORM SEWER
- SAN SAN EXISTING SANITARY SEWER
- WTR WTR EXISTING WATERMAIN
- EXISTING MANHOLE
- EXISTING CATCHBASIN
- PROPOSED CATCHBASIN-MANHOLE/CATCHBASIN
- PROPOSED MANHOLE
- PROPOSED CURB STOP
- BH APPROXIMATE BOREHOLE LOCATION
- PROPOSED PIPE INSULATION
- PROPOSED 100 YEAR HIGH WATER LEVEL
- STORM WATERSHED EXTENT
- WS-XX CONTROLLED AREA RUNOFF — WATERSHED NAME / RUNOFF COEFFICIENT / AREA IN HECTARES

TOPOGRAPHIC SURVEY OF
LOTS 8, 9 & 10 & PART OF LOTS 6 & 7 (WEST CLYBOURNE AVENUE) PART OF LOTS 6 & 7 (EAST CLYBOURNE LOTS), PART OF LOT 6 (WEST ARDMORE AVENUE), PART OF CLYBOURNE AVENUE (CLOSED BY BY-LAW CR573286), PART OF CONNAUGHT STREET (CLOSED BY BY-LAW CR573286) REGISTERED PLAN NO.236 AND PART OF LOTS 26 & 27 CONCESSION 1 (OTTAWA FRONT)

BEARING NOTE
BEARINGS ARE GRID, DERIVED FROM THE CAN-NET VRS NETWORK OBSERVATIONS ON NCC HORIZONTAL CONTROL MONUMENTS 1773330 AND 1780121, CENTRAL MERIDIAN 76°00' WEST LONGITUDE MTM ZONE 9, NAD83 (CSRS) (2010.0).

1773330 N:5006060.00 E:324686.04
1780121 N:5003563.865 E:326004.67

ELEVATION NOTE
ELEVATIONS SHOWN HEREON ARE GEODETIC (CGVD-1928:1978) AND ARE DERIVED FROM THE CAN-NET VRS NETWORK BENCHMARK OTTAWA ELEVATION=95.230.

PAVEMENT STRUCTURE

COURSE	MATERIAL	THICKNESS (mm) AUTOMOBILE PARKING	THICKNESS (mm) TRUCK ROUTE (HEAVY TRAFFIC)
SURFACE	HL.3 A/C (PG 58-34)	40	50
BINDER	HL.8 A/C (PG 58-34)	50	70
BASECOURSE	OPSS GRANULAR "A"	150	150
SUBBASE	OPSS GRANULAR "B" TYPE II	400	500

NOTE:
IN PREPARATION FOR PAVEMENT CONSTRUCTION AT THIS SITE, ANY SURFICIAL OR NEAR SURFACE/SUBGRADE LEVEL TOPSOIL AND ANY SOFT, WET OR DELETERIOUS MATERIALS SHOULD BE REMOVED FROM THE PROPOSED PAVED AREAS. THE EXPOSED SUBGRADE SHOULD BE INSPECTED AND APPROVED BY GEOTECHNICAL PERSONNEL AND ANY SOFT AREAS EVIDENT SHOULD BE SUBEXCAVATED AND REPLACED WITH SUITABLE EARTH BORROW APPROVED BY THE GEOTECHNICAL ENGINEER. THE SUBGRADE SHOULD BE SHAPED AND CROWNED TO PROMOTE DRAINAGE OF THE SITE DRAINAGE STRUCTURES. FOLLOWING APPROVAL OF THE PREPARATION OF THE SUBGRADE, THE PAVEMENT GRANULARS MAY BE PLACED.
PAVEMENT STRUCTURE AS PER GEOTECHNICAL REPORT PREPARED BY WSP DATED NOVEMBER 07, 2023.

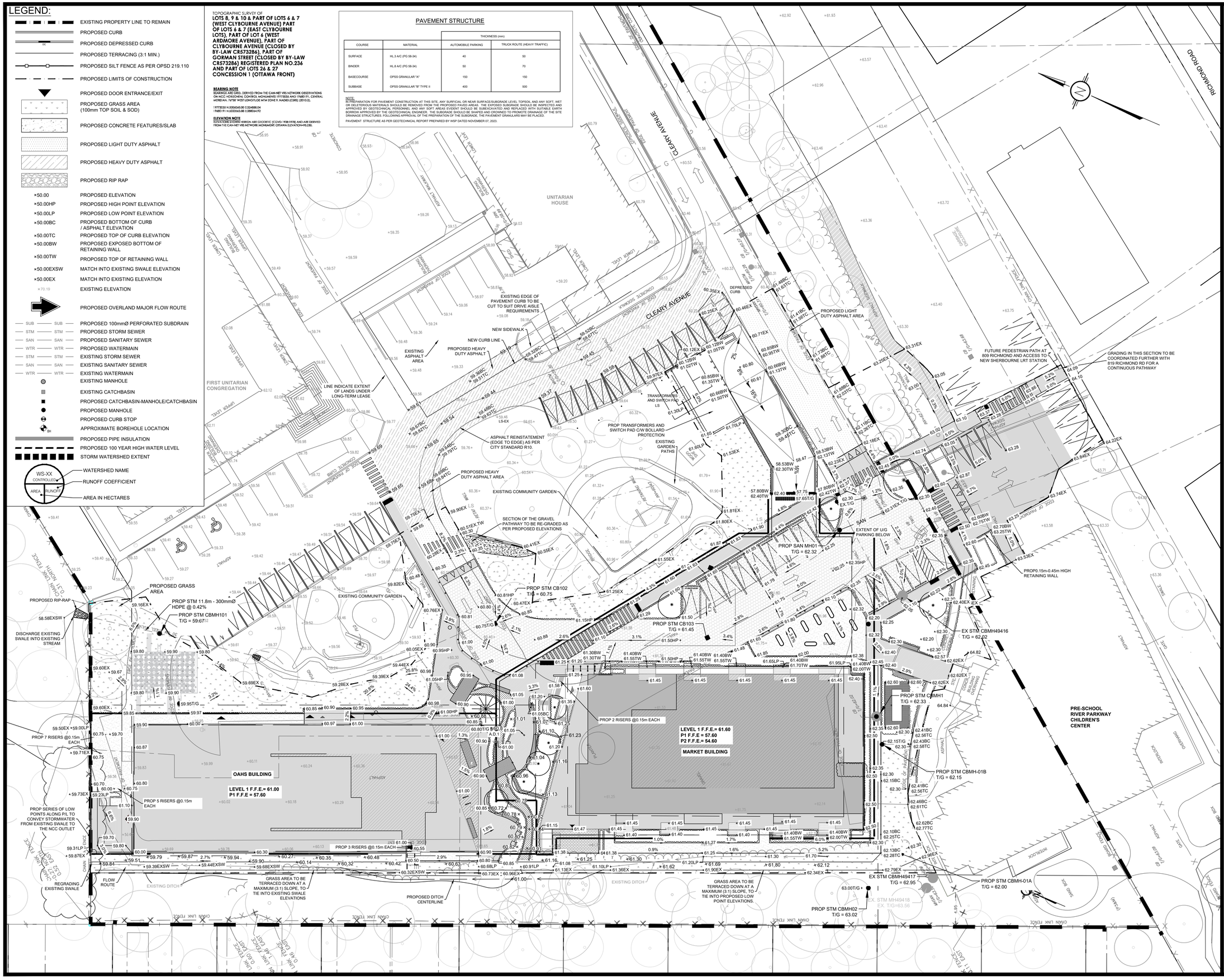

USE AND INTERPRETATION OF DRAWINGS

GENERAL CONDITIONS OF THE CONTRACT FOR CONSTRUCTION ARE PART OF THE CONTRACT DOCUMENTS AND DESCRIBE USE AND INTENT OF THE DRAWING. THE CONTRACT DOCUMENTS INCLUDE NOT ONLY THE DRAWINGS, BUT ALSO THE OWNER-CONTRACTOR AGREEMENTS, CONDITIONS OF THE CONTRACT, THE SPECIFICATIONS, ADDENDA, AND MODIFICATIONS ISSUED AFTER EXECUTION OF THE CONTRACT. THESE CONTRACT DOCUMENTS ARE COMPLEMENTARY, AND WHAT IS REQUIRED BY ANY ONE SHALL BE BINDING AS IF REQUIRED BY ALL. WORK NOT COMPLETELY DELINEATED HEREON SHALL BE CONSTRUCTED OF THE SAME MATERIALS AND DETAILED SIMILARLY AS WORK SHOWN MORE COMPLETELY ELSEWHERE IN THE CONTRACT DOCUMENTS.

BY USE OF THE DRAWINGS FOR CONSTRUCTION OF THE PROJECT, THE OWNER CONFIRMS THAT HE HAS REVIEWED AND APPROVED THE DRAWINGS. THE CONTRACTOR CONFIRMS THAT HE HAS VISITED THE SITE, FAMILIARIZED HIMSELF WITH THE LOCAL CONDITIONS, VERIFIED FIELD DIMENSIONS AND CORRELATED HIS OBSERVATIONS WITH THE REQUIREMENTS OF THE CONTRACT DOCUMENTS.

AS INSTRUMENTS OF SERVICE, ALL DRAWINGS, SPECIFICATIONS, CAD FILES OR OTHER ELECTRONIC MEDIA AND COPIED THERE OF FURNISHED BY THE ENGINEER ARE HIS PROPERTY. THEY ARE TO BE USED ONLY FOR THIS PROJECT AND ARE NOT TO BE USED ON ANY OTHER PROJECT, INCLUDING REPEATS OF THE PROJECT. CHANGES TO THE DRAWINGS MAY ONLY BE MADE BY THE ENGINEER.

UNLESS THE REVISION TITLE IS "ISSUED FOR CONSTRUCTION", THESE DRAWINGS SHALL BE CONSIDERED PRELIMINARY AND SHALL NOT BE USED AS A CONSTRUCTION DOCUMENT.

THESE DRAWINGS ILLUSTRATES THE WORK TO BE DONE. THE ENGINEER IS NOT RESPONSIBLE FOR THE MEANS, METHODS, TECHNIQUES, SEQUENCES, AND PROCEDURES USED TO DO THE WORK, OR THE SAFETY ASPECTS OF CONSTRUCTION, AND NOTHING ON THESE DRAWINGS EXPRESSED OR IMPLIED CHANGES THIS CONDITION. CONTRACTOR SHALL DETERMINE ALL CONDITIONS AT THE SITE AND SHALL BE RESPONSIBLE FOR KNOWING HOW THEY AFFECT THE WORK. SUBMITTAL OF A BID TO PERFORM THIS WORK IS ACKNOWLEDGEMENT OF THE RESPONSIBILITIES, AND THAT THEY HAVE BEEN FULLY CONSIDERED IN PLANNING OF THE WORK, AND THE BID PRICE. NO CLAIMS FOR EXTRA CHARGES DUE TO THESE CONDITIONS WILL BE FORTHCOMING.

UNAUTHORIZED CHANGES:

IN THE EVENT THE CLIENT, THE CLIENT'S CONTRACTORS OR SUBCONTRACTORS, OR ANYONE FOR WHOM THE CLIENT IS LEGALLY LIABLE MAKES OR PERMITS TO BE MADE ANY CHANGES TO ANY REPORTS, PLANS, SPECIFICATIONS OR OTHER CONSTRUCTION DOCUMENTS PREPARED BY LRL ASSOCIATES LTD. (LRL) WITHOUT OBTAINING LRL'S PRIOR WRITTEN CONSENT, THE CLIENT SHALL ASSUME FULL RESPONSIBILITY FOR THE RESULTS OF SUCH CHANGES, THEREFORE THE CLIENT AGREES TO WAIVE ANY CLAIM AGAINST LRL AND TO RELEASE LRL FROM ANY LIABILITY ARISING DIRECTLY OR INDIRECTLY FROM SUCH UNAUTHORIZED CHANGES.

IN ADDITION, THE CLIENT AGREES, TO THE FULLEST EXTENT PERMITTED BY LAW, TO INDEMNIFY AND HOLD HARMLESS LRL FROM ANY DAMAGES, LIABILITIES OR COST, INCLUDING REASONABLE ATTORNEY'S FEES AND COST OF DEFENSE, ARISING FROM SUCH CHANGES.

IN ADDITION, THE CLIENT AGREES TO INCLUDE IN ANY CONTRACTS FOR CONSTRUCTION APPROPRIATE LANGUAGE THAT PROHIBITS THE CONTRACTOR OR ANY SUBCONTRACTORS OF ANY TIER FROM MAKING ANY CHANGES OR MODIFICATIONS TO LRL'S CONSTRUCTION DOCUMENTS WITHOUT THE PRIOR WRITTEN APPROVAL OF LRL AND THAT FURTHER REQUIRES THE CONTRACTOR TO INDEMNIFY BOTH LRL AND THE CLIENT FROM ANY LIABILITY OR COST ARISING FROM SUCH CHANGES MADE WITHOUT SUCH PROPER AUTHORIZATION.

GENERAL NOTES:

EXISTING SERVICES AND UTILITIES SHOWN ON THESE DRAWINGS ARE TAKEN FROM THE BEST AVAILABLE RECORDS, BUT MAY NOT BE COMPLETE OR TO DATE. CONTRACTOR SHALL VERIFY IN FIELD FOR LOCATION AND ELEVATION OF PIPES AND CHECK WITH THE UTILITY COMPANIES BEFORE DIGGING OR PERFORMING WORK.

CONTRACTOR IS ADVISED TO COLLECT INFORMATION ON SOIL CONDITIONS BEFORE START OF CONSTRUCTION.

THE ENGINEER WAIVES ANY AND ALL RESPONSIBILITY AND LIABILITY FOR PROBLEMS WHICH ARISE FROM FAILURE TO FOLLOW THESE PLANS, SPECIFICATIONS AND THE DESIGN INTENT THEY CONVEY, OR FOR PROBLEMS WHICH ARISE FROM OTHERS' FAILURE TO OBTAIN AND/OR FOLLOW THE ENGINEER'S GUIDANCE WITH RESPECT TO ANY ERRORS, OMISSIONS, INCONSISTENCIES AMBIGUITIES OR CONFLICTS WHICH ARE ALLEGED.

CONTRACTOR TO VERIFY ALL DIMENSIONS AND NOTIFY THE ENGINEER OF ANY DISCREPANCIES BEFORE WORK COMMENCES. DO NOT SCALE DRAWINGS.

ADDITIONAL EROSION AND SEDIMENT CONTROL MEASURES, INCLUDING STRAW BALE BARRIERS AND TEMPORARY CHECK DAMS, SHALL BE INSTALLED WHERE REQUIRED TO INTERCEPT RUNOFF, REDUCE FLOW VELOCITIES, PROMOTE SEDIMENT SETTLEMENT, AND PROTECT DOWNSTREAM DRAINAGE SYSTEMS AND RECEIVING AREAS. THE TYPE, LOCATION, AND EXTENT OF THESE MEASURES SHALL BE ADJUSTED AS NECESSARY BASED ON SITE CONDITIONS AND THE PROGRESSION OF CONSTRUCTION ACTIVITIES.

5m 0 5 10m
SCALE: 1:250

No.	REVISIONS	BY	DATE
03	ISSUED FOR APPROVAL	S.V.	14 OCT. 2026
02	RE-ISSUED FOR APPROVAL	S.V.	13 FEB. 2026
01	ISSUED FOR SPC APPROVAL	S.V.	12 NOV. 2025

LICENSED PROFESSIONAL ENGINEER
V. JOHNSON
100510576
10-14-2026
PROVINCE OF ONTARIO

NOT AUTHENTIC UNLESS SIGNED AND DATED

LRL
ENGINEERING | INGÉNIERIE
5430 Canotek Road | Ottawa, ON, K1J 9G2
www.lrl.ca | (613) 842-3434

CLIENT
THEIA PARTNERS

DESIGNED BY:	DRAWN BY:	APPROVED BY:
S.V.	S.V.	V.J.

PROJECT
30 CLEARY AVENUE ODAYANHAWAY DEVELOPMENT
30 CLEARY AVENUE, OTTAWA, ON

FILE NO.	PLAN NO.
D07-12-25-0149	19403

DRAWING TITLE
GRADING AND DRAINAGE PLAN

PROJECT NO.	DATE
2631617	OCTOBER 2026

C301

LEGEND:

- EXISTING PROPERTY LINE TO REMAIN
- PROPOSED CURB
- PROPOSED DEPRESSED CURB
- PROPOSED TERRACING (3:1 MIN.)
- PROPOSED SILT FENCE AS PER OPSD 219.110
- PROPOSED LIMITS OF CONSTRUCTION
- PROPOSED DOOR ENTRANCE/EXIT
- PROPOSED GRASS AREA (100mm TOP SOIL & SOD)
- PROPOSED UNIT PAVERS
- PROPOSED CONCRETE FEATURES
- PROPOSED HEAVY DUTY ASPHALT
- PROPOSED LIGHT DUTY ASPHALT
- PROPOSED STONE DUST FEATURES
- PROPOSED DRY CREEK
- PROPOSED BRIDGE
- PROPOSED BENCH
- ×50.00 PROPOSED ELEVATION
- ×50.00HP PROPOSED HIGH POINT ELEVATION
- ×50.00S PROPOSED SWALE ELEVATION
- ×50.00BC PROPOSED BOTTOM OF CURB / ASPHALT ELEVATION
- ×50.00TC PROPOSED TOP OF CURB ELEVATION
- ×50.00BW PROPOSED EXPOSED BOTTOM OF RETAINING WALL
- ×50.00TW PROPOSED TOP OF RETAINING WALL
- ×50.00EX MATCH INTO EXISTING ELEVATION
- ×70.19 EXISTING ELEVATION
- PROPOSED OVERLAND MAJOR FLOW ROUTE
- SUB SUB PROPOSED 100mmØ PERFORATED SUBDRAIN
- STM STM PROPOSED STORM SEWER
- SAN SAN PROPOSED SANITARY SEWER
- WTR WTR PROPOSED WATERMAIN
- STM STM EXISTING STORM SEWER
- SAN SAN EXISTING SANITARY SEWER
- WTR WTR EXISTING WATERMAIN
- PROPOSED ROOF SCUPPER LOCATION
- EXISTING MANHOLE
- EXISTING CATCHBASIN
- PROPOSED CATCHBASIN-MANHOLE/CATCHBASIN
- PROPOSED MANHOLE
- PROPOSED CURB STOP
- PROPOSED PIPE INSULATION
- PROPOSED 100 YEAR HIGH WATER LEVEL
- STORM WATERSHED EXTENT
- CA-XX CONTROLLED AREA RUNOFF — CATCHMENT NAME; RUNOFF COEFFICIENT; AREA IN HECTARES

EDGE OF PAVEMENT

UNITARIAN HOUSE

FIRST UNITARIAN CONGREGATION

CLEARY AVENUE

EXISTING 200mm Ø PVC HYDRANT LEAD. TO BE CONNECTED TO PROPOSED 200mmØ WATERMAIN

PROP 200X200X150mm TEE CONNECTION

PROPOSED 200mm Ø SECONDARY WATER SERVICE

PROP 250mm Ø GATE VALVE

PROP 250x250x250x200mm CROSS CONNECTION

PROP 250X250X250mm TEE CONNECTION

PROP 250mm Ø GATE VALVE

PROP 250mmØ SECONDARY WATER SERVICE. REFER TO C402 FOR MORE DETAILS.

FUTURE PEDESTRIAN PATH AT 809 RICHMOND AND ACCESS TO NEW SHERBOURNW LRT STATION

STRUCTURE TO BE ADJUSTED/ REPLACED TO ACCOMMODATE LARGER PIPE

CR-01
STM OBV = 59.64
SAN INV = 60.36
VERTICAL CLEARANCE= 0.72m

PROPOSED HYDRANT AS PER CITY STD W19 C/W 1.0m-150mm Ø PVC HYDRANT LEAD, VALVE & VALVE BOX TO BE CONNECTED TO EX. 250mmØ WATERMAIN

PROPOSED TRENCH DRAIN T/G =57.65

TO DIRECT FLOW TO INTERNAL CISTERN VIA BLDG MECH SYSTEM. PRECISE LOCATION TO BE COORDINATED WITH ARCHITECTURE AND MECHANICAL PLANS.

CR-02
WTR OBV = 61.55
SAN INV = 60.68
VERTICAL CLEARANCE= 0.87m
PRECISE LOCATION & INVERT TO BE CONFIRMED BY CONTRACTOR.

CONNECT TO EX. STM CBMH3 (EQUIPPED W/ ICD)
PROP T/G = 62.30
INV. (SW)= ±59.07
EX. INV. (NE)= ±56.99
PRECISE LOCATION & INVERT TO BE CONFIRMED BY CONTRACTOR.

PROP SAN 6.5m - 200mmØ PVC DR-28 @ 2.14%

CONNECT TO EX. SAN MH
T/G = 62.31
INV. (NE)= ±60.20
INV. (SE)= ±60.35
PROP INV (NW): ±60.40
PRECISE LOCATION & INVERT TO BE CONFIRMED BY CONTRACTOR.
WATERTIGHT FRAME AND COVER REQUIRED

BENCH MARK FIRE HYDRANT.
TOP OF SPINDLE ELEV = 63.42

PROP 4.6m-250mmØ WTR SERVICE TO CONNECT TO EX. 250mm Ø WATERMAIN
WTR OBV @ STUB: 61.46
INV AND PRECISE LOCATION TO BE COORDINATED WITH ARCH AND MECHANICAL PLANS

PROP SAN 1.0m -200mmØ PVC DR-28 @ 3.00%
SAN INV @ STUB: 60.60
INV AND PRECISE LOCATION TO BE COORDINATED WITH ARCH & MECHANICAL PLANS.

PROP STM 15.3m - 525mmØ PVC DR-35 @ 2.48%

EX. STM CBMH49416
EX. T/G=62.02
INV. (W) =59.71
INV. (N) =59.45

STRUCTURE TO BE ADJUSTED TO ACCOMMODATE LARGER PIPE. PROPOSED PIPES TO FOLLOW THE EXISTING INV ELEVATIONS

EX. STM CBMH1
EX. T/G=62.33
INV. (SW) =60.08
INV. (E) =59.93

PROP STM 18.1m - 525mmØ PVC DR-35 @ 1.22%

PROP STM 4.1m - 525mmØ PVC DR-35 @ -1.69%

PROP STM CBMH-01B
T/G = 62.15
NE INV = 60.01

EX. 250mmØ STM SEWER PIPE CONVEYING FLOW FROM PRE-SCHOOL BUILDING TO BE REMOVED. PRECISE LOCATION, ALIGNMENT AND INV TO BE CONFIRMED BY CONTRACTOR ON-SITE.

PROP STM CBMH-01A
T/G = 62.00
S INV = 60.25

PROP STM 6.8m - 525mmØ PVC DR-35 @ 1.61%

PROP STM CBMH84
T/G = 63.02
SW INV = 60.42
N INV = 60.39

PROP 525mmØ STM INV= 60.02
(TO MATCH INTO EXISTING INV)
REFER TO ARCH AND MECHANICAL PLANS FOR ALIGNMENT AND CONNECTION DETAILS

PROP STM 10.4m - 525mmØ PVC DR-35 DR-35 @ 1.00%

PROP SAN01
T/G = 62.32
W INV = 60.57
SE INV = 60.54
WATERTIGHT FRAME AND COVER REQUIRED

PROP 525mmØ STORM SEWER CONNECTION. INV AT BUILDING = ±60.30
PRECISE LOCATION AND INVERT TO BE COORDINATED WITH ARCH AND MECHANICAL PLANS .

PROP WATER ENTRY ROOM LOCATED @ PARKING P1. REFER TO ARCH PLANS FOR MORE DETAILS.

PROP CISTERN LOCATED @ PARKING P1. REFER TO ARCH PLANS FOR MORE DETAILS.

EXTENT OF PARKING BELOW

22.5° TYP.

PROP STM 24.5m - 525mmØ PVC DR-35 DR-35 @ 1.00%

PROP STM CB102
T/G = 60.75
SW INV = 58.60
CBMH102 TO SERVE AS EMERGENCY CISTERN SPILLOVER POINT

PROP STM 7.6m - 150mmØ PVC DR-35 @ 0.66%

PROP STM CB103
T/G = 61.45
CB TO OUTLET TO U/G CISTERN VIA INTERNAL PLUMBING.

OUTLET INV TO BE COORDINATED WITH MECHNICAL PLANS.

CR-02
STM OBV = 59.99
WTR INV = 61.46
VERTICAL CLEARANCE= 1.47m
PRECISE LOCATION & INVERT TO BE CONFIRMED BY CONTRACTOR.

EX. 66.5-525mmØ STM SEWER @1.0%

SEWER CONVEYS STORMWATER FROM 851 RICHMOND RD+ PRE-SCHOOL BACKYARD TO EX.GARDEN POND. STORM SEWER TO BE RE-ROUTED THROUGH THE PROP BUILDING PARKING GARAGE. REFER TO MECHANICAL PLANS FOR MORE DETAILS. BY-PASS PUMPING TO BE REQUIRED DURING CONSTRUCTION.

MARKET BUILDING PROPOSED
16-STOREY RESIDENTIAL BUILDING

PROP STM 38.5m - 525mmØ PVC DR-35 @ 1.00%

EXTENT OF PARKING BELOW

PROP 525mmØ STORM SEWER CONNECTION. INV AT BUILDING = ±60.87
PRECISE LOCATION AND INVERT TO BE COORDINATED WITH ARCH AND MECHANICAL PLANS .

PROP STM CBMH02
T/G = 63.02
SE INV = 60.84
NE INV = 60.81

PROP STM 8.5m - 525mmØ PVC DR-35 @ 1.00%

EX. STM MH49418
EX. T/G=63.56
INV. (NE) =60.92
INV. (S) =60.92
INV. (NW) =60.92
RELEASE RATE= 267.8L/s

EX. STM CBMH49417
EX. T/G=62.65
INV. (SE) =60.38
INV. (N) =60.36
EXISTING HOLE TO BE SEATED

EX. 525mmØ STM- SEWER CONVEYING STORMWATER FROM 851 RICHMOND RD TO EXISTING MH4A AND EVENTUALLY DRAINING TO THE EX GARDEN PONDS VIA A CONTROLLED RELEASE RATE. PRECISE LOCATION, ALIGNMENT AND INV TO BE CONFIRMED BY CONTRACTOR ON-SITE.

45.0° TYP.

PROP CULVERT OUTLET INV = 58.60
EX GROUND ELEV = 58.58
C/W RODENT GRATE, RIP-RAP AS PER OPSD 801.101

CONTRACTOR TO REMOVE AND REPLACE SECTION OF EXISTING CHAIN LINK FENCE

PROP STM CULVERT11.8m - 300mmØ HDPE @ 0.42%

PROP STM CBMH101
T/G = 59.67
S INV = 58.68
W INV = 58.74
N INV = 58.65

PROPOSED HYDRANT AS PER CITY STD W19 C/W 56.5m-150mm Ø PVC HYDRANT LEAD, VALVE & VALVE BOX TO BE CONNECTED TO EX. 150mmØ WATERMAIN

REMOVE AND REPLACE EXISTING CULVERT

PROP STM CULVERT 14.3m - 300mmØ HDPE @ 0.49%

EXISTING NCC OUTLET

PROP CULVERT INV = 58.75
(TO MATCH TO EXISTING INV)

PROP INV @ SYSTEM = 58.80
PROP STM 2.6m - 250mmØ PVC DR-35 @ 2.29%

PRP ACO STORMBIXX VOL RETENTION SYSTEM (OR APPROVED EQUIVALENT)

PROP CISTERN OUTLET VIA INTERNAL PLUMBING.
PROP STM 3.0- 200mm Ø PVC DR-35 @ 1.0%.
STM INV @ SYSTEM = 58.80

DRAIN TO OUTLET TO U/G. CISTERN VIA INTERNAL PLUMBING
OUTLET INV. TO BE COORDINATED WITH MECHANICAL PLANS

PROP INV @ BUILDING = 58.55
PRECISE LOC AND INV TO BE COORDINATED WITH MECHANICAL PLANS

PROP OGS STORMCEPTOR EFO4 (OR APPROVED EQUIVALENT)
T/G = 59.95
W INV = 58.87
E INV = 58.81

PROP ROOF DRAINS OUTLET VIA INTERNAL PLUMBING.
PROP STM 4.6- 200mm Ø PVC DR-35 @ 1.0%
STM INV @ BUILDING = 58.83
STM INV @ SYSTEM = 58.80
PRECISE LOCATION AND INV TO BE COORDINATED WITH MECHANICAL PLANS

PROP CISTERN OUTLET VIA INTERNAL PLUMBING.
PROP STM 3.0- 200mm Ø PVC DR-35 @ 1.0%.
STM INV @ BUILDING = 58.90
PRECISE LOCATION AND INV TO BE COORDINATED WITH MECHANICAL PLANS

OAHS BUILDING PROPOSED
6-STOREY RESIDENTIAL BUILDING

EXTENT OF PARKING BELOW

5m 0 5 10m
SCALE: 1:250

USE AND INTERPRETATION OF DRAWINGS

GENERAL CONDITIONS OF THE CONTRACT FOR CONSTRUCTION ARE PART OF THE CONTRACT DOCUMENTS AND DESCRIBE USE AND INTENT OF THE DRAWING. THE CONTRACT DOCUMENTS INCLUDE NOT ONLY THE DRAWINGS, BUT ALSO THE OWNER-CONTRACTOR AGREEMENTS, CONDITIONS OF THE CONTRACT, THE SPECIFICATIONS, ADDENDA, AND MODIFICATIONS ISSUED AFTER EXECUTION OF THE CONTRACT. THESE CONTRACT DOCUMENTS ARE COMPLEMENTARY, AND WHAT IS REQUIRED BY ANY ONE SHALL BE BINDING AS IF REQUIRED BY ALL. WORK NOT COMPLETELY DELINEATED HEREON SHALL BE CONSTRUCTED OF THE SAME MATERIALS AND DETAILED SIMILARLY AS WORK SHOWN MORE COMPLETELY ELSEWHERE IN THE CONTRACT DOCUMENTS.

BY USE OF THE DRAWINGS FOR CONSTRUCTION OF THE PROJECT, THE OWNER CONFIRMS THAT HE HAS REVIEWED AND APPROVED THE DRAWINGS. THE CONTRACTOR CONFIRMS THAT HE HAS VISITED THE SITE, FAMILIARIZED HIMSELF WITH THE LOCAL CONDITIONS, VERIFIED FIELD DIMENSIONS AND CORRELATED HIS OBSERVATIONS WITH THE REQUIREMENTS OF THE CONTRACT DOCUMENTS.

AS INSTRUMENTS OF SERVICE, ALL DRAWINGS, SPECIFICATIONS, CAD FILES OR OTHER ELECTRONIC MEDIA AND COPIED THERE OF FURNISHED BY THE ENGINEER ARE HIS PROPERTY. THEY ARE TO BE USED ONLY FOR THIS PROJECT AND ARE NOT TO BE USED ON ANY OTHER PROJECT, INCLUDING REPEATS OF THE PROJECT. CHANGES TO THE DRAWINGS MAY ONLY BE MADE BY THE ENGINEER.

UNLESS THE REVISION TITLE IS "ISSUED FOR CONSTRUCTION", THESE DRAWINGS SHALL BE CONSIDERED PRELIMINARY AND SHALL NOT BE USED AS A CONSTRUCTION DOCUMENT.

THESE DRAWINGS ILLUSTRATES THE WORK TO BE DONE. THE ENGINEER IS NOT RESPONSIBLE FOR THE MEANS, METHODS, TECHNIQUES, SEQUENCES, AND PROCEDURES USED TO DO THE WORK, OR THE SAFETY ASPECTS OF CONSTRUCTION, AND NOTHING ON THESE DRAWINGS EXPRESSED OR IMPLIED CHANGES THIS CONDITION. CONTRACTOR SHALL DETERMINE ALL CONDITIONS AT THE SITE AND SHALL BE RESPONSIBLE FOR KNOWING HOW THEY AFFECT THE WORK. SUBMITTAL OF A BID TO PERFORM THIS WORK IS ACKNOWLEDGEMENT OF THE RESPONSIBILITIES, AND THAT THEY HAVE BEEN FULLY CONSIDERED IN PLANNING OF THE WORK, AND THE BID PRICE. NO CLAIMS FOR EXTRA CHANGES DUE TO THESE CONDITIONS WILL BE FORTHCOMING.

UNAUTHORIZED CHANGES:

IN THE EVENT THE CLIENT, THE CLIENT'S CONTRACTORS OR SUBCONTRACTORS, OR ANYONE FOR WHOM THE CLIENT IS LEGALLY LIABLE MAKES OR PERMITS TO BE MADE ANY CHANGES TO ANY REPORTS, PLANS, SPECIFICATIONS OR OTHER CONSTRUCTION DOCUMENTS PREPARED BY LRL ASSOCIATES LTD. (LRL) WITHOUT OBTAINING LRL'S PRIOR WRITTEN CONSENT, THE CLIENT SHALL ASSUME FULL RESPONSIBILITY FOR THE RESULTS OF SUCH CHANGES, THEREFORE THE CLIENT AGREES TO WAIVE ANY CLAIM AGAINST LRL AND TO RELEASE LRL FROM ANY LIABILITY ARISING DIRECTLY OR INDIRECTLY FROM SUCH UNAUTHORIZED CHANGES.

IN ADDITION, THE CLIENT AGREES, TO THE FULLEST EXTENT PERMITTED BY LAW, TO INDEMNIFY AND HOLD HARMLESS LRL FROM ANY DAMAGES, LIABILITIES OR COST, INCLUDING REASONABLE ATTORNEY'S FEES AND COST OF DEFENSE, ARISING FROM SUCH CHANGES.

IN ADDITION, THE CLIENT AGREES TO INCLUDE IN ANY CONTRACTS FOR CONSTRUCTION APPROPRIATE LANGUAGE THAT PROHIBITS THE CONTRACTOR OR ANY SUBCONTRACTORS OF ANY TIER FROM MAKING ANY CHANGES OR MODIFICATIONS TO LRL'S CONSTRUCTION DOCUMENTS WITHOUT THE PRIOR WRITTEN APPROVAL OF LRL AND THAT FURTHER REQUIRES THE CONTRACTOR TO INDEMNIFY BOTH LRL AND THE CLIENT FROM ANY LIABILITY OR COST ARISING FROM SUCH CHANGES MADE WITHOUT SUCH PROPER AUTHORIZATION.

GENERAL NOTES:

EXISTING SERVICES AND UTILITIES SHOWN ON THESE DRAWINGS ARE TAKEN FROM THE BEST AVAILABLE RECORDS, BUT MAY NOT BE COMPLETE OR TO DATE. CONTRACTOR SHALL VERIFY IN FIELD FOR LOCATION AND ELEVATION OF PIPES AND CHECK WITH THE UTILITY COMPANIES BEFORE DIGGING OR PERFORMING WORK.

CONTRACTOR IS ADVISED TO COLLECT INFORMATION ON SOIL CONDITIONS BEFORE START OF CONSTRUCTION.

THE ENGINEER WAIVES ANY AND ALL RESPONSIBILITY AND LIABILITY FOR PROBLEMS WHICH ARISE FROM FAILURE TO FOLLOW THESE PLANS, SPECIFICATIONS AND THE DESIGN INTENT THEY CONVEY, OR FOR PROBLEMS WHICH ARISE FROM OTHERS' FAILURE TO OBTAIN AND/OR FOLLOW THE ENGINEER'S GUIDANCE WITH RESPECT TO ANY ERRORS, OMISSIONS, INCONSISTENCIES AMBIGUITIES OR CONFLICTS WHICH ARE ALLEGED.

CONTRACTOR TO VERIFY ALL DIMENSIONS AND NOTIFY THE ENGINEER OF ANY DISCREPANCIES BEFORE WORK COMMENCES. DO NOT SCALE DRAWINGS.

ADDITIONAL EROSION AND SEDIMENT CONTROL MEASURES, INCLUDING STRAW BALE BARRIERS AND TEMPORARY CHECK DAMS, SHALL BE INSTALLED WHERE REQUIRED TO INTERCEPT RUNOFF, REDUCE FLOW VELOCITIES, PROMOTE SEDIMENT SETTLEMENT, AND PROTECT DOWNSTREAM DRAINAGE SYSTEMS AND RECEIVING AREAS. THE TYPE, LOCATION, AND EXTENT OF THESE MEASURES SHALL BE ADJUSTED AS NECESSARY BASED ON SITE CONDITIONS AND THE PROGRESSION OF CONSTRUCTION ACTIVITIES.

No.	REVISIONS	BY	DATE
03	ISSUED FOR APPROVAL	S.V.	14 OCT. 2026
02	RE-ISSUED FOR APPROVAL	S.V.	13 FEB. 2026
01	ISSUED FOR SPC APPROVAL	S.V.	12 NOV. 2025

LICENSED PROFESSIONAL ENGINEER
V. JOHNSON
100510576
10-14-2026
PROVINCE OF ONTARIO

NOT AUTHENTIC UNLESS SIGNED AND DATED

LRL
ENGINEERING | INGÉNIERIE
5430 Canotek Road | Ottawa, ON, K1J 9G2
www.lrl.ca | (613) 842-3434

CLIENT
THEIA PARTNERS

DESIGNED BY:	DRAWN BY:	APPROVED BY:
S.V.	S.V.	V.J.

PROJECT
30 CLEARY AVENUE ODAYANHAWAY DEVELOPMENT
30 CLEARY AVENUE, OTTAWA, ON

FILE NO.	PLAN NO.
D07-12-25-0149	19403

DRAWING TITLE
SERVICING PLAN

PROJECT NO.	
2631617	C401
DATE	
OCTOBER 2026	

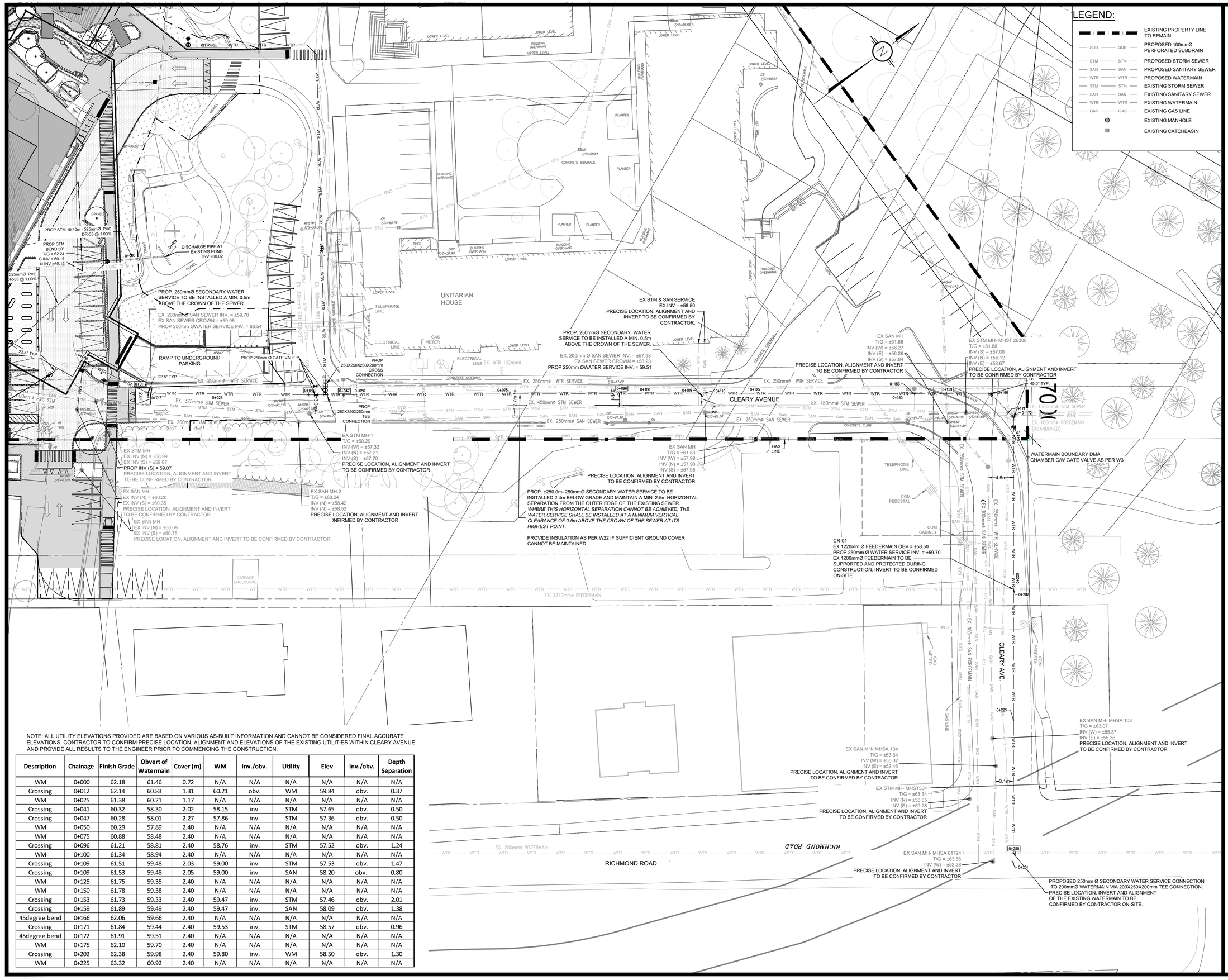

NOTE: ALL UTILITY ELEVATIONS PROVIDED ARE BASED ON VARIOUS AS-BUILT INFORMATION AND CANNOT BE CONSIDERED FINAL ACCURATE ELEVATIONS. CONTRACTOR TO CONFIRM PRECISE LOCATION, ALIGNMENT AND ELEVATIONS OF THE EXISTING UTILITIES WITHIN CLEARY AVENUE AND PROVIDE ALL RESULTS TO THE ENGINEER PRIOR TO COMMENCING THE CONSTRUCTION.

Description	Chainage	Finish Grade	Obvert of Watermain	Cover (m)	WM	inv./obv.	Utility	Elev	inv./obv.	Depth Separation
WM	0+000	62.18	61.46	0.72	N/A	N/A	N/A	N/A	N/A	N/A
Crossing	0+012	62.14	60.83	1.31	60.21	obv.	WM	59.84	obv.	0.37
WM	0+025	61.38	60.21	1.17	N/A	N/A	N/A	N/A	N/A	N/A
Crossing	0+041	60.32	58.30	2.02	58.15	inv.	STM	57.65	obv.	0.50
Crossing	0+047	60.28	58.01	2.27	57.86	inv.	STM	57.36	obv.	0.50
WM	0+050	60.29	57.89	2.40	N/A	N/A	N/A	N/A	N/A	N/A
WM	0+075	60.88	58.48	2.40	N/A	N/A	N/A	N/A	N/A	N/A
Crossing	0+096	61.21	58.81	2.40	58.76	inv.	STM	57.52	obv.	1.24
WM	0+100	61.34	58.94	2.40	N/A	N/A	N/A	N/A	N/A	N/A
Crossing	0+109	61.51	59.48	2.03	59.00	inv.	STM	57.53	obv.	1.47
Crossing	0+109	61.53	59.48	2.05	59.00	inv.	SAN	58.20	obv.	0.80
WM	0+125	61.75	59.35	2.40	N/A	N/A	N/A	N/A	N/A	N/A
WM	0+150	61.78	59.38	2.40	N/A	N/A	N/A	N/A	N/A	N/A
Crossing	0+153	61.73	59.33	2.40	59.47	inv.	STM	57.46	obv.	2.01
Crossing	0+159	61.89	59.49	2.40	59.47	inv.	SAN	58.09	obv.	1.38
45degree bend	0+166	62.06	59.66	2.40	N/A	N/A	N/A	N/A	N/A	N/A
Crossing	0+171	61.84	59.44	2.40	59.53	inv.	STM	58.57	obv.	0.96
45degree bend	0+172	61.91	59.51	2.40	N/A	N/A	N/A	N/A	N/A	N/A
WM	0+175	62.10	59.70	2.40	N/A	N/A	N/A	N/A	N/A	N/A
Crossing	0+202	62.38	59.98	2.40	59.80	inv.	WM	58.50	obv.	1.30
WM	0+225	63.32	60.92	2.40	N/A	N/A	N/A	N/A	N/A	N/A

USE AND INTERPRETATION OF DRAWINGS

GENERAL CONDITIONS OF THE CONTRACT FOR CONSTRUCTION ARE PART OF THE CONTRACT DOCUMENTS AND DESCRIBE USE AND INTENT OF THE DRAWING. THE CONTRACT DOCUMENTS INCLUDE NOT ONLY THE DRAWINGS, BUT ALSO THE OWNER-CONTRACTOR AGREEMENTS, CONDITIONS OF THE CONTRACT, THE SPECIFICATIONS, ADDENDA, AND MODIFICATIONS ISSUED AFTER EXECUTION OF THE CONTRACT. THESE CONTRACT DOCUMENTS ARE COMPLEMENTARY, AND WHAT IS REQUIRED BY ANY ONE SHALL BE BINDING AS IF REQUIRED BY ALL. WORK NOT COMPLETELY DELINEATED HEREON SHALL BE CONSTRUCTED OF THE SAME MATERIALS AND DETAILED SIMILARLY AS WORK SHOWN MORE COMPLETELY ELSEWHERE IN THE CONTRACT DOCUMENTS.

BY USE OF THE DRAWINGS FOR CONSTRUCTION OF THE PROJECT, THE OWNER CONFIRMS THAT HE HAS REVIEWED AND APPROVED THE DRAWINGS. THE CONTRACTOR CONFIRMS THAT HE HAS VISITED THE SITE, FAMILIARIZED HIMSELF WITH THE LOCAL CONDITIONS, VERIFIED FIELD DIMENSIONS AND CORRELATED HIS OBSERVATIONS WITH THE REQUIREMENTS OF THE CONTRACT DOCUMENTS.

AS INSTRUMENTS OF SERVICE, ALL DRAWINGS, SPECIFICATIONS, CAD FILES OR OTHER ELECTRONIC MEDIA AND COPIED THERE OF FURNISHED BY THE ENGINEER ARE HIS PROPERTY. THEY ARE TO BE USED ONLY FOR THIS PROJECT AND ARE NOT TO BE USED ON ANY OTHER PROJECT, INCLUDING REPEATS OF THE PROJECT. CHANGES TO THE DRAWINGS MAY ONLY BE MADE BY THE ENGINEER.

UNLESS THE REVISION TITLE IS "ISSUED FOR CONSTRUCTION", THESE DRAWINGS SHALL BE CONSIDERED PRELIMINARY AND SHALL NOT BE USED AS A CONSTRUCTION DOCUMENT.

THESE DRAWINGS ILLUSTRATES THE WORK TO BE DONE. THE ENGINEER IS NOT RESPONSIBLE FOR THE MEANS, METHODS, TECHNIQUES, SEQUENCES, AND PROCEDURES USED TO DO THE WORK, OR THE SAFETY ASPECTS OF CONSTRUCTION, AND NOTHING ON THESE DRAWINGS EXPRESSED OR IMPLIED CHANGES THIS CONDITION. CONTRACTOR SHALL DETERMINE ALL CONDITIONS AT THE SITE AND SHALL BE RESPONSIBLE FOR KNOWING HOW THEY AFFECT THE WORK. SUBMITTAL OF A BID TO PERFORM THIS WORK IS ACKNOWLEDGEMENT OF THE RESPONSIBILITIES, AND THAT THEY HAVE BEEN FULLY CONSIDERED IN PLANNING OF THE WORK, AND THE BID PRICE. NO CLAIMS FOR EXTRA CHANGES DUE TO THESE CONDITIONS WILL BE FORTHCOMING.

UNAUTHORIZED CHANGES:

IN THE EVENT THE CLIENT, THE CLIENT'S CONTRACTORS OR SUBCONTRACTORS, OR ANYONE FOR WHOM THE CLIENT IS LEGALLY LIABLE MAKES OR PERMITS TO BE MADE ANY CHANGES TO ANY REPORTS, PLANS, SPECIFICATIONS OR OTHER CONSTRUCTION DOCUMENTS PREPARED BY LRL ASSOCIATES LTD. (LRL) WITHOUT OBTAINING LRL'S PRIOR WRITTEN CONSENT, THE CLIENT SHALL ASSUME FULL RESPONSIBILITY FOR THE RESULTS OF SUCH CHANGES, THEREFORE THE CLIENT AGREES TO WAIVE ANY CLAIM AGAINST LRL AND TO RELEASE LRL FROM ANY LIABILITY ARISING DIRECTLY OR INDIRECTLY FROM SUCH UNAUTHORIZED CHANGES.

IN ADDITION, THE CLIENT AGREES, TO THE FULLEST EXTENT PERMITTED BY LAW, TO INDEMNIFY AND HOLD HARMLESS LRL FROM ANY DAMAGES, LIABILITIES OR COST, INCLUDING REASONABLE ATTORNEY'S FEES AND COST OF DEFENSE, ARISING FROM SUCH CHANGES.

IN ADDITION, THE CLIENT AGREES TO INCLUDE IN ANY CONTRACTS FOR CONSTRUCTION APPROPRIATE LANGUAGE THAT PROHIBITS THE CONTRACTOR OR ANY SUBCONTRACTORS OF ANY TIER FROM MAKING ANY CHANGES OR MODIFICATIONS TO LRL'S CONSTRUCTION DOCUMENTS WITHOUT THE PRIOR WRITTEN APPROVAL OF LRL AND THAT FURTHER REQUIRES THE CONTRACTOR TO INDEMNIFY BOTH LRL AND THE CLIENT FROM ANY LIABILITY OR COST ARISING FROM SUCH CHANGES MADE WITHOUT SUCH PROPER AUTHORIZATION.

GENERAL NOTES:

EXISTING SERVICES AND UTILITIES SHOWN ON THESE DRAWINGS ARE TAKEN FROM THE BEST AVAILABLE RECORDS, BUT MAY NOT BE COMPLETE OR TO DATE. CONTRACTOR SHALL VERIFY IN FIELD FOR LOCATION AND ELEVATION OF PIPES AND CHECK WITH THE UTILITY COMPANIES BEFORE DIGGING OR PERFORMING WORK.

CONTRACTOR IS ADVISED TO COLLECT INFORMATION ON SOIL CONDITIONS BEFORE START OF CONSTRUCTION.

THE ENGINEER WAIVES ANY AND ALL RESPONSIBILITY AND LIABILITY FOR PROBLEMS WHICH ARISE FROM FAILURE TO FOLLOW THESE PLANS, SPECIFICATIONS AND THE DESIGN INTENT THEY CONVEY, OR FOR PROBLEMS WHICH ARISE FROM OTHERS' FAILURE TO OBTAIN AND/OR FOLLOW THE ENGINEER'S GUIDANCE WITH RESPECT TO ANY ERRORS, OMISSIONS, INCONSISTENCIES AMBIGUITIES OR CONFLICTS WHICH ARE ALLEGED.

CONTRACTOR TO VERIFY ALL DIMENSIONS AND NOTIFY THE ENGINEER OF ANY DISCREPANCIES BEFORE WORK COMMENCES. DO NOT SCALE DRAWINGS.

ADDITIONAL EROSION AND SEDIMENT CONTROL MEASURES, INCLUDING STRAW BALE BARRIERS AND TEMPORARY CHECK DAMS, SHALL BE INSTALLED WHERE REQUIRED TO INTERCEPT RUNOFF, REDUCE FLOW VELOCITIES, PROMOTE SEDIMENT SETTLEMENT, AND PROTECT DOWNSTREAM DRAINAGE SYSTEMS AND RECEIVING AREAS. THE TYPE, LOCATION, AND EXTENT OF THESE MEASURES SHALL BE ADJUSTED AS NECESSARY BASED ON SITE CONDITIONS AND THE PROGRESSION OF CONSTRUCTION ACTIVITIES.

No.	REVISIONS	BY	DATE
03	ISSUED FOR APPROVAL	S.V.	14 OCT. 2026
02	RE-ISSUED FOR APPROVAL	S.V.	13 FEB. 2026
01	ISSUED FOR SPC APPROVAL	S.V.	12 NOV. 2025

LICENSED PROFESSIONAL ENGINEER
V. JOHNSON
100510576
10-14-2026
PROVINCE OF ONTARIO

NOT AUTHENTIC UNLESS SIGNED AND DATED

LRL
ENGINEERING | INGÉNIERIE
5430 Canotek Road | Ottawa, ON, K1J 9G2
www.lrl.ca | (613) 842-3434

CLIENT
THEIA PARTNERS

DESIGNED BY:	DRAWN BY:	APPROVED BY:
S.V.	S.V.	V.J.

PROJECT
30 CLEARY AVENUE ODAYANHAWAY DEVELOPMENT
30 CLEARY AVENUE, OTTAWA, ON

FILE NO. D07-12-25-0149
PLAN NO. 19403

DRAWING TITLE
SERVICING PLAN- SECONDARY WATER

PROJECT NO. 2631617
DATE OCTOBER 2026

C402

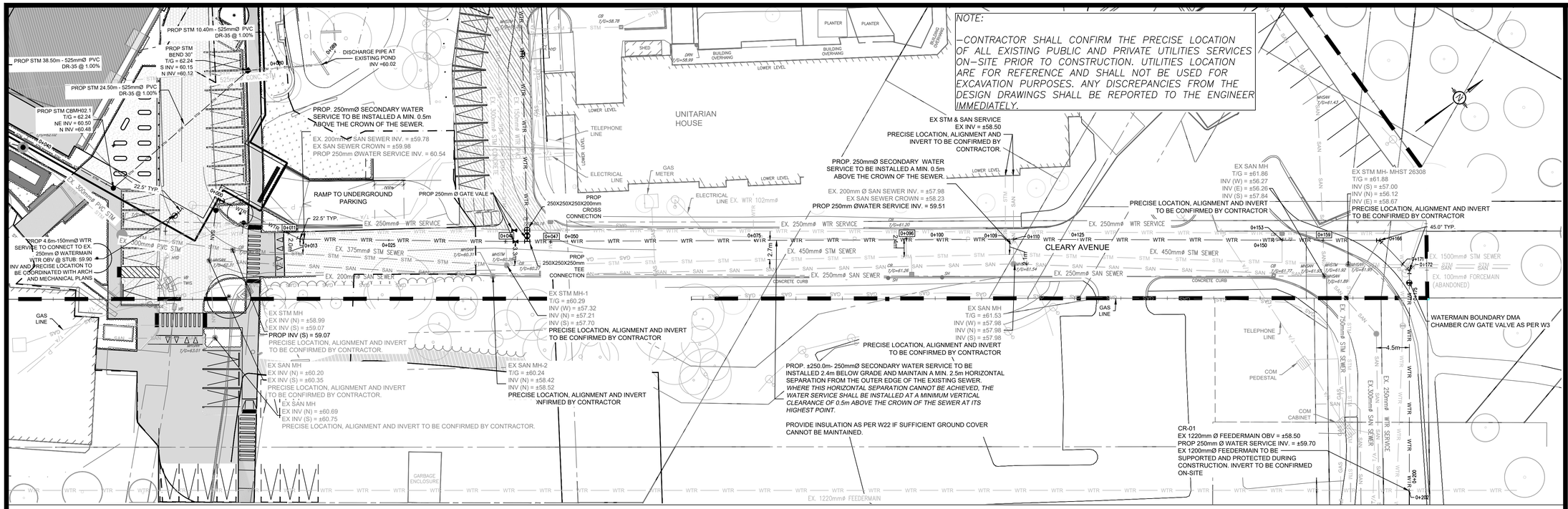

PROP WATER SERVICE STA. 0+000 TO 0+166

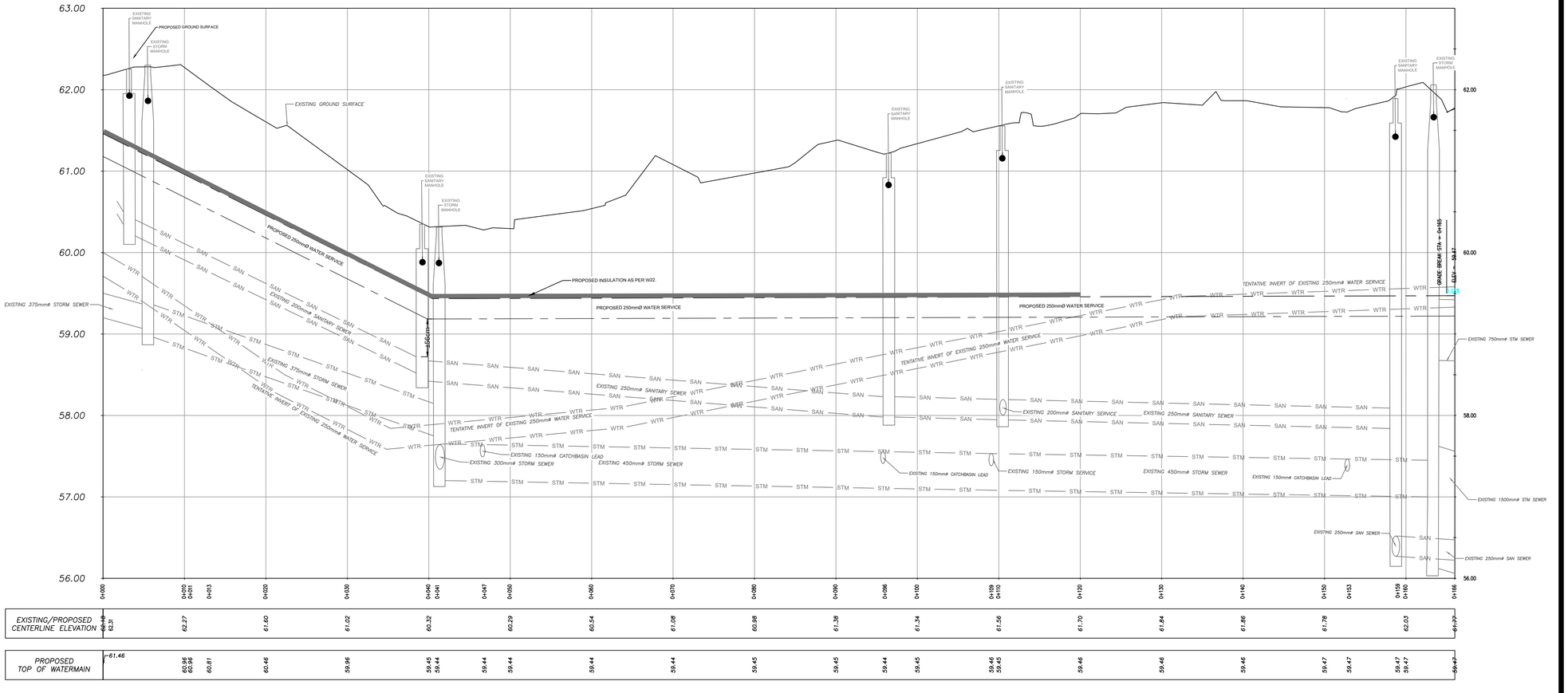

NOTE:
-PROPOSED WATER SERVICE HAS BEEN DESIGNED WITH ASSUMED ELEVATION BASED ON BEST AVAILABLE INFORMATION. DESIGN SUBJECT TO ADJUSTMENT IN THE FIELD PENDING CONFIRMATION OF EXISTING INVERT ELEVATIONS.

- PROFILE OF EXISTING STORM/SANITARY/WATERMAIN SHOWN DIAGRAMMATICALLY BASED ON HISTORICALLY AVAILABLE ELEVATION DATA. ACTUAL INVERT TO BE FIELD CONFIRMED

-EXISTING GROUND SURFACE ELEVATIONS TO BE CONFIRMED ON-SITE PRIOR TO START OF CONSTRUCTION AND REPORT ANY DISCREPANCIES TO THE ENGINEER.

-CONTRACTOR TO CONFIRM THE PRECISE ALIGNMENT, LOCATION, AND INVERT ELEVATIONS OF ALL EXISTING WATER, STORM, AND SANITARY SERVICES ON-SITE PRIOR TO CONSTRUCTION. ANY DISCREPANCIES FROM THE DESIGN DRAWINGS SHALL BE REPORTED TO THE ENGINEER IMMEDIATELY.

-PROPOSED WATER SERVICE TO BE INSTALLED 2.4m BELOW GROUND SURFACE. PROVIDE INSULATION WHERE SUFFICIENT COVER CAN NOT BE MAINTAINED.

-CONTRACTOR SHALL CARRY OUT ON-FIELD LOCATES TO IDENTIFY PRECISE LOCATION OF EXISTING SUB-SURFACE UTILITIES AND REPORT ANY CONFLICTS BETWEEN PROPOSED AND EXISTING SUB-SURFACE INFRASTRUCTURE.

-THE PROPOSED WATER SERVICE MUST MAINTAIN A MINIMUM HORIZONTAL SEPARATION OF 2.5m FROM ALL ADJACENT SEWERS. WHERE THIS HORIZONTAL SEPARATION CANNOT BE ACHIEVED, THE WATER SERVICE SHALL BE INSTALLED AT A MINIMUM VERTICAL CLEARANCE OF 0.5m ABOVE THE CROWN OF THE SEWER AT ITS HIGHEST POINT.

USE AND INTERPRETATION OF DRAWINGS

GENERAL CONDITIONS OF THE CONTRACT FOR CONSTRUCTION ARE PART OF THE CONTRACT DOCUMENTS AND DESCRIBE USE AND INTENT OF THE DRAWINGS. THE CONTRACT DOCUMENTS INCLUDE NOT ONLY THE DRAWINGS, BUT ALSO THE OWNER-CONTRACTOR AGREEMENTS, CONDITIONS OF THE CONTRACT, THE SPECIFICATIONS, ADDENDA, AND MODIFICATIONS ISSUED AFTER EXECUTION OF THE CONTRACT. THESE CONTRACT DOCUMENTS ARE COMPLEMENTARY, AND WHAT IS REQUIRED BY ANY ONE SHALL BE BINDING AS IF REQUIRED BY ALL. WORK NOT COMPLETELY DELINEATED HEREON SHALL BE CONSTRUCTED OF THE SAME MATERIALS AND DETAILED SIMILARLY AS WORK SHOWN MORE COMPLETELY ELSEWHERE IN THE CONTRACT DOCUMENTS.

BY USE OF THE DRAWINGS FOR CONSTRUCTION OF THE PROJECT, THE OWNER CONFIRMS THAT HE HAS REVIEWED AND APPROVED THE DRAWINGS. THE CONTRACTOR CONFIRMS THAT HE HAS VISITED THE SITE, FAMILIARIZED HIMSELF WITH THE LOCAL CONDITIONS, VERIFIED FIELD DIMENSIONS AND CORRELATED HIS OBSERVATIONS WITH THE REQUIREMENTS OF THE CONTRACT DOCUMENTS.

AS INSTRUMENTS OF SERVICE, ALL DRAWINGS, SPECIFICATIONS, CAD FILES OR OTHER ELECTRONIC MEDIA AND COPIED THERE OF FURNISHED BY THE ENGINEER ARE HIS PROPERTY. THEY ARE TO BE USED ONLY FOR THIS PROJECT AND ARE NOT TO BE USED ON ANY OTHER PROJECT, INCLUDING REPEATS OF THE PROJECT. CHANGES TO THE DRAWINGS MAY ONLY BE MADE BY THE ENGINEER.

UNLESS THE REVISION TITLE IS "ISSUED FOR CONSTRUCTION", THESE DRAWINGS SHALL BE CONSIDERED PRELIMINARY AND SHALL NOT BE USED AS A CONSTRUCTION DOCUMENT.

THESE DRAWINGS ILLUSTRATES THE WORK TO BE DONE. THE ENGINEER IS NOT RESPONSIBLE FOR THE MEANS, METHODS, TECHNIQUES, SEQUENCES, AND PROCEDURES USED TO DO THE WORK, OR THE SAFETY ASPECTS OF CONSTRUCTION, AND NOTHING ON THESE DRAWINGS EXPRESSED OR IMPLIED CHANGES THIS CONDITION. CONTRACTOR SHALL DETERMINE ALL CONDITIONS AT THE SITE AND SHALL BE RESPONSIBLE FOR KNOWING HOW THEY AFFECT THE WORK. SUBMITTAL OF A BID TO PERFORM THIS WORK IS ACKNOWLEDGEMENT OF THE RESPONSIBILITIES, AND THAT THEY HAVE BEEN FULLY CONSIDERED IN PLANNING OF THE WORK, AND THE BID PRICE. NO CLAIMS FOR EXTRA CHANGES DUE TO THESE CONDITIONS WILL BE FORTHCOMING.

UNAUTHORIZED CHANGES:

IN THE EVENT THE CLIENT, THE CLIENT'S CONTRACTORS OR SUBCONTRACTORS, OR ANYONE FOR WHOM THE CLIENT IS LEGALLY LIABLE MAKES OR PERMITS TO BE MADE ANY CHANGES TO ANY REPORTS, PLANS, SPECIFICATIONS OR OTHER CONSTRUCTION DOCUMENTS PREPARED BY LRL ASSOCIATES LTD. (LRL) WITHOUT OBTAINING LRL'S PRIOR WRITTEN CONSENT, THE CLIENT SHALL ASSUME FULL RESPONSIBILITY FOR THE RESULTS OF SUCH CHANGES. THEREFORE THE CLIENT AGREES TO WAIVE ANY CLAIM AGAINST LRL AND TO RELEASE LRL FROM ANY LIABILITY ARISING DIRECTLY OR INDIRECTLY FROM SUCH UNAUTHORIZED CHANGES.

IN ADDITION, THE CLIENT AGREES, TO THE FULLEST EXTENT PERMITTED BY LAW, TO INDEMNIFY AND HOLD HARMLESS LRL FROM ANY DAMAGES, LIABILITIES OR COST, INCLUDING REASONABLE ATTORNEY'S FEES AND COST OF DEFENSE, ARISING FROM SUCH CHANGES.

IN ADDITION, THE CLIENT AGREES TO INCLUDE IN ANY CONTRACTS FOR CONSTRUCTION APPROPRIATE LANGUAGE THAT PROHIBITS THE CONTRACTOR OR ANY SUBCONTRACTORS OF ANY TIER FROM MAKING ANY CHANGES OR MODIFICATIONS TO LRL'S CONSTRUCTION DOCUMENTS WITHOUT THE PRIOR WRITTEN APPROVAL OF LRL AND THAT FURTHER REQUIRES THE CONTRACTOR TO INDEMNIFY BOTH LRL AND THE CLIENT FROM ANY LIABILITY OR COST ARISING FROM SUCH CHANGES MADE WITHOUT SUCH PROPER AUTHORIZATION.

GENERAL NOTES:

EXISTING SERVICES AND UTILITIES SHOWN ON THESE DRAWINGS ARE TAKEN FROM THE BEST AVAILABLE RECORDS, BUT MAY NOT BE COMPLETE OR TO DATE. CONTRACTOR SHALL VERIFY IN FIELD FOR LOCATION AND ELEVATION OF PIPES AND CHECK WITH THE UTILITY COMPANIES BEFORE DIGGING OR PERFORMING WORK.

CONTRACTOR IS ADVISED TO COLLECT INFORMATION ON SOIL CONDITIONS BEFORE START OF CONSTRUCTION.

THE ENGINEER WAIVES ANY AND ALL RESPONSIBILITY AND LIABILITY FOR PROBLEMS WHICH ARISE FROM FAILURE TO FOLLOW THESE PLANS, SPECIFICATIONS AND THE DESIGN INTENT THEY CONVEY, OR FOR PROBLEMS WHICH ARISE FROM OTHERS' FAILURE TO OBTAIN AND/OR FOLLOW THE ENGINEER'S GUIDANCE WITH RESPECT TO ANY ERRORS, OMISSIONS, INCONSISTENCIES AMBIGUITIES OR CONFLICTS WHICH ARE ALLEGED.

CONTRACTOR TO VERIFY ALL DIMENSIONS AND NOTIFY THE ENGINEER OF ANY DISCREPANCIES BEFORE WORK COMMENCES. DO NOT SCALE DRAWINGS.

ADDITIONAL EROSION AND SEDIMENT CONTROL MEASURES, INCLUDING STRAW BALE BARRIERS AND TEMPORARY CHECK DAMS, SHALL BE INSTALLED WHERE REQUIRED TO INTERCEPT RUNOFF, REDUCE FLOW VELOCITIES, PROMOTE SEDIMENT SETTLEMENT, AND PROTECT DOWNSTREAM DRAINAGE SYSTEMS AND RECEIVING AREAS. THE TYPE, LOCATION, AND EXTENT OF THESE MEASURES SHALL BE ADJUSTED AS NECESSARY BASED ON SITE CONDITIONS AND THE PROGRESSION OF CONSTRUCTION ACTIVITIES.

No.	REVISIONS	BY	DATE
03	ISSUED FOR APPROVAL	S.V.	14 OCT. 2026
02	RE-ISSUED FOR APPROVAL	S.V.	13 FEB. 2026
01	ISSUED FOR SPC APPROVAL	S.V.	12 NOV. 2025

LICENSED PROFESSIONAL ENGINEER
V. JOHNSON
100510576
10-14-2026
PROVINCE OF ONTARIO

NOT AUTHENTIC UNLESS SIGNED AND DATED

LRL
ENGINEERING | INGÉNIERIE
5430 Canotek Road I Ottawa, ON, K1J 9G2
www.lrl.ca I (613) 842-3434

CLIENT
THEIA PARTNERS

DESIGNED BY:	DRAWN BY:	APPROVED BY:
S.V.	S.V.	V.J.

PROJECT
30 CLEARY AVENUE ODAYANHAWAY DEVELOPMENT
30 CLEARY AVENUE, OTTAWA, ON

FILE NO.	PLAN NO.
D07-12-25-0149	19403

DRAWING TITLE
PLAN AND PROFILE
PROP WATER SERVICE
STA. 0+000 TO 0+166

PROJECT NO.	
2631617	C501
DATE	
OCTOBER 2026	

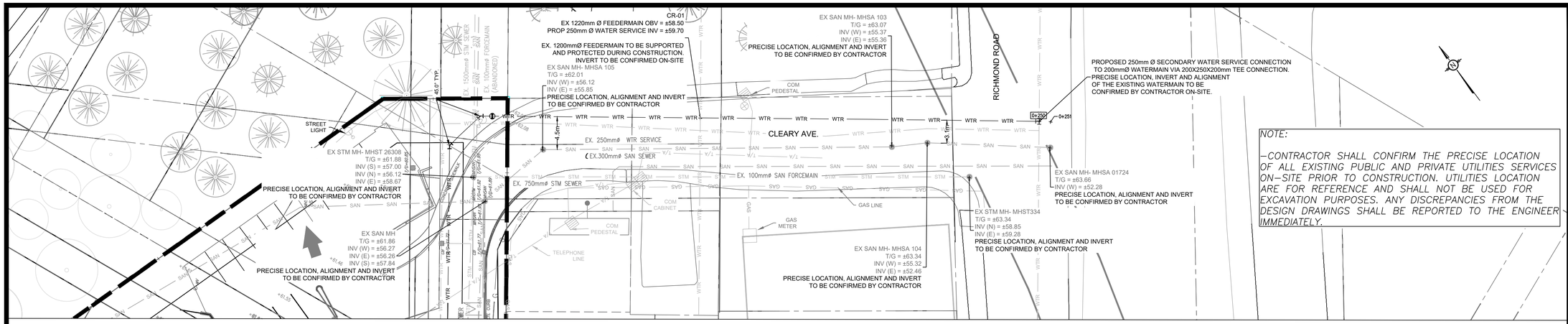

NOTE:

–CONTRACTOR SHALL CONFIRM THE PRECISE LOCATION OF ALL EXISTING PUBLIC AND PRIVATE UTILITIES SERVICES ON–SITE PRIOR TO CONSTRUCTION. UTILITIES LOCATION ARE FOR REFERENCE AND SHALL NOT BE USED FOR EXCAVATION PURPOSES. ANY DISCREPANCIES FROM THE DESIGN DRAWINGS SHALL BE REPORTED TO THE ENGINEER IMMEDIATELY.

H. SCALE: 1:300

5m 2 0 5 10m

SCALE: 1:300

V. SCALE: 1:30

0.5 0 1m

SCALE: 1:30

PROP WATER SERVICE STA. 0+165 TO 0+252

EXISTING CENTERLINE ELEVATION	61.72	61.82	62.00	62.12	62.29	62.72	63.23	63.28	63.44	63.71
PROPOSED TOP OF WATERMAIN	~~59.47~~	59.47	59.51 59.54 59.55	59.64	59.77	59.90	60.05	60.17	60.44	60.71	60.98	61.20

NOTE:

–PROPOSED WATER SERVICE HAS BEEN DESIGNED WITH ASSUMED ELEVATION BASED ON BEST AVAILABLE INFORMATION. DESIGN SUBJECT TO ADJUSTMENT IN THE FIELD PENDING CONFIRMATION OF EXISTING INVERT ELEVATIONS.

– PROFILE OF EXISTING STORM/SANITARY/WATERMAIN SHOWN DIAGRAMMATICALLY BASED ON HISTORICALLY AVAILABLE ELEVATION DATA. ACTUAL INVERT TO BE FIELD CONFIRMED.

–EXISTING GROUND SURFACE ELEVATIONS TO BE CONFIRMED ON–SITE PRIOR TO START OF CONSTRUCTION AND REPORT ANY DISCREPANCIES TO THE ENGINEER.

–CONTRACTOR TO CONFIRM THE PRECISE ALIGNMENT, LOCATION, AND INVERT ELEVATIONS OF ALL EXISTING WATER, STORM, AND SANITARY SERVICES ON–SITE PRIOR TO CONSTRUCTION. ANY DISCREPANCIES FROM THE DESIGN DRAWINGS SHALL BE REPORTED TO THE ENGINEER IMMEDIATELY.

–PROPOSED WATER SERVICE TO BE INSTALLED 2.4m BELOW GROUND SURFACE. PROVIDE INSULATION WHERE SUFFICIENT COVER CAN NOT BE MAINTAINED.

–CONTRACTOR SHALL CARRY OUT ON–FIELD LOCATES TO IDENTIFY PRECISE LOCATION OF EXISTING SUB–SURFACE UTILITIES AND REPORT ANY CONFLICTS BETWEEN PROPOSED AND EXISTING SUB–SURFACE INFRASTRUCTURE.

–THE PROPOSED WATER SERVICE MUST MAINTAIN A MINIMUM HORIZONTAL SEPARATION OF 2.5m FROM ALL ADJACENT SEWERS.
WHERE THIS HORIZONTAL SEPARATION CANNOT BE ACHIEVED, THE WATER SERVICE SHALL BE INSTALLED AT A MINIMUM VERTICAL CLEARANCE OF 0.5m ABOVE THE CROWN OF THE SEWER AT ITS HIGHEST POINT.

USE AND INTERPRETATION OF DRAWINGS

GENERAL CONDITIONS OF THE CONTRACT FOR CONSTRUCTION ARE PART OF THE CONTRACT DOCUMENTS AND DESCRIBE USE AND INTENT OF THE DRAWING. THE CONTRACT DOCUMENTS INCLUDE NOT ONLY THE DRAWINGS, BUT ALSO THE OWNER-CONTRACTOR AGREEMENTS, CONDITIONS OF THE CONTRACT, THE SPECIFICATIONS, ADDENDA, AND MODIFICATIONS ISSUED AFTER EXECUTION OF THE CONTRACT. THESE CONTRACT DOCUMENTS ARE COMPLEMENTARY, AND WHAT IS REQUIRED BY ANY ONE SHALL BE BINDING AS IF REQUIRED BY ALL. WORK NOT COMPLETELY DELINEATED HEREON SHALL BE CONSTRUCTED OF THE SAME MATERIALS AND DETAILED SIMILARLY AS WORK SHOWN MORE COMPLETELY ELSEWHERE IN THE CONTRACT DOCUMENTS.

BY USE OF THE DRAWINGS FOR CONSTRUCTION OF THE PROJECT, THE OWNER CONFIRMS THAT HE HAS REVIEWED AND APPROVED THE DRAWINGS. THE CONTRACTOR CONFIRMS THAT HE HAS VISITED THE SITE, FAMILIARIZED HIMSELF WITH THE LOCAL CONDITIONS, VERIFIED FIELD DIMENSIONS AND CORRELATED HIS OBSERVATIONS WITH THE REQUIREMENTS OF THE CONTRACT DOCUMENTS.

AS INSTRUMENTS OF SERVICE, ALL DRAWINGS, SPECIFICATIONS, CAD FILES OR OTHER ELECTRONIC MEDIA AND COPIED THERE OF FURNISHED BY THE ENGINEER ARE HIS PROPERTY. THEY ARE TO BE USED ONLY FOR THIS PROJECT AND ARE NOT TO BE USED ON ANY OTHER PROJECT, INCLUDING REPEATS OF THE PROJECT. CHANGES TO THE DRAWINGS MAY ONLY BE MADE BY THE ENGINEER.

UNLESS THE REVISION TITLE IS "ISSUED FOR CONSTRUCTION", THESE DRAWINGS SHALL BE CONSIDERED PRELIMINARY AND SHALL NOT BE USED AS A CONSTRUCTION DOCUMENT.

THESE DRAWINGS ILLUSTRATES THE WORK TO BE DONE. THE ENGINEER IS NOT RESPONSIBLE FOR THE MEANS, METHODS, TECHNIQUES, SEQUENCES, AND PROCEDURES USED TO DO THE WORK, OR THE SAFETY ASPECTS OF CONSTRUCTION, AND NOTHING ON THESE DRAWINGS EXPRESSED OR IMPLIED CHANGES THIS CONDITION. CONTRACTOR SHALL DETERMINE ALL CONDITIONS AT THE SITE AND SHALL BE RESPONSIBLE FOR KNOWING HOW THEY AFFECT THE WORK. SUBMITTAL OF A BID TO PERFORM THIS WORK IS ACKNOWLEDGEMENT OF THE RESPONSIBILITIES, AND THAT THEY HAVE BEEN FULLY CONSIDERED IN PLANNING OF THE WORK, AND THE BID PRICE. NO CLAIMS FOR EXTRA CHANGES DUE TO THESE CONDITIONS WILL BE FORTHCOMING.

UNAUTHORIZED CHANGES:

IN THE EVENT THE CLIENT, THE CLIENT'S CONTRACTORS OR SUBCONTRACTORS, OR ANYONE FOR WHOM THE CLIENT IS LEGALLY LIABLE MAKES OR PERMITS TO BE MADE ANY CHANGES TO ANY REPORTS, PLANS, SPECIFICATIONS OR OTHER CONSTRUCTION DOCUMENTS PREPARED BY LRL ASSOCIATES LTD. (LRL) WITHOUT OBTAINING LRL'S PRIOR WRITTEN CONSENT, THE CLIENT SHALL ASSUME FULL RESPONSIBILITY FOR THE RESULTS OF SUCH CHANGES, THEREFORE THE CLIENT AGREES TO WAIVE ANY CLAIM AGAINST LRL AND TO RELEASE LRL FROM ANY LIABILITY ARISING DIRECTLY OR INDIRECTLY FROM SUCH UNAUTHORIZED CHANGES.

IN ADDITION, THE CLIENT AGREES, TO THE FULLEST EXTENT PERMITTED BY LAW, TO INDEMNIFY AND HOLD HARMLESS LRL FROM ANY DAMAGES, LIABILITIES OR COST, INCLUDING REASONABLE ATTORNEY'S FEES AND COST OF DEFENSE, ARISING FROM SUCH CHANGES.

IN ADDITION, THE CLIENT AGREES TO INCLUDE IN ANY CONTRACTS FOR CONSTRUCTION APPROPRIATE LANGUAGE THAT PROHIBITS THE CONTRACTOR OR ANY SUBCONTRACTORS OF ANY TIER FROM MAKING ANY CHANGES OR MODIFICATIONS TO LRL'S CONSTRUCTION DOCUMENTS WITHOUT THE PRIOR WRITTEN APPROVAL OF LRL AND THAT FURTHER REQUIRES THE CONTRACTOR TO INDEMNIFY BOTH LRL AND THE CLIENT FROM ANY LIABILITY OR COST ARISING FROM SUCH CHANGES MADE WITHOUT SUCH PROPER AUTHORIZATION.

GENERAL NOTES:

EXISTING SERVICES AND UTILITIES SHOWN ON THESE DRAWINGS ARE TAKEN FROM THE BEST AVAILABE RECORDS, BUT MAY NOT BE COMPLETE OR TO DATE. CONTRACTOR SHALL VERIFY IN FIELD FOR LOCATION AND ELEVATION OF PIPES AND CHECK WITH THE UTILITY COMPANIES BEFORE DIGGING OR PERFORMING WORK.

CONTRACTOR IS ADVISED TO COLLECT INFORMATION ON SOIL CONDITIONS BEFORE START OF CONSTRUCTION.

THE ENGINEER WAIVES ANY AND ALL RESPONSIBILITY AND LIABILITY FOR PROBLEMS WHICH ARISE FROM FAILURE TO FOLLOW THESE PLANS, SPECIFICATIONS AND THE DESIGN INTENT THEY CONVEY, OR FOR PROBLEMS WHICH ARISE FROM OTHERS' FAILURE TO OBTAIN AND/OR FOLLOW THE ENGINEER'S GUIDANCE WITH RESPECT TO ANY ERRORS, OMISSIONS, INCONSISTENCIES AMBIGUITIES OR CONFLICTS WHICH ARE ALLEGED.

CONTRACTOR TO VERIFY ALL DIMENSIONS AND NOTIFY THE ENGINEER OF ANY DISCREPANCIES BEFORE WORK COMMENCES. DO NOT SCALE DRAWINGS.

ADDITIONAL EROSION AND SEDIMENT CONTROL MEASURES, INCLUDING STRAW BALE BARRIERS AND TEMPORARY CHECK DAMS, SHALL BE INSTALLED WHERE REQUIRED TO INTERCEPT RUNOFF, REDUCE FLOW VELOCITIES, PROMOTE SEDIMENT SETTLEMENT, AND PROTECT DOWNSTREAM DRAINAGE SYSTEMS AND RECEIVING AREAS. THE TYPE, LOCATION, AND EXTENT OF THESE MEASURES SHALL BE ADJUSTED AS NECESSARY BASED ON SITE CONDITIONS AND THE PROGRESSION OF CONSTRUCTION ACTIVITIES.

No.	REVISIONS	BY	DATE
03	ISSUED FOR APPROVAL	S.V.	14 OCT. 2026
02	RE-ISSUED FOR APPROVAL	S.V.	13 FEB. 2026
01	ISSUED FOR SPC APPROVAL	S.V.	12 NOV. 2025

LICENSED PROFESSIONAL ENGINEER
V. JOHNSON
100510576
10-14-2026
PROVINCE OF ONTARIO

NOT AUTHENTIC UNLESS SIGNED AND DATED

LRL
ENGINEERING | INGÉNIERIE
5430 Canotek Road I Ottawa, ON, K1J 9G2
www.lrl.ca I (613) 842-3434

CLIENT
THEIA PARTNERS

DESIGNED BY:	DRAWN BY:	APPROVED BY:
S.V.	S.V.	V.J.

PROJECT
30 CLEARY AVENUE ODAYANHAWAY DEVELOPMENT
30 CLEARY AVENUE, OTTAWA, ON

FILE NO. D07-12-25-0149
PLAN NO. 19403

DRAWING TITLE
PLAN AND PROFILE
PROP WATER SERVICE
STA. 0+165 TO 0+252

PROJECT NO. 2631617
DATE OCTOBER 2026

C502

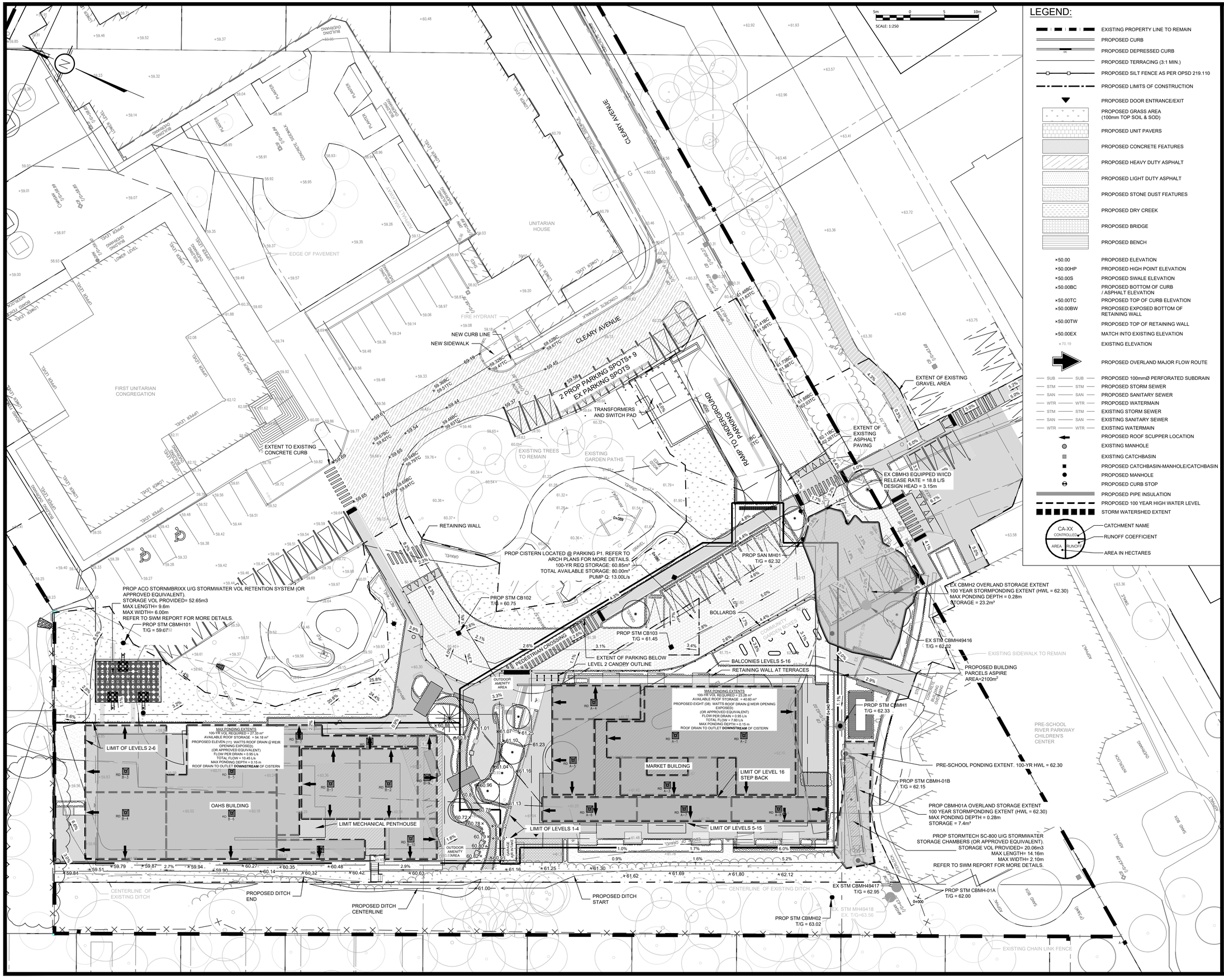

LEGEND:

- EXISTING PROPERTY LINE TO REMAIN
- PROPOSED CURB
- PROPOSED DEPRESSED CURB
- PROPOSED TERRACING (3:1 MIN.)
- PROPOSED SILT FENCE AS PER OPSD 219.110
- PROPOSED LIMITS OF CONSTRUCTION
- PROPOSED DOOR ENTRANCE/EXIT
- PROPOSED GRASS AREA (100mm TOP SOIL & SOD)
- PROPOSED UNIT PAVERS
- PROPOSED CONCRETE FEATURES
- PROPOSED HEAVY DUTY ASPHALT
- PROPOSED LIGHT DUTY ASPHALT
- PROPOSED STONE DUST FEATURES
- PROPOSED DRY CREEK
- PROPOSED BRIDGE
- PROPOSED BENCH
- ×50.00 PROPOSED ELEVATION
- ×50.00HP PROPOSED HIGH POINT ELEVATION
- ×50.00S PROPOSED SWALE ELEVATION
- ×50.00BC PROPOSED BOTTOM OF CURB / ASPHALT ELEVATION
- ×50.00TC PROPOSED TOP OF CURB ELEVATION
- ×50.00BW PROPOSED EXPOSED BOTTOM OF RETAINING WALL
- ×50.00TW PROPOSED TOP OF RETAINING WALL
- ×50.00EX MATCH INTO EXISTING ELEVATION
- ×70.19 EXISTING ELEVATION
- PROPOSED OVERLAND MAJOR FLOW ROUTE
- SUB PROPOSED 100mmØ PERFORATED SUBDRAIN
- STM PROPOSED STORM SEWER
- SAN PROPOSED SANITARY SEWER
- WTR PROPOSED WATERMAIN
- STM EXISTING STORM SEWER
- SAN EXISTING SANITARY SEWER
- WTR EXISTING WATERMAIN
- PROPOSED ROOF SCUPPER LOCATION
- EXISTING MANHOLE
- EXISTING CATCHBASIN
- PROPOSED CATCHBASIN-MANHOLE/CATCHBASIN
- PROPOSED MANHOLE
- PROPOSED CURB STOP
- PROPOSED PIPE INSULATION
- PROPOSED 100 YEAR HIGH WATER LEVEL
- STORM WATERSHED EXTENT
- CA-XX (CONTROLLER) — CATCHMENT NAME
- RUNOFF COEFFICIENT
- AREA (AREA) IN HECTARES

USE AND INTERPRETATION OF DRAWINGS

GENERAL CONDITIONS OF THE CONTRACT FOR CONSTRUCTION ARE PART OF THE CONTRACT DOCUMENTS AND DESCRIBE USE AND INTENT OF THE DRAWING. THE CONTRACT DOCUMENTS INCLUDE NOT ONLY THE DRAWINGS, BUT ALSO THE OWNER-CONTRACTOR AGREEMENTS, CONDITIONS OF THE CONTRACT, THE SPECIFICATIONS, ADDENDA, AND MODIFICATIONS ISSUED AFTER EXECUTION OF THE CONTRACT. THESE CONTRACT DOCUMENTS ARE COMPLEMENTARY, AND WHAT IS REQUIRED BY ANY ONE SHALL BE BINDING AS IF REQUIRED BY ALL. WORK NOT COMPLETELY DELINEATED HEREON SHALL BE CONSTRUCTED OF THE SAME MATERIALS AND DETAILED SIMILARLY AS WORK SHOWN MORE COMPLETELY ELSEWHERE IN THE CONTRACT DOCUMENTS.

BY USE OF THE DRAWINGS FOR CONSTRUCTION OF THE PROJECT, THE OWNER CONFIRMS THAT HE HAS REVIEWED AND APPROVED THE DRAWINGS. THE CONTRACTOR CONFIRMS THAT HE HAS VISITED THE SITE, FAMILIARIZED HIMSELF WITH THE LOCAL CONDITIONS, VERIFIED FIELD DIMENSIONS AND CORRELATED HIS OBSERVATIONS WITH THE REQUIREMENTS OF THE CONTRACT DOCUMENTS.

AS INSTRUMENTS OF SERVICE, ALL DRAWINGS, SPECIFICATIONS, CAD FILES OR OTHER ELECTRONIC MEDIA AND COPIED THERE OF FURNISHED BY THE ENGINEER ARE HIS PROPERTY. THEY ARE TO BE USED ONLY FOR THIS PROJECT AND ARE NOT TO BE USED ON ANY OTHER PROJECT, INCLUDING REPEATS OF THE PROJECT. CHANGES TO THE DRAWINGS MAY ONLY BE MADE BY THE ENGINEER.

UNLESS THE REVISION TITLE IS "ISSUED FOR CONSTRUCTION", THESE DRAWINGS SHALL BE CONSIDERED PRELIMINARY AND SHALL NOT BE USED AS A CONSTRUCTION DOCUMENT.

THESE DRAWINGS ILLUSTRATES THE WORK TO BE DONE. THE ENGINEER IS NOT RESPONSIBLE FOR THE MEANS, METHODS, TECHNIQUES, SEQUENCES, AND PROCEDURES USED TO DO THE WORK, OR THE SAFETY ASPECTS OF CONSTRUCTION, AND NOTHING ON THESE DRAWINGS EXPRESSED OR IMPLIED CHANGES THIS CONDITION. CONTRACTOR SHALL DETERMINE ALL CONDITIONS AT THE SITE AND SHALL BE RESPONSIBLE FOR KNOWING HOW THEY AFFECT THE WORK. SUBMITTAL OF A BID TO PERFORM THIS WORK IS ACKNOWLEDGEMENT OF THE RESPONSIBILITIES, AND THAT THEY HAVE BEEN FULLY CONSIDERED IN PLANNING OF THE WORK, AND THE BID PRICE. NO CLAIMS FOR EXTRA CHANGES DUE TO THESE CONDITIONS WILL BE FORTHCOMING.

UNAUTHORIZED CHANGES:

IN THE EVENT THE CLIENT, THE CLIENT'S CONTRACTORS OR SUBCONTRACTORS, OR ANYONE FOR WHOM THE CLIENT IS LEGALLY LIABLE MAKES OR PERMITS TO BE MADE ANY CHANGES TO ANY REPORTS, PLANS, SPECIFICATIONS OR OTHER CONSTRUCTION DOCUMENTS PREPARED BY LRL ASSOCIATES LTD. (LRL) WITHOUT OBTAINING LRL'S PRIOR WRITTEN CONSENT, THE CLIENT SHALL ASSUME FULL RESPONSIBILITY FOR THE RESULTS OF SUCH CHANGES, THEREFORE THE CLIENT AGREES TO WAIVE ANY CLAIM AGAINST LRL AND TO RELEASE LRL FROM ANY LIABILITY ARISING DIRECTLY OR INDIRECTLY FROM SUCH UNAUTHORIZED CHANGES.

IN ADDITION, THE CLIENT AGREES, TO THE FULLEST EXTENT PERMITTED BY LAW, TO INDEMNIFY AND HOLD HARMLESS LRL FROM ANY DAMAGES, LIABILITIES OR COST, INCLUDING REASONABLE ATTORNEY'S FEES AND COST OF DEFENSE, ARISING FROM SUCH CHANGES.

IN ADDITION, THE CLIENT AGREES TO INCLUDE IN ANY CONTRACTS FOR CONSTRUCTION APPROPRIATE LANGUAGE THAT PROHIBITS THE CONTRACTOR OR ANY SUBCONTRACTORS OF ANY TIER FROM MAKING ANY CHANGES OR MODIFICATIONS TO LRL'S CONSTRUCTION DOCUMENTS WITHOUT THE PRIOR WRITTEN APPROVAL OF LRL AND THAT FURTHER REQUIRES THE CONTRACTOR TO INDEMNIFY BOTH LRL AND THE CLIENT FROM ANY LIABILITY OR COST ARISING FROM SUCH CHANGES MADE WITHOUT SUCH PROPER AUTHORIZATION.

GENERAL NOTES:

EXISTING SERVICES AND UTILITIES SHOWN ON THESE DRAWINGS ARE TAKEN FROM THE BEST AVAILABLE RECORDS, BUT MAY NOT BE COMPLETE OR TO DATE. CONTRACTOR SHALL VERIFY IN FIELD FOR LOCATION AND ELEVATION OF PIPES AND CHECK WITH THE UTILITY COMPANIES BEFORE DIGGING OR PERFORMING WORK.

CONTRACTOR IS ADVISED TO COLLECT INFORMATION ON SOIL CONDITIONS BEFORE START OF CONSTRUCTION.

THE ENGINEER WAIVES ANY AND ALL RESPONSIBILITY AND LIABILITY FOR PROBLEMS WHICH ARISE FROM FAILURE TO FOLLOW THESE PLANS, SPECIFICATIONS AND THE DESIGN INTENT THEY CONVEY, OR FOR PROBLEMS WHICH ARISE FROM OTHERS' FAILURE TO OBTAIN AND/OR FOLLOW THE ENGINEER'S GUIDANCE WITH RESPECT TO ANY ERRORS, OMISSIONS, INCONSISTENCIES AMBIGUITIES OR CONFLICTS WHICH ARE ALLEGED.

CONTRACTOR TO VERIFY ALL DIMENSIONS AND NOTIFY THE ENGINEER OF ANY DISCREPANCIES BEFORE WORK COMMENCES. DO NOT SCALE DRAWINGS.

ADDITIONAL EROSION AND SEDIMENT CONTROL MEASURES, INCLUDING STRAW BALE BARRIERS AND TEMPORARY CHECK DAMS, SHALL BE INSTALLED WHERE REQUIRED TO INTERCEPT RUNOFF, REDUCE FLOW VELOCITIES, PROMOTE SEDIMENT SETTLEMENT, AND PROTECT DOWNSTREAM DRAINAGE SYSTEMS AND RECEIVING AREAS. THE TYPE, LOCATION, AND EXTENT OF THESE MEASURES SHALL BE ADJUSTED AS NECESSARY BASED ON SITE CONDITIONS AND THE PROGRESSION OF CONSTRUCTION ACTIVITIES.

No.	REVISIONS	BY	DATE
03	ISSUED FOR APPROVAL	S.V.	14 OCT. 2026
02	RE-ISSUED FOR APPROVAL	S.V.	13 FEB. 2026
01	ISSUED FOR SPC APPROVAL	S.V.	12 NOV. 2025

LICENSED PROFESSIONAL ENGINEER
V. JOHNSON
100510576
10-14-2026
PROVINCE OF ONTARIO

NOT AUTHENTIC UNLESS SIGNED AND DATED

LRL
ENGINEERING | INGÉNIERIE
5430 Canotek Road | Ottawa, ON, K1J 9G2
www.lrl.ca | (613) 842-3434

CLIENT
THEIA PARTNERS

DESIGNED BY:	DRAWN BY:	APPROVED BY:
S.V.	S.V.	V.J.

PROJECT
30 CLEARY AVENUE ODAYANHAWAY DEVELOPMENT
30 CLEARY AVENUE, OTTAWA, ON

FILE NO.	PLAN NO.
D07-12-25-0149	19403

DRAWING TITLE
STORMWATER MANAGEMENT PLAN

PROJECT NO.
2631617

DATE
OCTOBER 2026

C601

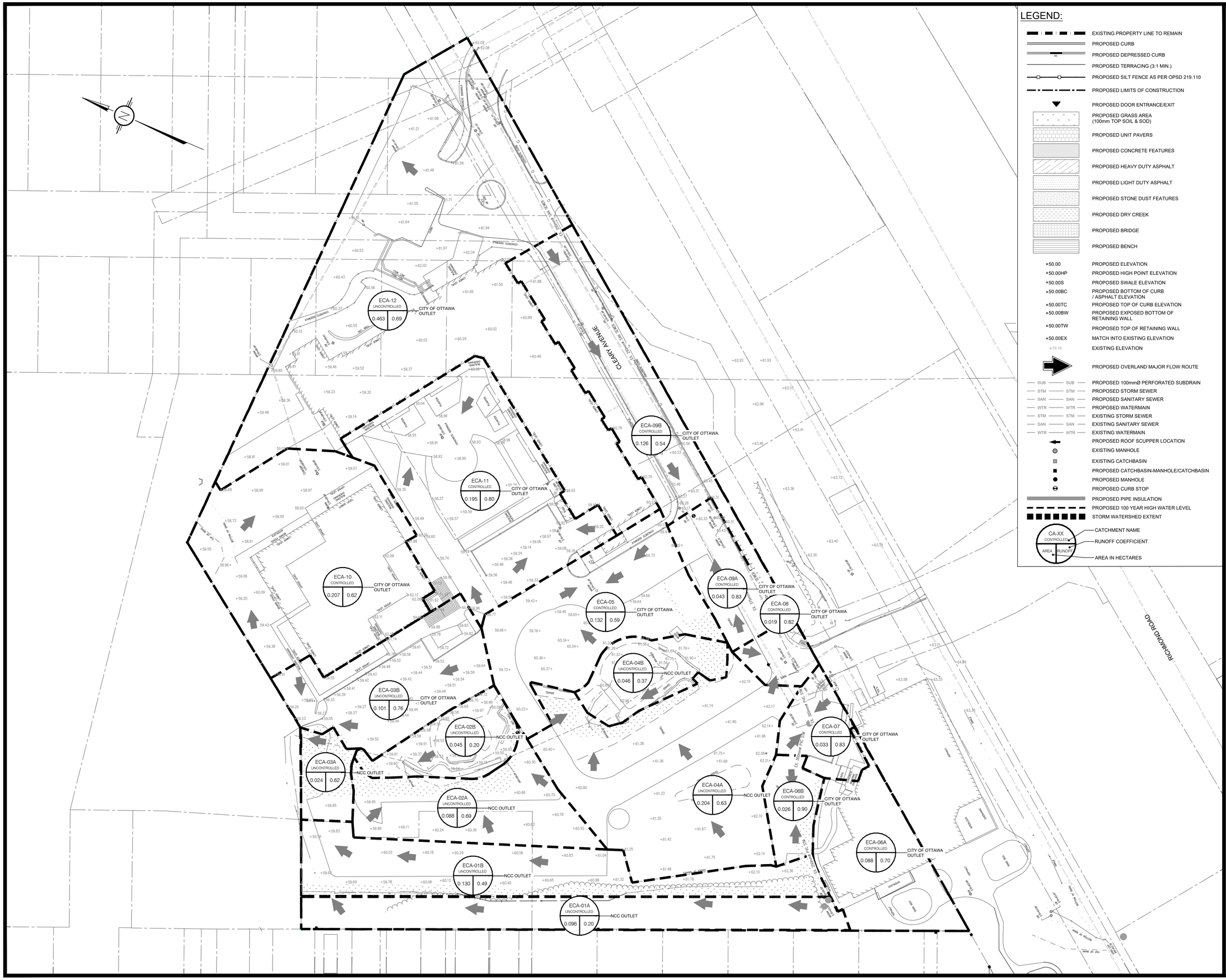

LEGEND:

- EXISTING PROPERTY LINE TO REMAIN
- PROPOSED CURB
- PROPOSED DEPRESSED CURB
- PROPOSED TERRACING (3:1 MIN.)
- PROPOSED SILT FENCE AS PER OPSD 219.110
- PROPOSED LIMITS OF CONSTRUCTION
- PROPOSED DOOR ENTRANCE/EXIT
- PROPOSED GRASS AREA (100mm TOP SOIL & SOD)
- PROPOSED UNIT PAVERS
- PROPOSED CONCRETE FEATURES
- PROPOSED HEAVY DUTY ASPHALT
- PROPOSED LIGHT DUTY ASPHALT
- PROPOSED STONE DUST FEATURES
- PROPOSED DRY CREEK
- PROPOSED BRIDGE
- PROPOSED BENCH
- ×50.00 PROPOSED ELEVATION
- ×50.00HP PROPOSED HIGH POINT ELEVATION
- ×50.00S PROPOSED SWALE ELEVATION
- ×50.00BC PROPOSED BOTTOM OF CURB / ASPHALT ELEVATION
- ×50.00TC PROPOSED TOP OF CURB ELEVATION
- ×50.00BW PROPOSED EXPOSED BOTTOM OF RETAINING WALL
- ×50.00TW PROPOSED TOP OF RETAINING WALL
- ×50.00EX MATCH INTO EXISTING ELEVATION
- ×70.19 EXISTING ELEVATION
- PROPOSED OVERLAND MAJOR FLOW ROUTE
- SUB SUB PROPOSED 100mmØ PERFORATED SUBDRAIN
- STM STM PROPOSED STORM SEWER
- SAN SAN PROPOSED SANITARY SEWER
- WTR WTR PROPOSED WATERMAIN
- STM STM EXISTING STORM SEWER
- SAN SAN EXISTING SANITARY SEWER
- WTR WTR EXISTING WATERMAIN
- PROPOSED ROOF SCUPPER LOCATION
- EXISTING MANHOLE
- EXISTING CATCHBASIN
- PROPOSED CATCHBASIN-MANHOLE/CATCHBASIN
- PROPOSED MANHOLE
- PROPOSED CURB STOP
- PROPOSED PIPE INSULATION
- PROPOSED 100 YEAR HIGH WATER LEVEL
- STORM WATERSHED EXTENT
- CA-XX CONTROLLED / AREA / RUNOFF — CATCHMENT NAME / RUNOFF COEFFICIENT / AREA IN HECTARES

USE AND INTERPRETATION OF DRAWINGS

GENERAL CONDITIONS OF THE CONTRACT FOR CONSTRUCTION ARE PART OF THE CONTRACT DOCUMENTS AND DESCRIBE USE AND INTENT OF THE DRAWING. THE CONTRACT DOCUMENTS INCLUDE NOT ONLY THE DRAWINGS, BUT ALSO THE OWNER-CONTRACTOR AGREEMENTS, CONDITIONS OF THE CONTRACT, THE SPECIFICATIONS, ADDENDA, AND MODIFICATIONS ISSUED AFTER EXECUTION OF THE CONTRACT. THESE CONTRACT DOCUMENTS ARE COMPLEMENTARY, AND WHAT IS REQUIRED BY ANY ONE SHALL BE BINDING AS IF REQUIRED BY ALL. WORK NOT COMPLETELY DELINEATED HEREON SHALL BE CONSTRUCTED OF THE SAME MATERIALS AND DETAILED SIMILARLY AS WORK SHOWN MORE COMPLETELY ELSEWHERE IN THE CONTRACT DOCUMENTS.

BY USE OF THE DRAWINGS FOR CONSTRUCTION OF THE PROJECT, THE OWNER CONFIRMS THAT HE HAS REVIEWED AND APPROVED THE DRAWINGS. THE CONTRACTOR CONFIRMS THAT HE HAS VISITED THE SITE, FAMILIARIZED HIMSELF WITH THE LOCAL CONDITIONS, VERIFIED FIELD DIMENSIONS AND CORRELATED HIS OBSERVATIONS WITH THE REQUIREMENTS OF THE CONTRACT DOCUMENTS.

AS INSTRUMENTS OF SERVICE, ALL DRAWINGS, SPECIFICATIONS, CAD FILES OR OTHER ELECTRONIC MEDIA AND COPIED THERE OF FURNISHED BY THE ENGINEER ARE HIS PROPERTY. THEY ARE TO BE USED ONLY FOR THIS PROJECT AND ARE NOT TO BE USED ON ANY OTHER PROJECT, INCLUDING REPEATS OF THE PROJECT. CHANGES TO THE DRAWINGS MAY ONLY BE MADE BY THE ENGINEER.

UNLESS THE REVISION TITLE IS "ISSUED FOR CONSTRUCTION", THESE DRAWINGS SHALL BE CONSIDERED PRELIMINARY AND SHALL NOT BE USED AS A CONSTRUCTION DOCUMENT.

THESE DRAWINGS ILLUSTRATES THE WORK TO BE DONE. THE ENGINEER IS NOT RESPONSIBLE FOR THE MEANS, METHODS, TECHNIQUES, SEQUENCES, AND PROCEDURES USED TO DO THE WORK, OR THE SAFETY ASPECTS OF CONSTRUCTION, AND NOTHING ON THESE DRAWINGS EXPRESSED OR IMPLIED CHANGES THIS CONDITION. CONTRACTOR SHALL DETERMINE ALL CONDITIONS AT THE SITE AND SHALL BE RESPONSIBLE FOR KNOWING HOW THEY AFFECT THE WORK. SUBMITTAL OF A BID TO PERFORM THIS WORK IS ACKNOWLEDGEMENT OF THE RESPONSIBILITIES, AND THAT THEY HAVE BEEN FULLY CONSIDERED IN PLANNING OF THE WORK, AND THE BID PRICE. NO CLAIMS FOR EXTRA CHANGES DUE TO THESE CONDITIONS WILL BE FORTHCOMING.

UNAUTHORIZED CHANGES:

IN THE EVENT THE CLIENT, THE CLIENT'S CONTRACTORS OR SUBCONTRACTORS, OR ANYONE FOR WHOM THE CLIENT IS LEGALLY LIABLE MAKES OR PERMITS TO BE MADE ANY CHANGES TO ANY REPORTS, PLANS, SPECIFICATIONS OR OTHER CONSTRUCTION DOCUMENTS PREPARED BY LRL ASSOCIATES LTD. (LRL) WITHOUT OBTAINING LRL'S PRIOR WRITTEN CONSENT, THE CLIENT SHALL ASSUME FULL RESPONSIBILITY FOR THE RESULTS OF SUCH CHANGES, THEREFORE THE CLIENT AGREES TO WAIVE ANY CLAIM AGAINST LRL AND TO RELEASE LRL FROM ANY LIABILITY ARISING DIRECTLY OR INDIRECTLY FROM SUCH UNAUTHORIZED CHANGES.

IN ADDITION, THE CLIENT AGREES, TO THE FULLEST EXTENT PERMITTED BY LAW, TO INDEMNIFY AND HOLD HARMLESS LRL FROM ANY DAMAGES, LIABILITIES OR COST, INCLUDING REASONABLE ATTORNEY'S FEES AND COST OF DEFENSE, ARISING FROM SUCH CHANGES.

IN ADDITION, THE CLIENT AGREES TO INCLUDE IN ANY CONTRACTS FOR CONSTRUCTION APPROPRIATE LANGUAGE THAT PROHIBITS THE CONTRACTOR OR ANY SUBCONTRACTORS OF ANY TIER FROM MAKING ANY CHANGES OR MODIFICATIONS TO LRL'S CONSTRUCTION DOCUMENTS WITHOUT THE PRIOR WRITTEN APPROVAL OF LRL AND THAT FURTHER REQUIRES THE CONTRACTOR TO INDEMNIFY BOTH LRL AND THE CLIENT FROM ANY LIABILITY OR COST ARISING FROM SUCH CHANGES MADE WITHOUT SUCH PROPER AUTHORIZATION.

GENERAL NOTES:

EXISTING SERVICES AND UTILITIES SHOWN ON THESE DRAWINGS ARE TAKEN FROM THE BEST AVAILABLE RECORDS, BUT MAY NOT BE COMPLETE OR TO DATE. CONTRACTOR SHALL VERIFY IN FIELD FOR LOCATION AND ELEVATION OF PIPES AND CHECK WITH THE UTILITY COMPANIES BEFORE DIGGING OR PERFORMING WORK.

CONTRACTOR IS ADVISED TO COLLECT INFORMATION ON SOIL CONDITIONS BEFORE START OF CONSTRUCTION.

THE ENGINEER WAIVES ANY AND ALL RESPONSIBILITY AND LIABILITY FOR PROBLEMS WHICH ARISE FROM FAILURE TO FOLLOW THESE PLANS, SPECIFICATIONS AND THE DESIGN INTENT THEY CONVEY, OR FOR PROBLEMS WHICH ARISE FROM OTHERS' FAILURE TO OBTAIN AND/OR FOLLOW THE ENGINEER'S GUIDANCE WITH RESPECT TO ANY ERRORS, OMISSIONS, INCONSISTENCIES AMBIGUITIES OR CONFLICTS WHICH ARE ALLEGED.

CONTRACTOR TO VERIFY ALL DIMENSIONS AND NOTIFY THE ENGINEER OF ANY DISCREPANCIES BEFORE WORK COMMENCES. DO NOT SCALE DRAWINGS.

ADDITIONAL EROSION AND SEDIMENT CONTROL MEASURES, INCLUDING STRAW BALE BARRIERS AND TEMPORARY CHECK DAMS, SHALL BE INSTALLED WHERE REQUIRED TO INTERCEPT RUNOFF, REDUCE FLOW VELOCITIES, PROMOTE SEDIMENT SETTLEMENT, AND PROTECT DOWNSTREAM DRAINAGE SYSTEMS AND RECEIVING AREAS. THE TYPE, LOCATION, AND EXTENT OF THESE MEASURES SHALL BE ADJUSTED AS NECESSARY BASED ON SITE CONDITIONS AND THE PROGRESSION OF CONSTRUCTION ACTIVITIES.

5m 0 10 20m

SCALE: 1:400

No.	REVISIONS	BY	DATE
03	ISSUED FOR APPROVAL	S.V.	14 OCT. 2026
02	RE-ISSUED FOR APPROVAL	S.V.	13 FEB. 2026
01	ISSUED FOR SPC APPROVAL	S.V.	12 NOV. 2025

LICENSED PROFESSIONAL ENGINEER
V. JOHNSON
100510576
10-14-2026
PROVINCE OF ONTARIO

NOT AUTHENTIC UNLESS SIGNED AND DATED

LRL
ENGINEERING | INGÉNIERIE
5430 Canotek Road | Ottawa, ON, K1J 9G2
www.lrl.ca | (613) 842-3434

CLIENT

THEIA PARTNERS

DESIGNED BY:	DRAWN BY:	APPROVED BY:
S.V.	S.V.	V.J.

PROJECT

30 CLEARY AVENUE ODAYANHAWAY DEVELOPMENT
30 CLEARY AVENUE, OTTAWA, ON

FILE NO.	PLAN NO.
D07-12-25-0149	19403

DRAWING TITLE

PRE-DEVELOPMENT WATERSHED PLAN

PROJECT NO.
2631617

DATE
OCTOBER 2026

C701

5m 0 10 20m

SCALE: 1:400

ROOF DRAIN SUMMARY TABLE					
DRAIN ID	CA-02A Roof-Controlled (Market Bldg)	CA-02B Roof-Controlled (Market Bldg)	CA-02C Roof-Controlled (Market Bldg)	CA-03A Roof-Controlled (OASH Bldg)	CA-03A Roof-Controlled (OASH Bldg)
CONFIGURATION NUMBER OF ROOF DRAINS	3	2	3	2	9
CONFIGURATION ROOF DRAIN MODEL	WATTS Roof Drain - ¼ Weir Opening Exposed	WATTS Roof Drain - ¼ Weir Opening Exposed	WATTS Roof Drain - ¼ Weir Opening Exposed	WATTS Roof Drain - ¼ Weir Opening Exposed	WATTS Roof Drain - ¼ Weir Opening Exposed
RELEASE RATE	2.85L/s	1.90L/s	2.85L/s	1.90L/s	8.55L/s
STORAGE REQUIRED	16.12m³	3.32m³	3.83m³	7.38m³	19.95m³
STORAGE PROVIDED	23.60m³	9.02m³	7.98m³	11.02m³	43.16m³
PONDING DEPTH	150mm	150mm	150 mm	150 mm	150 mm

LEGEND:

- EXISTING PROPERTY LINE TO REMAIN
- PROPOSED CURB
- PROPOSED DEPRESSED CURB
- PROPOSED TERRACING (3:1 MIN.)
- PROPOSED SILT FENCE AS PER OPSD 219.110
- PROPOSED LIMITS OF CONSTRUCTION
- PROPOSED DOOR ENTRANCE/EXIT
- PROPOSED GRASS AREA (100mm TOP SOIL & SOD)
- PROPOSED UNIT PAVERS
- PROPOSED CONCRETE FEATURES
- PROPOSED HEAVY DUTY ASPHALT
- PROPOSED LIGHT DUTY ASPHALT
- PROPOSED STONE DUST FEATURES
- PROPOSED DRY CREEK
- PROPOSED BRIDGE
- PROPOSED BENCH
- ×50.00 PROPOSED ELEVATION
- ×50.00HP PROPOSED HIGH POINT ELEVATION
- ×50.00S PROPOSED SWALE ELEVATION
- ×50.00BC PROPOSED BOTTOM OF CURB / ASPHALT ELEVATION
- ×50.00TC PROPOSED TOP OF CURB ELEVATION
- ×50.00BW PROPOSED EXPOSED BOTTOM OF RETAINING WALL
- ×50.00TW PROPOSED TOP OF RETAINING WALL
- ×50.00EX MATCH INTO EXISTING ELEVATION
- ×70.19 EXISTING ELEVATION
- PROPOSED OVERLAND MAJOR FLOW ROUTE
- SUB SUB PROPOSED 100mmØ PERFORATED SUBDRAIN
- STM STM PROPOSED STORM SEWER
- SAN SAN PROPOSED SANITARY SEWER
- WTR WTR PROPOSED WATERMAIN
- STM STM EXISTING STORM SEWER
- SAN SAN EXISTING SANITARY SEWER
- WTR WTR EXISTING WATERMAIN
- PROPOSED ROOF SCUPPER LOCATION
- EXISTING MANHOLE
- EXISTING CATCHBASIN
- PROPOSED CATCHBASIN-MANHOLE/CATCHBASIN
- PROPOSED MANHOLE
- PROPOSED CURB STOP
- PROPOSED PIPE INSULATION
- PROPOSED 100 YEAR HIGH WATER LEVEL
- STORM WATERSHED EXTENT
- CA-XX CONTROLLED AREA RUNOFF — CATCHMENT NAME, RUNOFF COEFFICIENT, AREA IN HECTARES

USE AND INTERPRETATION OF DRAWINGS

GENERAL CONDITIONS OF THE CONTRACT FOR CONSTRUCTION ARE PART OF THE CONTRACT DOCUMENTS AND DESCRIBE USE AND INTENT OF THE DRAWING. THE CONTRACT DOCUMENTS INCLUDE NOT ONLY THE DRAWINGS, BUT ALSO THE OWNER-CONTRACTOR AGREEMENTS, CONDITIONS OF THE CONTRACT, THE SPECIFICATIONS, ADDENDA, AND MODIFICATIONS ISSUED AFTER EXECUTION OF THE CONTRACT. THESE CONTRACT DOCUMENTS ARE COMPLEMENTARY, AND WHAT IS REQUIRED BY ANY ONE SHALL BE BINDING AS IF REQUIRED BY ALL. WORK NOT COMPLETELY DELINEATED HEREON SHALL BE CONSTRUCTED OF THE SAME MATERIALS AND DETAILED SIMILARLY AS WORK SHOWN MORE COMPLETELY ELSEWHERE IN THE CONTRACT DOCUMENTS.

BY USE OF THE DRAWINGS FOR CONSTRUCTION OF THE PROJECT, THE OWNER CONFIRMS THAT HE HAS REVIEWED AND APPROVED THE DRAWINGS. THE CONTRACTOR CONFIRMS THAT HE HAS VISITED THE SITE, FAMILIARIZED HIMSELF WITH THE LOCAL CONDITIONS, VERIFIED FIELD DIMENSIONS AND CORRELATED HIS OBSERVATIONS WITH THE REQUIREMENTS OF THE CONTRACT DOCUMENTS.

AS INSTRUMENTS OF SERVICE, ALL DRAWINGS, SPECIFICATIONS, CAD FILES OR OTHER ELECTRONIC MEDIA AND COPIED THERE OF FURNISHED BY THE ENGINEER ARE HIS PROPERTY. THEY ARE TO BE USED ONLY FOR THIS PROJECT AND ARE NOT TO BE USED ON ANY OTHER PROJECT, INCLUDING REPEATS OF THE PROJECT. CHANGES TO THE DRAWINGS MAY ONLY BE MADE BY THE ENGINEER.

UNLESS THE REVISION TITLE IS "ISSUED FOR CONSTRUCTION", THESE DRAWINGS SHALL BE CONSIDERED PRELIMINARY AND SHALL NOT BE USED AS A CONSTRUCTION DOCUMENT.

THESE DRAWINGS ILLUSTRATES THE WORK TO BE DONE. THE ENGINEER IS NOT RESPONSIBLE FOR THE MEANS, METHODS, TECHNIQUES, SEQUENCES, AND PROCEDURES USED TO DO THE WORK, OR THE SAFETY ASPECTS OF CONSTRUCTION, AND NOTHING ON THESE DRAWINGS EXPRESSED OR IMPLIED CHANGES THIS CONDITION. CONTRACTOR SHALL DETERMINE ALL CONDITIONS AT THE SITE AND SHALL BE RESPONSIBLE FOR KNOWING HOW THEY AFFECT THE WORK. SUBMITTAL OF A BID TO PERFORM THIS WORK IS ACKNOWLEDGEMENT OF THE RESPONSIBILITIES, AND THAT THEY HAVE BEEN FULLY CONSIDERED IN PLANNING OF THE WORK, AND THE BID PRICE. NO CLAIMS FOR EXTRA CHANGES DUE TO THESE CONDITIONS WILL BE FORTHCOMING.

UNAUTHORIZED CHANGES:

IN THE EVENT THE CLIENT, THE CLIENT'S CONTRACTORS OR SUBCONTRACTORS, OR ANYONE FOR WHOM THE CLIENT IS LEGALLY LIABLE MAKES OR PERMITS TO BE MADE ANY CHANGES TO ANY REPORTS, PLANS, SPECIFICATIONS OR OTHER CONSTRUCTION DOCUMENTS PREPARED BY LRL ASSOCIATES LTD. (LRL) WITHOUT OBTAINING LRL'S PRIOR WRITTEN CONSENT, THE CLIENT SHALL ASSUME FULL RESPONSIBILITY FOR THE RESULTS OF SUCH CHANGES, THEREFORE THE CLIENT AGREES TO WAIVE ANY CLAIM AGAINST LRL AND TO RELEASE LRL FROM ANY LIABILITY ARISING DIRECTLY OR INDIRECTLY FROM SUCH UNAUTHORIZED CHANGES.

IN ADDITION, THE CLIENT AGREES, TO THE FULLEST EXTENT PERMITTED BY LAW, TO INDEMNIFY AND HOLD HARMLESS LRL FROM ANY DAMAGES, LIABILITIES OR COST, INCLUDING REASONABLE ATTORNEY'S FEES AND COST OF DEFENSE, ARISING FROM SUCH CHANGES.

IN ADDITION, THE CLIENT AGREES TO INCLUDE IN ANY CONTRACTS FOR CONSTRUCTION APPROPRIATE LANGUAGE THAT PROHIBITS THE CONTRACTOR OR ANY SUBCONTRACTORS OF ANY TIER FROM MAKING ANY CHANGES OR MODIFICATIONS TO LRL'S CONSTRUCTION DOCUMENTS WITHOUT THE PRIOR WRITTEN APPROVAL OF LRL AND THAT FURTHER REQUIRES THE CONTRACTOR TO INDEMNIFY BOTH LRL AND THE CLIENT FROM ANY LIABILITY OR COST ARISING FROM SUCH CHANGES MADE WITHOUT SUCH PROPER AUTHORIZATION.

GENERAL NOTES:

EXISTING SERVICES AND UTILITIES SHOWN ON THESE DRAWINGS ARE TAKEN FROM THE BEST AVAILABLE RECORDS, BUT MAY NOT BE COMPLETE OR TO DATE. CONTRACTOR SHALL VERIFY IN FIELD FOR LOCATION AND ELEVATION OF PIPES AND CHECK WITH THE UTILITY COMPANIES BEFORE DIGGING OR PERFORMING WORK.

CONTRACTOR IS ADVISED TO COLLECT INFORMATION ON SOIL CONDITIONS BEFORE START OF CONSTRUCTION.

THE ENGINEER WAIVES ANY AND ALL RESPONSIBILITY AND LIABILITY FOR PROBLEMS WHICH ARISE FROM FAILURE TO FOLLOW THESE PLANS, SPECIFICATIONS AND THE DESIGN INTENT THEY CONVEY, OR FOR PROBLEMS WHICH ARISE FROM OTHERS' FAILURE TO OBTAIN AND/OR FOLLOW THE ENGINEER'S GUIDANCE WITH RESPECT TO ANY ERRORS, OMISSIONS, INCONSISTENCIES AMBIGUITIES OR CONFLICTS WHICH ARE ALLEGED.

CONTRACTOR TO VERIFY ALL DIMENSIONS AND NOTIFY THE ENGINEER OF ANY DISCREPANCIES BEFORE WORK COMMENCES. DO NOT SCALE DRAWINGS.

ADDITIONAL EROSION AND SEDIMENT CONTROL MEASURES, INCLUDING STRAW BALE BARRIERS AND TEMPORARY CHECK DAMS, SHALL BE INSTALLED WHERE REQUIRED TO INTERCEPT RUNOFF, REDUCE FLOW VELOCITIES, PROMOTE SEDIMENT SETTLEMENT, AND PROTECT DOWNSTREAM DRAINAGE SYSTEMS AND RECEIVING AREAS. THE TYPE, LOCATION, AND EXTENT OF THESE MEASURES SHALL BE ADJUSTED AS NECESSARY BASED ON SITE CONDITIONS AND THE PROGRESSION OF CONSTRUCTION ACTIVITIES.

No.	REVISIONS	BY	DATE
03	ISSUED FOR APPROVAL	S.V.	14 OCT. 2026
02	RE-ISSUED FOR APPROVAL	S.V.	13 FEB. 2026
01	ISSUED FOR SPC APPROVAL	S.V.	12 NOV. 2025

LICENSED PROFESSIONAL ENGINEER
V. JOHNSON
100510576
10-14-2026
PROVINCE OF ONTARIO

NOT AUTHENTIC UNLESS SIGNED AND DATED

LRL
ENGINEERING | INGÉNIERIE
5430 Canotek Road | Ottawa, ON, K1J 9G2
www.lrl.ca | (613) 842-3434

CLIENT
THEIA PARTNERS

DESIGNED BY:	DRAWN BY:	APPROVED BY:
S.V.	S.V.	V.J.

PROJECT
30 CLEARY AVENUE ODAYANHAWAY DEVELOPMENT
30 CLEARY AVENUE, OTTAWA, ON

FILE NO. D07-12-25-0149
PLAN NO. 19403

DRAWING TITLE
POST-DEVELOPMENT WATERSHED PLAN

PROJECT NO. 2631617
DATE OCTOBER 2026

C702

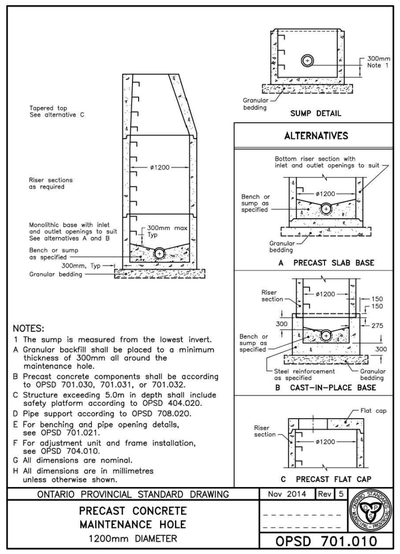

NOTES:
1 The sump is measured from the lowest invert.
A Granular backfill shall be placed to a minimum thickness of 300mm all around the maintenance hole.
B Precast concrete components shall be according to OPSD 701.030, 701.031, or 701.032.
C Structure exceeding 5.0m in depth shall include safety platform according to OPSD 404.020.
D Pipe support according to OPSD 708.020.
E For benching and pipe opening details, see OPSD 701.021.
F For adjustment unit and frame installation, see OPSD 704.010.
G All dimensions are nominal.
H All dimensions are in millimetres unless otherwise shown.

ONTARIO PROVINCIAL STANDARD DRAWING	Nov 2014	Rev 5
PRECAST CONCRETE MAINTENANCE HOLE 1200mm DIAMETER		
	OPSD 701.010	

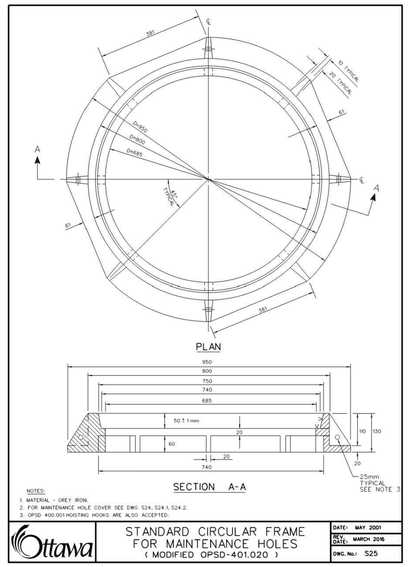

NOTES:
1. MATERIAL - GREY IRON.
2. FOR MAINTENANCE HOLE COVER SEE DWG S24, S24.1, S24.2.
3. OPSD 400.001 HOISTING HOOKS ARE ALSO ACCEPTED.

STANDARD CIRCULAR FRAME FOR MAINTENANCE HOLES (MODIFIED OPSD-401.020)	DATE: MAY 2001 REV. DATE: MARCH 2016 DWG. No.: S25

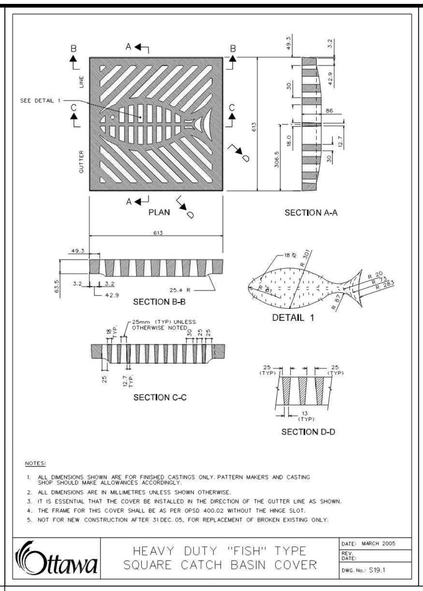

NOTES:
1. ALL DIMENSIONS SHOWN ARE FOR FINISHED CASTINGS ONLY; PATTERN MAKERS AND CASTING SHOP SHOULD MAKE ALLOWANCES ACCORDINGLY.
2. ALL DIMENSIONS ARE IN MILLIMETRES UNLESS SHOWN OTHERWISE.
3. IT IS ESSENTIAL THAT THE COVER BE INSTALLED IN THE DIRECTION OF THE GUTTER LINE AS SHOWN.
4. THE FRAME FOR THIS COVER SHALL BE AS PER OPSD 400.02 WITHOUT THE HINGE SLOT.
5. NOT FOR NEW CONSTRUCTION AFTER 31 DEC. 05, FOR REPLACEMENT OF BROKEN EXISTING ONLY.

HEAVY DUTY "FISH" TYPE SQUARE CATCH BASIN COVER	DATE: MARCH 2005 REV. DATE: DWG. No.: S19.1

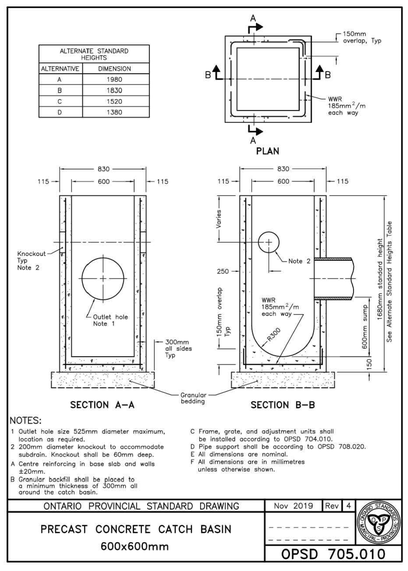

NOTES:
1 Outlet hole size 525mm diameter maximum, location as required.
2 200mm diameter knockout to accommodate subdrain. Knockout shall be 60mm deep.
A Centre reinforcing in base slab and walls ±20mm.
B Granular backfill shall be placed to a minimum thickness of 300mm all around the catch basin.
C Frame, grate, and adjustment units shall be installed according to OPSD 704.010.
D Pipe support shall be according to OPSD 708.020.
E All dimensions are nominal.
F All dimensions are in millimetres unless otherwise shown.

ONTARIO PROVINCIAL STANDARD DRAWING	Nov 2019	Rev 4
PRECAST CONCRETE CATCH BASIN 600x600mm		
	OPSD 705.010	

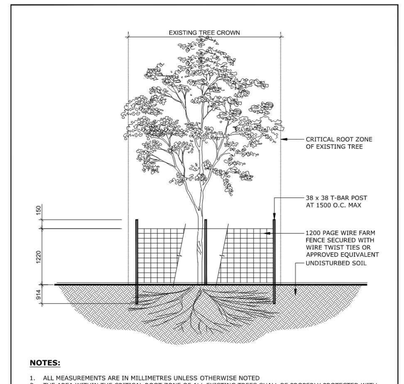

NOTES:
1. ALL MEASUREMENTS ARE IN MILLIMETRES UNLESS OTHERWISE NOTED
2. THE AREA WITHIN THE CRITICAL ROOT ZONE OF ALL EXISTING TREES SHALL BE PROPERLY PROTECTED WITH TEMPORARY FENCING AS PER THE APPROVED LANDSCAPE PLAN
3. THE SURVEY SHALL SHOW EXISTING ELEVATION AT BASE OF ALL TREES TO BE PRESERVED AS SHOWN BY "+"
4. THE AREA WITHIN THE PROTECTED FENCING SHALL REMAIN UNDISTURBED AND SHALL NOT BE USED FOR THE STORAGE OF BUILDING MATERIALS OR EQUIPMENT. REMOVE ALL DEBRIS
5. PRUNE BRANCHES TO REMOVE DAMAGED OR OBJECTIONABLE BRANCHES. DO NOT PRUNE LEADERS
6. TREE PROTECTION SHALL REMAIN UNTIL SUBSTANTIAL PERFORMANCE OF THE PROJECT
7. IF CUTTING OF ROOTS OR CHANGING OF GRADES AROUND EXISTING TREES IS CALLED FOR, FOLLOW APPROPRIATE DETAILS AS DIRECTED BY LANDSCAPE ARCHITECT
8. IF TREES ARE BEING AFFECTED BY CONSTRUCTION, A WATER AND FERTILIZING PROGRAM WILL BE REQUIRED TO THE SATISFACTION OF THE CITY

TREE PRESERVATION PROTECTION FENCE	DATE: FEB 2013 REV.: FEB2017 DWG No.: F7

USE AND INTERPRETATION OF DRAWINGS

GENERAL CONDITIONS OF THE CONTRACT FOR CONSTRUCTION ARE PART OF THE CONTRACT DOCUMENTS AND DESCRIBE USE AND INTENT OF THE DRAWING. THE CONTRACT DOCUMENTS INCLUDE NOT ONLY THE DRAWINGS, BUT ALSO THE OWNER-CONTRACTOR AGREEMENTS, CONDITIONS OF THE CONTRACT, THE SPECIFICATIONS, ADDENDA, AND MODIFICATIONS ISSUED AFTER EXECUTION OF THE CONTRACT. THESE CONTRACT DOCUMENTS ARE COMPLEMENTARY, AND WHAT IS REQUIRED BY ANY ONE SHALL BE BINDING AS IF REQUIRED BY ALL. WORK NOT COMPLETELY DELINEATED HEREON SHALL BE CONSTRUCTED OF THE SAME MATERIALS AND DETAILED SIMILARLY AS WORK SHOWN MORE COMPLETELY ELSEWHERE IN THE CONTRACT DOCUMENTS.

BY USE OF THE DRAWINGS FOR CONSTRUCTION OF THE PROJECT, THE OWNER CONFIRMS THAT HE HAS REVIEWED AND APPROVED THE DRAWINGS. THE CONTRACTOR CONFIRMS THAT HE HAS VISITED THE SITE, FAMILIARIZED HIMSELF WITH THE LOCAL CONDITIONS, VERIFIED FIELD DIMENSIONS AND CORRELATED HIS OBSERVATIONS WITH THE REQUIREMENTS OF THE CONTRACT DOCUMENTS.

AS INSTRUMENTS OF SERVICE, ALL DRAWINGS, SPECIFICATIONS, CAD FILES OR OTHER ELECTRONIC MEDIA AND COPIED THERE OF FURNISHED BY THE ENGINEER ARE HIS PROPERTY. THEY ARE TO BE USED ONLY FOR THIS PROJECT AND ARE NOT TO BE USED ON ANY OTHER PROJECT, INCLUDING REPEATS OF THE PROJECT. CHANGES TO THE DRAWINGS MAY ONLY BE MADE BY THE ENGINEER.

UNLESS THE REVISION TITLE IS "ISSUED FOR CONSTRUCTION", THESE DRAWINGS SHALL BE CONSIDERED PRELIMINARY AND SHALL NOT BE USED AS A CONSTRUCTION DOCUMENT.

THESE DRAWINGS ILLUSTRATES THE WORK TO BE DONE. THE ENGINEER IS NOT RESPONSIBLE FOR THE MEANS, METHODS, TECHNIQUES, SEQUENCES, AND PROCEDURES USED TO DO THE WORK, OR THE SAFETY ASPECTS OF CONSTRUCTION, AND NOTHING ON THESE DRAWINGS EXPRESSED OR IMPLIED CHANGES THIS CONDITION. CONTRACTOR SHALL DETERMINE ALL CONDITIONS AT THE SITE AND SHALL BE RESPONSIBLE FOR KNOWING HOW THEY AFFECT THE WORK. SUBMITTAL OF A BID TO PERFORM THIS WORK IS ACKNOWLEDGEMENT OF THE RESPONSIBILITIES, AND THAT THEY HAVE BEEN FULLY CONSIDERED IN PLANNING OF THE WORK, AND THE BID PRICE. NO CLAIMS FOR EXTRA CHANGES DUE TO THESE CONDITIONS WILL BE FORTHCOMING.

UNAUTHORIZED CHANGES:

IN THE EVENT THE CLIENT, THE CLIENT'S CONTRACTORS OR SUBCONTRACTORS, OR ANYONE FOR WHOM THE CLIENT IS LEGALLY LIABLE MAKES OR PERMITS TO BE MADE ANY CHANGES TO ANY REPORTS, PLANS, SPECIFICATIONS OR OTHER CONSTRUCTION DOCUMENTS PREPARED BY LRL ASSOCIATES LTD. (LRL) WITHOUT OBTAINING LRL'S PRIOR WRITTEN CONSENT, THE CLIENT SHALL ASSUME FULL RESPONSIBILITY FOR THE RESULTS OF SUCH CHANGES, THEREFORE THE CLIENT AGREES TO WAIVE ANY CLAIM AGAINST LRL AND TO RELEASE LRL FROM ANY LIABILITY ARISING DIRECTLY OR INDIRECTLY FROM SUCH UNAUTHORIZED CHANGES.

IN ADDITION, THE CLIENT AGREES TO THE FULLEST EXTENT PERMITTED BY LAW, TO INDEMNIFY AND HOLD HARMLESS LRL FROM ANY DAMAGES, LIABILITIES OR COST, INCLUDING REASONABLE ATTORNEY'S FEES AND COST OF DEFENSE, ARISING FROM SUCH CHANGES.

IN ADDITION, THE CLIENT AGREES TO INCLUDE IN ANY CONTRACTS FOR CONSTRUCTION APPROPRIATE LANGUAGE THAT PROHIBITS THE CONTRACTOR OR ANY SUBCONTRACTORS OR OTHERS FROM MAKING ANY CHANGES OR MODIFICATIONS TO LRL'S CONSTRUCTION DOCUMENTS WITHOUT THE PRIOR WRITTEN APPROVAL OF LRL AND THAT FURTHER REQUIRES THE CONTRACTOR TO INDEMNIFY BOTH LRL AND THE CLIENT FROM ANY LIABILITY OR COST ARISING FROM SUCH CHANGES MADE WITHOUT SUCH PROPER AUTHORIZATION.

GENERAL NOTES:

EXISTING SERVICES AND UTILITIES SHOWN ON THESE DRAWINGS ARE TAKEN FROM THE BEST AVAILABLE RECORDS, BUT MAY NOT BE COMPLETE OR TO DATE. CONTRACTOR SHALL VERIFY IN FIELD FOR LOCATION AND ELEVATION OF PIPES AND CHECK WITH THE UTILITY COMPANIES BEFORE DIGGING OR PERFORMING WORK.

CONTRACTOR IS ADVISED TO COLLECT INFORMATION ON SOIL CONDITIONS BEFORE START OF CONSTRUCTION.

THE ENGINEER WAIVES ANY AND ALL RESPONSIBILITY AND LIABILITY FOR PROBLEMS WHICH ARISE FROM FAILURE TO FOLLOW THESE PLANS, SPECIFICATIONS AND THE DESIGN INTENT THEY CONVEY, OR FOR PROBLEMS WHICH ARISE FROM OTHERS' FAILURE TO OBTAIN AND/OR FOLLOW THE ENGINEER'S GUIDANCE WITH RESPECT TO ANY ERRORS, OMISSIONS, INCONSISTENCIES AMBIGUITIES OR CONFLICTS WHICH ARE ALLEGED.

CONTRACTOR TO VERIFY ALL DIMENSIONS AND NOTIFY THE ENGINEER OF ANY DISCREPANCIES BEFORE WORK COMMENCES. DO NOT SCALE DRAWINGS.

ADDITIONAL EROSION AND SEDIMENT CONTROL MEASURES, INCLUDING STRAW BALE BARRIERS AND TEMPORARY CHECK DAMS, SHALL BE INSTALLED WHERE REQUIRED TO INTERCEPT RUNOFF, REDUCE FLOW VELOCITIES, PROMOTE SEDIMENT SETTLEMENT, AND PROTECT DOWNSTREAM DRAINAGE SYSTEMS AND RECEIVING AREAS. THE TYPE, LOCATION, AND EXTENT OF THESE MEASURES SHALL BE ADJUSTED AS NECESSARY BASED ON SITE CONDITIONS AND THE PROGRESSION OF CONSTRUCTION ACTIVITIES.

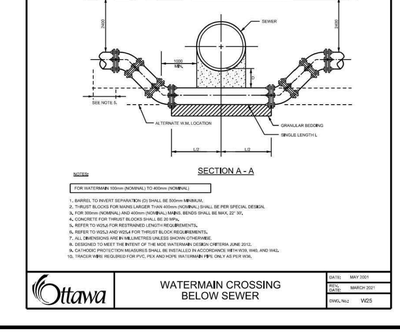

NOTES:
1. PIN TO BE SS.
2. FOR FRAME DETAIL SEE DWG No. S25.
3. ALL DIMENSIONS ARE IN MILLIMETRES UNLESS OTHERWISE SHOWN.

N.T.S.

STANDARD CIRCULAR SANITARY & COMBINED MAINTENANCE HOLE COVER	DATE: MARCH 2006 REV. DATE: MARCH 2017 DWG. No.: S24

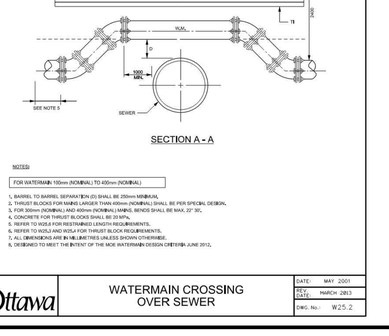

NOTES:
1. THE INSULATION MATERIAL SHALL BE EXTRUDED POLYSTYRENE ACCORDING TO MMA-93.13 WITH A MINIMUM COMPRESSIVE STRENGTH OF 275 KPa.
2. MINIMUM INSULATION THICKNESS SHALL BE 50MM.
3. JOINTS SHALL BE STAGGERED FOR MULTIPLE INSULATION SHEETS.
4. ALL DIMENSIONS ARE IN MILLIMETERS UNLESS OTHERWISE SHOWN.

INSULATION FOR SHALLOW SEWERS	DATE: MARCH 2003 REV. DATE: - DWG. No.: S35

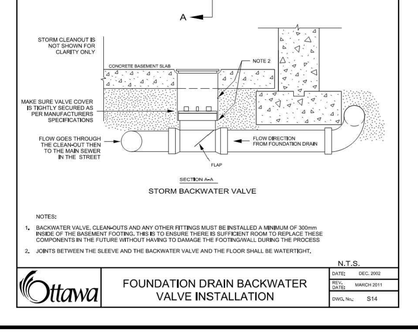

NOTES:
1 Vents shall be as specified by the manufacturer.
2 Length of plate may be increased to suit the curb depression width.
3 Material of plate shall be as specified in Contract Documents.
A Adjacent cast iron plates shall be permanently connected using a locking mechanism and any hardware shall be hot dipped galvanized.
B All dimensions are in millimetres unless otherwise shown.

ONTARIO PROVINCIAL STANDARD DRAWING	Nov 2019	Rev 1
CONCRETE SIDEWALK RAMPS TACTILE WALKING SURFACE INDICATORS COMPONENT		
	OPSD 310.039	

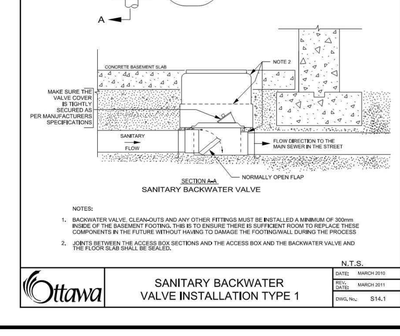

NOTES
FOR 150 – 400mm (NOMINAL DIAMETER) WATERMAINS, WHERE THE DEPTH OF COVER IS LESS THAN 2400mm

1. INCREMENTS OF THICKNESS SHALL BE ADJUSTABLE TO 25mm.
2. IN PROXIMITY OF MAINTENANCE HOLES, CULVERTS, CATCHBASINS, ETC., INSULATION SHALL BE PLACED PER DETAIL W23
3. DEPTH OF COVER LESS THAN 1200mm REQUIRES SPECIAL DESIGN
4. STAGGER JOINTS OF MULTIPLE SHEETS.
5. ALL DIMENSIONS ARE IN MILLIMETRES UNLESS SHOWN OTHERWISE.

THERMAL INSULATION FOR WATERMAINS IN SHALLOW TRENCHES	DATE: MAY 2001 REV. DATE: MARCH 2013 DWG. No.: W22

NOTE:
FOR AVAILABILITY, SERVICES AND ISOLATION VALVES.

1. ALL DIMENSIONS ARE IN MILLIMETRES UNLESS SHOWN OTHERWISE.
2. FOR 300 AND 250mm VALVES, ADD SECOND BOLT ON THE CONCRETE BLOCKS AS REQUIRED TO RADIO BELL HIGH ENOUGH TO PREVENT CONTACT WITH THE VALVE SCRAPER.

VALVE BOX ASSEMBLY	DATE: MAY 2001 REV. DATE: MARCH 2020 DWG. No.: W24

NOTES:
FOR WATERMAINS 150mm (NOMINAL) TO 400mm (NOMINAL)

1. BARREL TO INVERT SEPARATION (D) SHALL BE 350mm MINIMUM.
2. THRUST BLOCKS FOR MAINS LARGER THAN 400mm (NOMINAL) SHALL BE PER SPECIAL DESIGN.
3. FOR 300mm (NOMINAL) AND 400mm (NOMINAL) MAINS, BENDS SHALL BE MAX. 22.5°.
4. CONCRETE FOR THRUST BLOCKS SHALL BE 20 MPa.
5. REFER TO W28.8 FOR RESTRAINED LENGTH REQUIREMENTS.
6. REFER TO W28.0 AND W28.4 FOR THRUST BLOCK REQUIREMENTS.
7. ALL DIMENSIONS ARE IN MILLIMETRES UNLESS SHOWN OTHERWISE.
8. DESIGNED TO MEET THE INTENT OF THE MOE WATERMAIN DESIGN CRITERIA JUNE 2012.
9. CATHODIC PROTECTION MEASURES SHALL BE INSTALLED IN ACCORDANCE WITH W28, W40, AND W42.
10. TRACER WIRE REQUIRED FOR PVC, PEX AND HDPE WATERMAIN PIPE ONLY AS PER W36.

WATERMAIN CROSSING BELOW SEWER	DATE: MAY 2001 REV. DATE: MARCH 2021 DWG. No.: W25

NOTES:
FOR WATERMAIN 150mm (NOMINAL) TO 400mm (NOMINAL)

1. BARREL TO BARREL SEPARATION (D) SHALL BE 250mm MINIMUM.
2. THRUST BLOCKS FOR MAINS LARGER THAN 400mm (NOMINAL) SHALL BE PER SPECIAL DESIGN.
3. FOR 300mm (NOMINAL) AND 400mm (NOMINAL) MAINS, BENDS SHALL BE MAX. 22° 30'.
4. CONCRETE FOR THRUST BLOCKS SHALL BE 20 MPa.
5. REFER TO W28.8 FOR RESTRAINED LENGTH REQUIREMENTS.
6. REFER TO W28.0 AND W28.4 FOR THRUST BLOCK REQUIREMENTS.
7. ALL DIMENSIONS ARE IN MILLIMETRES UNLESS SHOWN OTHERWISE.
8. DESIGNED TO MEET THE INTENT OF THE MOE WATERMAIN DESIGN CRITERIA JUNE 2012.

WATERMAIN CROSSING OVER SEWER	DATE: MAY 2001 REV. DATE: DWG. No.: W25.2

NOTES:
1. BACKWATER VALVE, CLEAN-OUTS AND ANY OTHER FITTINGS MUST BE INSTALLED A MINIMUM OF 300mm INSIDE OF THE BASEMENT FOOTING. THIS IS TO ENSURE THERE IS SUFFICIENT ROOM TO REPLACE THESE COMPONENTS IN THE FUTURE WITHOUT HAVING TO DAMAGE THE FOOTING/WALL DURING THE PROCESS
2. JOINTS BETWEEN THE SLEEVE AND THE BACKWATER VALVE AND THE FLOOR SHALL BE WATERTIGHT.

N.T.S.

FOUNDATION DRAIN BACKWATER VALVE INSTALLATION	DATE: DEC. 2002 REV. DATE: MARCH 2011 DWG. No.: S14

NOTES:
1. BACKWATER VALVE, CLEAN-OUTS AND ANY OTHER FITTINGS MUST BE INSTALLED A MINIMUM OF 300mm INSIDE OF THE BASEMENT FOOTING. THIS IS TO ENSURE THERE IS SUFFICIENT ROOM TO REPLACE THESE COMPONENTS IN THE FUTURE WITHOUT HAVING TO DAMAGE THE FOOTING/WALL DURING THE PROCESS
2. JOINTS BETWEEN THE ACCESS BOX SECTIONS AND THE ACCESS BOX AND THE BACKWATER VALVE AND THE FLOOR SLAB SHALL BE SEALED.

N.T.S.

SANITARY BACKWATER VALVE INSTALLATION TYPE 1	DATE: MARCH 2010 REV. DATE: MARCH 2011 DWG. No.: S14.1

No.	REVISIONS	BY	DATE
03	ISSUED FOR APPROVAL	S.V.	14 OCT. 2026
02	RE-ISSUED FOR APPROVAL	S.V.	13 FEB. 2026
01	ISSUED FOR SPC APPROVAL	S.V.	12 NOV. 2025

LICENSED PROFESSIONAL ENGINEER
V. JOHNSON
100510576
10-14-2026
PROVINCE OF ONTARIO

NOT AUTHENTIC UNLESS SIGNED AND DATED

LRL
ENGINEERING | INGÉNIERIE
5430 Canotek Road | Ottawa, ON, K1J 9G2
www.lrl.ca | (613) 842-3434

CLIENT
THEIA PARTNERS

DESIGNED BY:	DRAWN BY:	APPROVED BY:
S.V.	S.V.	V.J.

PROJECT
30 CLEARY AVENUE ODAYANHAWAY DEVELOPMENT
30 CLEARY AVENUE, OTTAWA, ON

FILE NO.	PLAN NO.
D07-12-25-0149	19403

DRAWING TITLE
CONSTRUCTION DETAIL PLAN

PROJECT NO.
2631617

DATE
OCTOBER 2026

C901

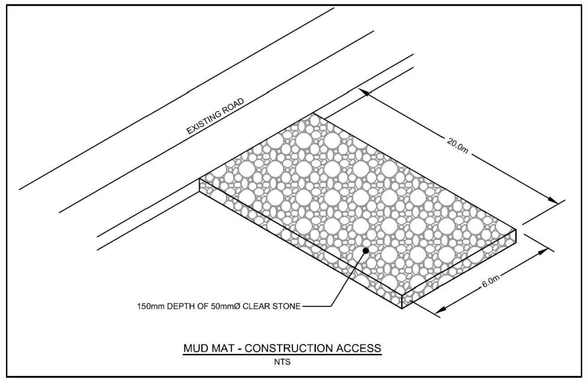

MUD MAT - CONSTRUCTION ACCESS
NTS

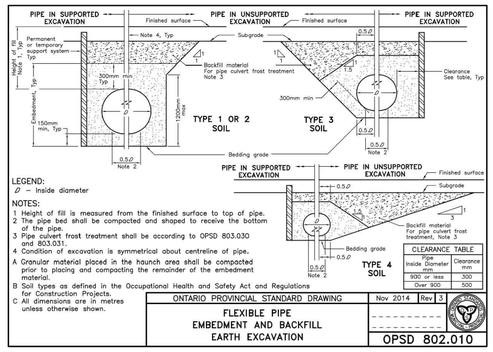

ONTARIO PROVINCIAL STANDARD DRAWING	Nov 2014	Rev 3
FLEXIBLE PIPE EMBEDMENT AND BACKFILL EARTH EXCAVATION		
OPSD 802.010		

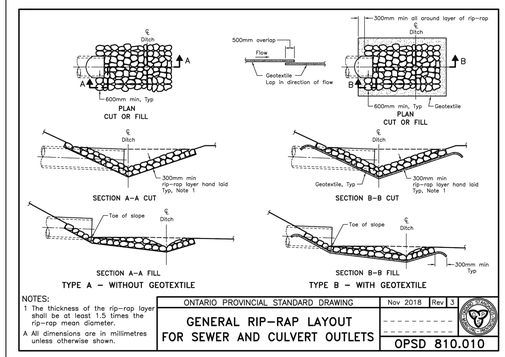

NOTES:
1 The thickness of the rip-rap layer shall be at least 1.5 times the rip-rap mean diameter.
A All dimensions are in millimetres unless otherwise shown.

ONTARIO PROVINCIAL STANDARD DRAWING	Nov 2018	Rev 3
GENERAL RIP–RAP LAYOUT FOR SEWER AND CULVERT OUTLETS		
OPSD 810.010		

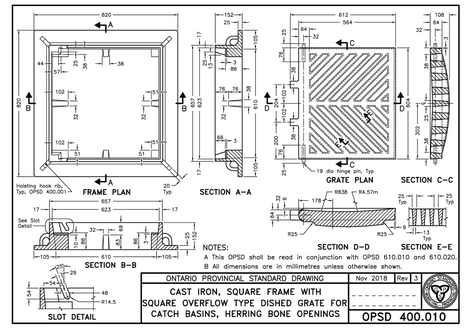

NOTES:
A This OPSD shall be read in conjunction with OPSD 610.010 and 610.020.
B All dimensions are in millimetres unless otherwise shown.

SLOT DETAIL

ONTARIO PROVINCIAL STANDARD DRAWING	Nov 2018	Rev 3
CAST IRON, SQUARE FRAME WITH SQUARE OVERFLOW TYPE DISHED GRATE FOR CATCH BASINS, HERRING BONE OPENINGS		
OPSD 400.010		

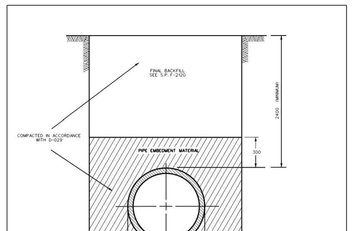

NOTES:
1. PIPE EMBEDMENT MATERIAL – GRANULAR 'A'.
2. FINAL BACKFILL – APPROVED NATIVE MATERIAL OR SELECT SUBGRADE IN ACCORDANCE WITH F-2120
3. ALL DIMENSIONS ARE IN MILLIMETRES UNLESS SHOWN OTHERWISE.
4.

TYPE OUTSIDE DIA.	CLEARANCE
900 or LESS	450
OVER 900	500

5. WHEN APPROVED BY THE CONTRACT ADMINISTRATOR, POOR SOILS SHALL BE EXCAVATED TO CREATE A FOUNDATION THAT SHALL BE FILLED TO THE BEDDING WITH GRANULAR 'B'.

Ottawa | STANDARD TRENCH DETAIL | DATE: MAY 2001 | REV. DATE: MARCH 2016 | DWG. No.: W17

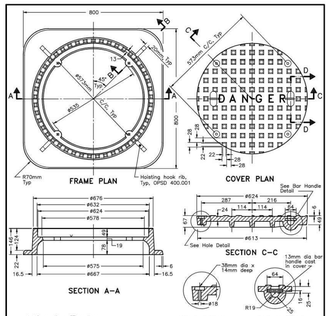

NOTE:
A All dimensions are in millimetres unless otherwise shown.

ONTARIO PROVINCIAL STANDARD DRAWING	Nov 2018	Rev 4
CAST IRON, SQUARE FRAME WITH CIRCULAR WATERTIGHT COVER FOR MAINTENANCE HOLES		
OPSD 401.030		

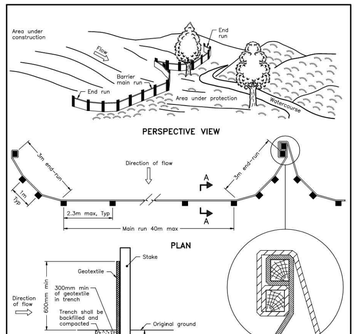

NOTE:
A All dimensions are in millimetres unless otherwise shown.

ONTARIO PROVINCIAL STANDARD DRAWING	Nov 2021	Rev 3
LIGHT–DUTY SILT FENCE BARRIER		
OPSD 219.110		

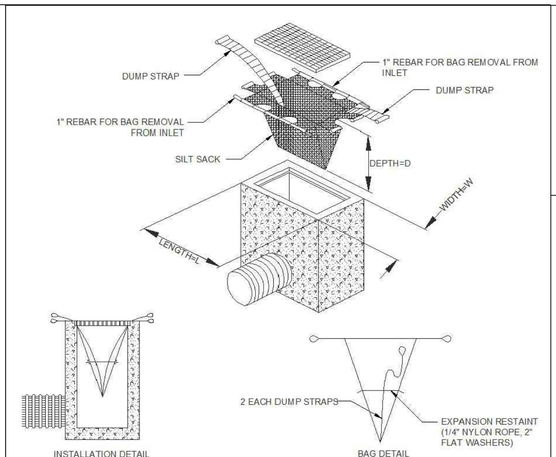

INLET SEDIMENT CONTROL DEVICE
N.T.S.

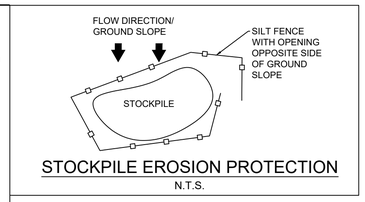

STOCKPILE EROSION PROTECTION
N.T.S.

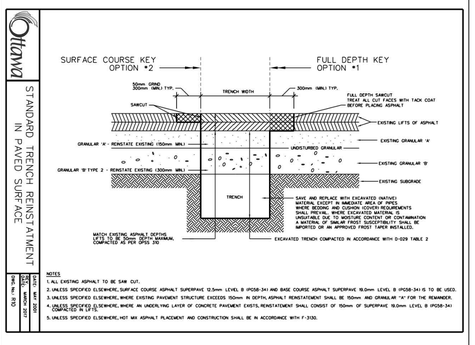

NOTES
1. ALL EXISTING ASPHALT TO BE SAW CUT.
2. UNLESS SPECIFIED ELSEWHERE, SURFACE COURSE ASPHALT SUPERPAVE 12.5mm LEVEL B (PG58-34) AND BASE COURSE ASPHALT SUPERPAVE 19.0mm LEVEL B (PG58-34) IS TO BE USED.
3. UNLESS SPECIFIED ELSEWHERE, WHERE EXISTING PAVEMENT STRUCTURE EXCEEDS 150mm IN DEPTH, ASPHALT REINSTATEMENT SHALL BE 150mm AND GRANULAR "A" FOR THE REMAINDER.
4. UNLESS SPECIFIED ELSEWHERE, WHERE AN UNDERLYING LAYER OF CONCRETE PAVEMENT EXISTS, REINSTATEMENT SHALL CONSIST OF 150mm OF SUPERPAVE 19.0mm LEVEL B (PG58-34) COMPACTED IN LIFTS.
5. UNLESS SPECIFIED ELSEWHERE, HOT MIX ASPHALT PLACEMENT AND CONSTRUCTION SHALL BE IN ACCORDANCE WITH F-2130.

DATE: MAY 2001 | REV. DATE: MARCH 2017 | DWG. No.: R10

USE AND INTERPRETATION OF DRAWINGS

GENERAL CONDITIONS OF THE CONTRACT FOR CONSTRUCTION ARE PART OF THE CONTRACT DOCUMENTS AND DESCRIBE USE AND INTENT OF THE DRAWING. THE CONTRACT DOCUMENTS INCLUDE NOT ONLY THE DRAWINGS, BUT ALSO THE OWNER-CONTRACTOR AGREEMENTS, CONDITIONS OF THE CONTRACT, THE SPECIFICATIONS, ADDENDA, AND MODIFICATIONS ISSUED AFTER EXECUTION OF THE CONTRACT. THESE CONTRACT DOCUMENTS ARE COMPLEMENTARY, AND WHAT IS REQUIRED BY ANY ONE SHALL BE BINDING AS IF REQUIRED BY ALL. WORK NOT COMPLETELY DELINEATED HEREON SHALL BE CONSTRUCTED OF THE SAME MATERIALS AND DETAILED SIMILARLY AS WORK SHOWN MORE COMPLETELY ELSEWHERE IN THE CONTRACT DOCUMENTS.

BY USE OF THE DRAWINGS FOR CONSTRUCTION OF THE PROJECT, THE OWNER CONFIRMS THAT HE HAS REVIEWED AND APPROVED THE DRAWINGS. THE CONTRACTOR CONFIRMS THAT HE HAS VISITED THE SITE, FAMILIARIZED HIMSELF WITH THE LOCAL CONDITIONS, VERIFIED FIELD DIMENSIONS AND CORRELATED HIS OBSERVATIONS WITH THE REQUIREMENTS OF THE CONTRACT DOCUMENTS.

AS INSTRUMENTS OF SERVICE, ALL DRAWINGS, SPECIFICATIONS, CAD FILES OR OTHER ELECTRONIC MEDIA AND COPIED THERE OF FURNISHED BY THE ENGINEER ARE HIS PROPERTY. THEY ARE TO BE USED ONLY FOR THIS PROJECT AND ARE NOT TO BE USED ON ANY OTHER PROJECT, INCLUDING REPEATS OF THE PROJECT. CHANGES TO THE DRAWINGS MAY ONLY BE MADE BY THE ENGINEER.

UNLESS THE REVISION TITLE IS "ISSUED FOR CONSTRUCTION", THESE DRAWINGS SHALL BE CONSIDERED PRELIMINARY AND SHALL NOT BE USED AS A CONSTRUCTION DOCUMENT.

THESE DRAWINGS ILLUSTRATES THE WORK TO BE DONE. THE ENGINEER IS NOT RESPONSIBLE FOR THE MEANS, METHODS, TECHNIQUES, SEQUENCES, AND PROCEDURES USED TO DO THE WORK, OR THE SAFETY ASPECTS OF CONSTRUCTION, AND NOTHING ON THESE DRAWINGS EXPRESSED OR IMPLIED CHANGES THIS CONDITION. CONTRACTOR SHALL DETERMINE ALL CONDITIONS AT THE SITE AND SHALL BE RESPONSIBLE FOR KNOWING HOW THEY AFFECT THE WORK. SUBMITTAL OF A BID TO PERFORM THIS WORK IS ACKNOWLEDGEMENT OF THE RESPONSIBILITIES, AND THAT THEY HAVE BEEN FULLY CONSIDERED IN PLANNING OF THE WORK, AND THE BID PRICE. NO CLAIMS FOR EXTRA CHANGES DUE TO THESE CONDITIONS WILL BE FORTHCOMING.

UNAUTHORIZED CHANGES:

IN THE EVENT THE CLIENT, THE CLIENT'S CONTRACTORS OR SUBCONTRACTORS, OR ANYONE FOR WHOM THE CLIENT IS LEGALLY LIABLE MAKES OR PERMITS TO BE MADE ANY CHANGES TO ANY REPORTS, PLANS, SPECIFICATIONS OR OTHER CONSTRUCTION DOCUMENTS PREPARED BY LRL ASSOCIATES LTD. (LRL) WITHOUT OBTAINING LRL'S PRIOR WRITTEN CONSENT, THE CLIENT SHALL ASSUME FULL RESPONSIBILITY FOR THE RESULTS OF SUCH CHANGES. THEREFORE THE CLIENT AGREES TO WAIVE ANY CLAIM AGAINST LRL AND TO RELEASE LRL FROM ANY LIABILITY ARISING DIRECTLY OR INDIRECTLY FROM SUCH UNAUTHORIZED CHANGES.

IN ADDITION, THE CLIENT AGREES, TO THE FULLEST EXTENT PERMITTED BY LAW, TO INDEMNIFY AND HOLD HARMLESS LRL FROM ANY DAMAGES, LIABILITIES OR COST, INCLUDING REASONABLE ATTORNEY'S FEES AND COST OF DEFENSE, ARISING FROM SUCH CHANGES.

IN ADDITION, THE CLIENT AGREES TO INCLUDE IN ANY CONTRACTS FOR CONSTRUCTION APPROPRIATE LANGUAGE THAT PROHIBITS THE CONTRACTOR OR ANY SUBCONTRACTORS OF ANY TIER FROM MAKING ANY CHANGES OR MODIFICATIONS TO LRL'S CONSTRUCTION DOCUMENTS WITHOUT THE PRIOR WRITTEN APPROVAL OF LRL AND THAT FURTHER REQUIRES THE CONTRACTOR TO INDEMNIFY BOTH LRL AND THE CLIENT FROM ANY LIABILITY OR COST ARISING FROM SUCH CHANGES MADE WITHOUT SUCH PROPER AUTHORIZATION.

GENERAL NOTES:

EXISTING SERVICES AND UTILITIES SHOWN ON THESE DRAWINGS ARE TAKEN FROM THE BEST AVAILABLE RECORDS, BUT MAY NOT BE COMPLETE OR TO DATE. CONTRACTOR SHALL VERIFY IN FIELD FOR LOCATION AND ELEVATION OF PIPES AND CHECK WITH THE UTILITY COMPANIES BEFORE DIGGING OR PERFORMING WORK.

CONTRACTOR IS ADVISED TO COLLECT INFORMATION ON SOIL CONDITIONS BEFORE START OF CONSTRUCTION.

THE ENGINEER WAIVES ANY AND ALL RESPONSIBILITY AND LIABILITY FOR PROBLEMS WHICH ARISE FROM FAILURE TO FOLLOW THESE PLANS, SPECIFICATIONS AND THE DESIGN INTENT THEY CONVEY, OR FOR PROBLEMS WHICH ARISE FROM OTHERS' FAILURE TO OBTAIN AND/OR FOLLOW THE ENGINEER'S GUIDANCE WITH RESPECT TO ANY ERRORS, OMISSIONS, INCONSISTENCIES AMBIGUITIES OR CONFLICTS WHICH ARE ALLEGED.

CONTRACTOR TO VERIFY ALL DIMENSIONS AND NOTIFY THE ENGINEER OF ANY DISCREPANCIES BEFORE WORK COMMENCES. DO NOT SCALE DRAWINGS.

ADDITIONAL EROSION AND SEDIMENT CONTROL MEASURES, INCLUDING STRAW BALE BARRIERS AND TEMPORARY CHECK DAMS, SHALL BE INSTALLED WHERE REQUIRED TO INTERCEPT RUNOFF, REDUCE FLOW VELOCITIES, PROMOTE SEDIMENT SETTLEMENT, AND PROTECT DOWNSTREAM DRAINAGE SYSTEMS AND RECEIVING AREAS. THE TYPE, LOCATION, AND EXTENT OF THESE MEASURES SHALL BE ADJUSTED AS NECESSARY BASED ON SITE CONDITIONS AND THE PROGRESSION OF CONSTRUCTION ACTIVITIES.

No.	REVISIONS	BY	DATE
03	ISSUED FOR APPROVAL	S.V.	14 OCT. 2026
02	RE-ISSUED FOR APPROVAL	S.V.	13 FEB. 2026
01	ISSUED FOR SPC APPROVAL	S.V.	12 NOV. 2025

LICENSED PROFESSIONAL ENGINEER
V. JOHNSON
100510576
10-14-2026
PROVINCE OF ONTARIO

NOT AUTHENTIC UNLESS SIGNED AND DATED

LRL
ENGINEERING | INGÉNIERIE
5430 Canotek Road | Ottawa, ON, K1J 9G2
www.lrl.ca | (613) 842-3434

CLIENT
THEIA PARTNERS

DESIGNED BY:	DRAWN BY:	APPROVED BY:
S.V.	S.V.	V.J.

PROJECT
30 CLEARY AVENUE ODAYANHAWAY DEVELOPMENT
30 CLEARY AVENUE, OTTAWA, ON

FILE NO. D07-12-25-0149
PLAN NO. 19403

DRAWING TITLE
CONSTRUCTION DETAIL PLAN

PROJECT NO. 2631617
DATE OCTOBER 2026

C902

APPENDIX H

NCC Correspondence/ Consultation

City of Ottawa Correspondence/ Consultation

Sarthak Vora

From: Horton, Ted <Ted.Horton@ncc-ccn.ca>
Sent: Tuesday, April 29, 2025 12:45 PM
To: Virginia Johnson
Cc: Sarthak Vora; Crookes, Adam
Subject: RE: NCC SWM Pre Con Comments- 30 Cleary Avenue, Ottawa

Categories: Blue Category

Hi Virginia,

Thanks for your follow-up and site-visit photos

In line with our previous correspondence, the volume control requirements are:

1. Comply with the Pinecrest Creek/Westboro SWM Guidelines – including retention of the first 10mm of rainfall on-site.
2. Comply with Section 4.3.2 of the NCC SWM Manual, including ensuring that pre-development runoff volumes for the 90th percentile event are not exceeded (if the pre-development imperviousness of the disturbed area is 60% or higher, the Pinecrest/Westboro Guidelines will likely govern).

We met with the City and are expecting some additional information from them regarding the upstream drainage from 851 Richmond and any past approvals for development on the site (e.g. the day care). We ask that you provide (1) all available details on all existing drainage to the existing outfall in your SWM Report, and (2) an evaluation and opinion of whether the downstream path of flow requires any modification or improvement to receive the runoff without adverse impact. We will need to ensure that the existing outfall and downstream infrastructure is sufficient.

I hope the above assists in providing some clarity – we are also available from 3:00 to 3:30 tomorrow afternoon if a brief conversation would be beneficial.

All the best,
Ted

From: Virginia Johnson <vjohnson@lrl.ca>
Sent: April 15, 2025 3:39 PM
To: Horton, Ted <Ted.Horton@ncc-ccn.ca>
Cc: Sarthak Vora <svora@lrl.ca>; Crookes, Adam <adam.crookes@ncc-ccn.ca>
Subject: RE: NCC SWM Pre Con Comments- 30 Cleary Avenue, Ottawa

Hello Ted and Adam,
Following up on the correspondence below. Additionally, we have also done a recent site visit to investigate the downstream conditions for the outlet of the swale. There is a current 800mm CSP culvert which at peak of the spring runoff appears to have a very low flow. I have attached a photo and a quick markup showing this path in it's current conditions.



Thanks,

Virginia Johnson, P.Eng
Civil Engineering Manager/Associate

LRL ENGINEERING | INGÉNIERIE
Head Office – 5430 Canotek Rd., Ottawa, ON
C +1 613-915-9503 **E** vjohnson@lrl.ca
Ottawa | *Pembroke* | *Moncton*
www.lrl.ca

From: Virginia Johnson
Sent: April 8, 2025 10:45 AM
To: Horton, Ted <Ted.Horton@ncc-ccn.ca>
Cc: Sarthak Vora <svora@lrl.ca>; Crookes, Adam <adam.crookes@ncc-ccn.ca>
Subject: RE: NCC SWM Pre Con Comments- 30 Cleary Avenue, Ottawa

Thanks again for the continued dialogue on the 30 Cleary file -it's a file we are making progress on now, and are working through the fine details of the site plan with the development ream.

Just wanted to revisit a point that may help us move forward—on a previous project, also under NCC review, we were able to proceed with targeting infiltration of the first 10 mm of rainfall. That approach was accepted and, in our view, could be more achievable on this site as well, especially given some of the limitations we're working with.
The bigger challenge here is that the proposed building footprint and the underground parking structure really constrain the available space for traditional LID measures and meaningful infiltration. It leaves very little room for implementing volume reduction in a typical way.

One of the key pieces of rationale we're relying on is that the adjacent parcel—still within the broader 30 Cleary property, but outside the limit of development—already offers substantial retention capacity. These areas include low-lying greenspace and existing garden beds, all of which are to remain undisturbed. In short, they continue to function as natural storage zones.
This development is also intentionally limited to the existing asphalt area on the west side of the site. We're really trying to keep the scope isolated and avoid impacting the rest of the parcel. Applying the current volume reduction criteria solely to that redeveloped asphalt area makes things extremely tight—borderline unattainable—without extending the stormwater strategy beyond the construction limits.

Given all that, we'd like to confirm whether targeting the 10 mm infiltration volume could be accepted as a practical alternative for this site as well. We're hoping this can strike the right balance between meeting stormwater objectives and acknowledging the site's real constraints.

Let me know your thoughts, or if you'd like to hop on a quick call to talk it through further.

Thanks,
Virginia Johnson, P.Eng
Civil Engineering Manager/Associate

LRL ENGINEERING | INGÉNIERIE
Head Office – 5430 Canotek Rd., Ottawa, ON
C +1 613-915-9503 **E** vjohnson@lrl.ca
Ottawa | *Pembroke* | *Moncton*
www.lrl.ca

From: Horton, Ted <Ted.Horton@ncc-ccn.ca>
Sent: March 31, 2025 3:27 PM
To: Virginia Johnson <vjohnson@lrl.ca>
Cc: Sarthak Vora <svora@lrl.ca>; Crookes, Adam <adam.crookes@ncc-ccn.ca>
Subject: RE: NCC SWM Pre Con Comments- 30 Cleary Avenue, Ottawa

Hi Virginia,

Thanks for sharing the historical insights, and for the follow-up.

I've reviewed what I can find in our files and have not located any past approval to acknowledge accepting SWM from the 30 Cleary site. However, as you've noted there is quite a history to it that appears to have existed without significant issue.

Our proposed approach is below.

- Attached please find attached the NCC's Stormwater Management Manual.
- We ask that you complete Appendix D of the Manual (or provide a document that lays out the requested information in the same order).
- You'll also find here the *Stormwater Management Guidelines for the Pinecrest Creek/Westboro Area* with which you are likely familiar; we ask that you ensure your design adheres to the more stringent of the Manual and the local Guidelines.
- Please provide us with your SWM report that you will submit as part of your upcoming site plan approval application to the City.
- Please request the City include us in the circulation of the site plan approval application, along with their review comments.
- Upon demonstration that your SWM complies with the criteria in the Manual and is also acceptable to the City, we anticipate providing comment to the City that we do not object to the design and continuing to receive the runoff.

Please let me know if you've any questions or if we can be of assistance.

Best,
Ted

From: Virginia Johnson <vjohnson@lrl.ca>
Sent: March 30, 2025 7:31 AM
To: Horton, Ted <Ted.Horton@ncc-ccn.ca>; Crookes, Adam <adam.crookes@ncc-ccn.ca>
Cc: Sarthak Vora <svora@lrl.ca>
Subject: RE: NCC SWM Pre Con Comments- 30 Cleary Avenue, Ottawa

Hello Ted and Adam,
The path forward on the outlet for the runoff generated from this site is becoming very critical to move this file forward.

Can you provide an update on your end on the internal review?

Thanks,

Virginia Johnson, P.Eng
Civil Engineering Manager/Associate

LRL ENGINEERING | INGÉNIERIE
Head Office – 5430 Canotek Rd., Ottawa, ON
C +1 613-915-9503 **E** vjohnson@lrl.ca
Ottawa | *Pembroke* | *Moncton*
www.lrl.ca

From: Virginia Johnson
Sent: March 25, 2025 10:44 AM
To: Horton, Ted <Ted.Horton@ncc-ccn.ca>; Crookes, Adam <adam.crookes@ncc-ccn.ca>
Cc: Sarthak Vora <svora@lrl.ca>
Subject: RE: NCC SWM Pre Con Comments- 30 Cleary Avenue, Ottawa

Hello Ted and Adam,
Following our meeting last week, we have had some additional correspondence with the property owners who provided quite a detailed history of the site and the drainage conditions for 30 Cleary Avenue. I wanted to

providing insight to the long-standing stormwater flow patterns and their relationship with NCC lands as shared with me. The Unitarian Campus has relied on natural drainage patterns since its establishment in 1967, with stormwater historically flowing towards NCC lands and ultimately into the Ottawa River.

Key historical drainage insights:

- Prior to and following the construction of the church in 1967, the site was not serviced by the City's storm drainage system. Instead, stormwater either infiltrated into the ground or conveyed overland to a watercourse located on the eastern portion of the property. This watercourse/ditch still passes through NCC lands, crosses under the Parkway via a culvert, and discharges into the Ottawa River.
- From the beginning, stormwater from the western part of the church property, as well as portions of the Richmond Road and Aylen Street areas, naturally drained overland onto NCC lands towards the watercourse. The gardens area within the church campus also channels runoff into this natural drainage system via a culvert.
- In 1982, the construction of Unitarian House (UH) introduced new paved surfaces and an internal City storm drain servicing the UH courtyard and access roads, discharging to Richmond Road via Cleary Avenue. However, the surrounding areas, including the western and central portions of the campus, maintained their historic drainage routes onto NCC lands.
- Swales along the western campus boundary continue to convey stormwater northward onto NCC lands, directing flow towards the watercourse, which remains the primary drainage outlet.
- Subsequent property adjustments, such as the 1998 purchase of the CPR Strip and the 2006 construction of the River Parkway Children's Centre (RPCC), did not alter these fundamental historic drainage patterns. The RPCC's stormwater partially enters the City system, but significant portions of runoff still drain northward via natural channels into the watercourse/ditch through NCC lands.

Given these longstanding conditions, the existing stormwater flows onto NCC lands should be considered an established and ongoing drainage condition. The campus has consistently directed runoff northward, and this drainage has functioned effectively within the broader hydrologic system leading to the Ottawa River. As discussed on our call, we are prepared to treat for quality 9improving existing conditions) for the flow that we can capture, and ensure post development release rates to not exceed pre development rates.

I trust this summary provides clarity on the historical and continued drainage patterns at 30 Cleary Avenue. Please let me know if additional details are required to allow this design and re-development to proceed.

Thanks,
Virginia Johnson, P.Eng
Civil Engineering Manager/Associate

LRL ENGINEERING | INGÉNIERIE
Head Office – 5430 Canotek Rd., Ottawa, ON
C +1 613-915-9503 **E** vjohnson@lrl.ca
Ottawa | *Pembroke* | *Moncton*
www.lrl.ca

From: Sarthak Vora <svora@lrl.ca>
Sent: March 19, 2025 2:19 PM
To: Horton, Ted <Ted.Horton@ncc-ccn.ca>; Crookes, Adam <adam.crookes@ncc-ccn.ca>
Cc: Brennan, Colin <Colin.Brennan@ncc-ccn.ca>; Virginia Johnson <vjohnson@lrl.ca>
Subject: RE: NCC SWM Pre Con Comments- 30 Cleary Avenue, Ottawa

Hello Ted and Adam,

Thanks for the meeting today! I'm sending over the predevelopment watershed plan for your reference. The attachment includes the catchment area marked on the topo survey, along with a plan showing the proposed

building envelope in the background. The catchments marked in red flow toward NCC lands, while the city's sewer network captures the ones in cyan, and we're planning to mimic this existing drainage pattern in the post-development conditions as well. Hopefully, this clearly illustrates the portion of site runoff directed toward NCC lands.

Please let me know if you need any additional information or clarification. Also, we'd really appreciate it if you could share the NCC Stormwater Management Manual with us.

Regards,

Sarthak Vora, Civil E.I.T

LRL ENGINEERING | INGÉNIERIE
Head Office – 5430 Canotek Rd., Ottawa, ON
T +1 613-842-3434 **C** +1 613-915-7633 **E** svora@lrl.ca
Ottawa | Pembroke | Moncton
www.lrl.ca

From: Horton, Ted <Ted.Horton@ncc-ccn.ca>
Sent: Tuesday, March 18, 2025 12:48 PM
To: Sarthak Vora <svora@lrl.ca>; Virginia Johnson <vjohnson@lrl.ca>
Cc: Brennan, Colin <Colin.Brennan@ncc-ccn.ca>; Crookes, Adam <adam.crookes@ncc-ccn.ca>
Subject: RE: NCC SWM Pre Con Comments- 30 Cleary Avenue, Ottawa

Hi Sarthak,

Thanks for the invitation. My colleague Adam (in CC) will be our engineering point of contact on this file – he has other commitments this afternoon so I will decline the 2:30 invitation.

I can suggest the following alternate times:

- Tomorrow between 11 and 12, or 1 and 2
- Monday the 24th between 10 and 12

Best,
Ted

-----Original Appointment-----
From: Sarthak Vora <svora@lrl.ca>
Sent: March 18, 2025 9:23 AM
To: Sarthak Vora; Horton, Ted; Virginia Johnson; Brennan, Colin; Crookes, Adam
Subject: NCC SWM Pre Con Comments- 30 Cleary Avenue, Ottawa
When: March 18, 2025 2:30 PM-3:00 PM (UTC-05:00) Eastern Time (US & Canada).
Where: Microsoft Teams Meeting

Microsoft Teams Need help?

Join the meeting now

Meeting ID: 237 940 003 900

Passcode: oZ2vi2BY

For organizers: Meeting options

From: Horton, Ted <Ted.Horton@ncc-ccn.ca>
Sent: Tuesday, March 18, 2025 8:58 AM
To: Virginia Johnson <vjohnson@lrl.ca>
Cc: Sarthak Vora <svora@lrl.ca>; Brennan, Colin <Colin.Brennan@ncc-ccn.ca>; Crookes, Adam <adam.crookes@ncc-ccn.ca>
Subject: RE: [EXT] NCC SWM Pre Con Comments- 30 Cleary Avenue, Ottawa

Hi Virginia,

I'm available from 2:30 to 3:00 today. If that time doesn't work for Colin I can suggest other dates later this week.

Best,
Ted

From: Virginia Johnson <vjohnson@lrl.ca>
Sent: March 18, 2025 8:35 AM
To: Horton, Ted <Ted.Horton@ncc-ccn.ca>
Cc: Sarthak Vora <svora@lrl.ca>; Brennan, Colin <Colin.Brennan@ncc-ccn.ca>; Crookes, Adam <adam.crookes@ncc-ccn.ca>
Subject: RE: [EXT] NCC SWM Pre Con Comments- 30 Cleary Avenue, Ottawa

Hello Ted and Colin,
Thanks for the response. Do you by chance have availability today at 1:00 for a quick call to clarify, alternatively I have the following times today:

1) 2:30-3:00
2) 4:00-5:00.

Please let me know.

Thanks,

Virginia Johnson, P.Eng
Civil Engineering Manager/Associate

Please Note: I'll be out of the office on Friday, March 14th.

LRL ENGINEERING | INGÉNIERIE
Head Office – 5430 Canotek Rd., Ottawa, ON
C +1 613-915-9503 **E** vjohnson@lrl.ca
Ottawa | Pembroke | Moncton

From: Horton, Ted <Ted.Horton@ncc-ccn.ca>
Sent: March 14, 2025 10:19 AM
To: Virginia Johnson <vjohnson@lrl.ca>
Cc: Sarthak Vora <svora@lrl.ca>; Brennan, Colin <Colin.Brennan@ncc-ccn.ca>; Crookes, Adam <adam.crookes@ncc-ccn.ca>
Subject: RE: [EXT] NCC SWM Pre Con Comments- 30 Cleary Avenue, Ottawa

Hello Virginia,

Thanks for reaching out. You've accurately summarized our comment, that the existing grading of the property does not create a right to drain to a third party's (NCC) property.

I'd be happy to discuss the file, if you'd like to suggest a few dates and times that work for your team.

Best regards,
Ted

From: Virginia Johnson <vjohnson@lrl.ca>
Sent: March 11, 2025 9:00 AM
To: Horton, Ted <Ted.Horton@ncc-ccn.ca>
Cc: Sarthak Vora <svora@lrl.ca>
Subject: [EXT] NCC SWM Pre Con Comments- 30 Cleary Avenue, Ottawa

--- CAUTION | ATTENTION ---
This email originated outside of the NCC. Do not click on any links or open any attachments unless you recognize the sender and know the content is safe.
Ce courriel provient de l'extérieur de la CCN. Ne cliquez sur aucun lien et n'ouvrez aucune pièce jointe à moins que vous reconnaissiez la provenance et que vous sachiez que le contenu est sécuritaire .

Hello Ted,
We are working on a file located at 30 Cleary Avenue, you had provided some historic comments on .

I have attached the comment response that was provided to our team. Specifically, I wanted to review comment 8 under the stormwater management section. A large portion of this site is directed to NCC lands in the current condition. Given this is the existing drainage pattern, I'm wanting confirmation on the quantity and quality control measured that will be required by the NCC to ensure post development flows to not exceed predevelopment flows. The comment indicates you would want the design to alter the predevelopment drainage pattern all together.

Are you available to review and discuss this file with me given we are jumping into the detailed design.

Thanks,

Virginia Johnson, P.Eng
Civil Engineering Manager/Associate

LRL ENGINEERING | INGÉNIERIE

Head Office – 5430 Canotek Rd., Ottawa, ON
C +1 613-915-9503 **E** vjohnson@lrl.ca
Ottawa | Pembroke | Moncton
www.lrl.ca

Sarthak Vora

From: Dieme, Abi <Abibatou.Dieme@ottawa.ca>
Sent: Tuesday, May 13, 2025 5:04 PM
To: Virginia Johnson; Sarthak Vora
Cc: Gorni, Colette; Roy, Jean-Miguel; rodneyw@theiapartners.com; Shen, Stream
Subject: RE: 30 Cleary - Update SWM criteria

Correct. The small area we discussed, where only surface improvements are proposed, doesn't have to be included.

Regards,
Abi

Classified as City of Ottawa - Internal / Ville d'Ottawa - classé interne

From: Virginia Johnson <vjohnson@lrl.ca>
Sent: Tuesday, May 13, 2025 4:39 PM
To: Dieme, Abi <Abibatou.Dieme@ottawa.ca>; Sarthak Vora <svora@lrl.ca>
Cc: Gorni, Colette <colette.gorni@ottawa.ca>; Roy, Jean-Miguel <Jean-Miguel.Roy@ottawa.ca>; rodneyw@theiapartners.com; Shen, Stream <Stream.Shen@ottawa.ca>
Subject: RE: 30 Cleary - Update SWM criteria

CAUTION: This email originated from an External Sender. Please do not click links or open attachments unless you recognize the source.

ATTENTION : Ce courriel provient d'un expéditeur externe. Ne cliquez sur aucun lien et n'ouvrez pas de pièce jointe, excepté si vous connaissez l'expéditeur.

Hello Abi,
We will review.
To confirm, this will not apply to the small section of land that will continue to drain towards Cleary Avenue given we are treating this section as simply some surface improvements.

Thank you,
Virginia Johnson, P.Eng
Civil Engineering Manager/Associate

LRL ENGINEERING | INGÉNIERIE
Head Office – 5430 Canotek Rd., Ottawa, ON
Pembroke Office – 1344 Pembroke St W, Pembroke ON
C +1 613-915-9503 **E** vjohnson@lrl.ca
Ottawa | *Pembroke* | *Moncton*
www.lrl.ca

Classified as City of Ottawa - Internal / Ville d'Ottawa - classé interne

From: Dieme, Abi <Abibatou.Dieme@ottawa.ca>
Sent: May 13, 2025 4:28 PM
To: Virginia Johnson <vjohnson@lrl.ca>; Sarthak Vora <svora@lrl.ca>
Cc: Virginia Johnson <vjohnson@lrl.ca>; Gorni, Colette <colette.gorni@ottawa.ca>; Roy, Jean-Miguel <Jean-Miguel.Roy@ottawa.ca>; rodneyw@theiapartners.com; Shen, Stream <Stream.Shen@ottawa.ca>
Subject: RE: 30 Cleary - Update SWM criteria

Hello Virginia and Sarthak,

As I was further looking into the SWM background for this project, I noted that 30 Cleary is located within the Westboro study area in the Stormwater Management Guidelines for the Pinecrest/Westboro Area, just at the edge. The report identifies one additional criterion to meet for development:
A minimum on-site retention of the 10mm design storm.
I have included the capture below from the report for reference.

We have updated the feedback form accordingly.

I am available to discuss further if needed.

Residential Development Requiring Site Plan Control Approval - discharging directly to the Ottawa River			
3	all soil infiltration rates	A minimum on-site retention of the 10 mm design storm; refer to LID references[I] for guidance on prudent approach to planning infiltration-based LID best management practices. Assumptions re: non-viability of infiltration measures must be substantiated. A green roof, rain harvesting measures and/or a combination of detention/retention measures[II] could be implemented to provide further runoff volume reduction.	On-site some of accomp of first 1

Regards,
Abi

Classified as City of Ottawa - Internal / Ville d'Ottawa - classé interne

From: Sarthak Vora <svora@lrl.ca>
Sent: Wednesday, March 19, 2025 3:42 PM
To: Dieme, Abi <Abibatou.Dieme@ottawa.ca>; Roy, Jean-Miguel <Jean-Miguel.Roy@ottawa.ca>
Cc: Virginia Johnson <vjohnson@lrl.ca>
Subject: RE: LRL230437 30 Cleary Ave_Catchment & IFC plan req

CAUTION: This email originated from an External Sender. Please do not click links or open attachments unless you recognize the source.

ATTENTION : Ce courriel provient d'un expéditeur externe. Ne cliquez sur aucun lien et n'ouvrez pas de pièce jointe, excepté si vous connaissez l'expéditeur.

Hi Abi,

We had a meeting earlier today with NCC regarding the stormwater outlet to the north of the subject site (30 Cleary Ave) that discharges onto NCC lands. One of their primary concerns is confirming the downstream capacity of the

outlet and ensuring that flow from our site will not negatively impact the downstream sewer that conveys stormwater from the NCC outlet to the river.

To help address this, would you be able to provide us with a **catchment drawing or watershed plan** for the section of Kichi Zibi Mikan abutting the subject site? This would allow us to confirm the allowable release rate for the site and ensure appropriate quantity control to maintain equal or reduced peak flow.
Additionally, since this section of Kichi Zibi Mikan is currently under construction, an **IFC plan** showing the exact location and alignment of the storm sewer outletting the NCC outlet to the river would be extremely helpful. GeoOttawa indicates a watercourse near the site, but there is no information on its outlet. We could reach out to the GeoInformation Centre or submit a record request, but since this section is under construction, they may not yet have the necessary information available (we haven't had much luck obtaining as-built PDFs for services along Richmond Rd for the same reason).
Understanding the downstream sewer capacity is critical for our ongoing discussions with NCC. They have expressed concerns about increased volume at the downstream point. Having this information will help us reassure them, as the lands currently contributing runoff to NCC are already in an impervious state (asphalt pavement) and, our proposed development will provide quantity and quality control measures, neither of which are accounted for under the existing conditions.

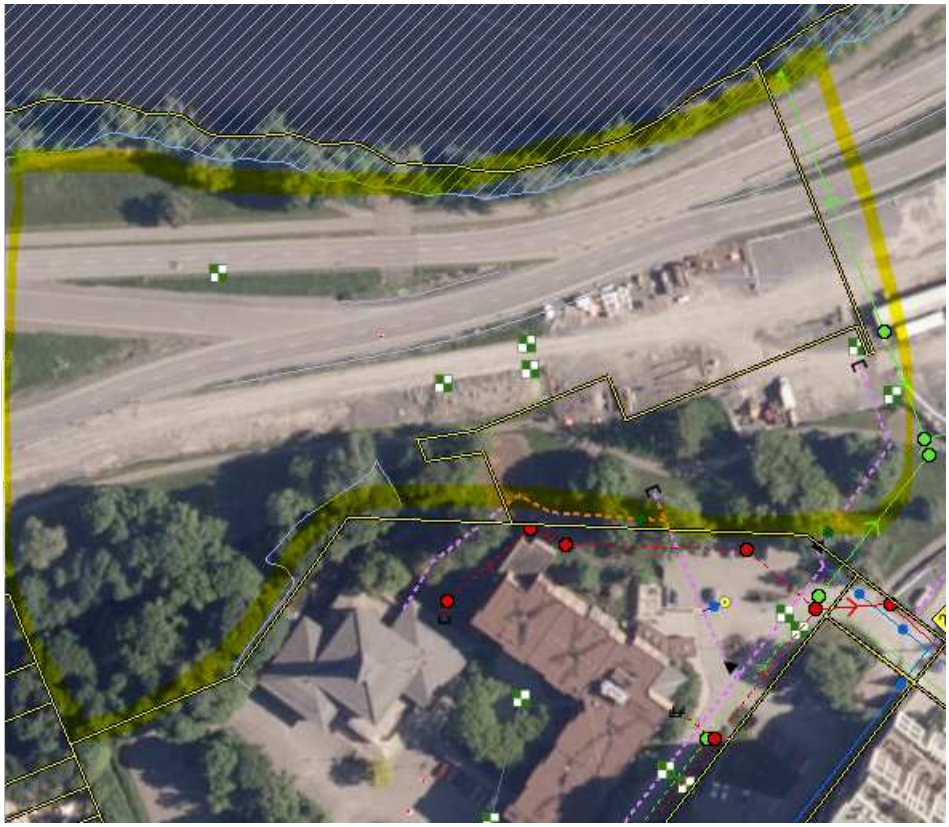

Since this discussion will directly impact the SWM criteria for the site, we're working on a tight timeline and would really appreciate a quick response. Please let me know if you need any further details or clarification.

Thanks in advance for your help!

Sarthak Vora, Civil E.I.T

LRL ENGINEERING | INGÉNIERIE
Head Office – 5430 Canotek Rd., Ottawa, ON
T +1 613-842-3434 **C** +1 613-915-7633 **E** svora@lrl.ca
Ottawa | Pembroke | Moncton

www.lrl.ca

'

This e-mail originates from the City of Ottawa e-mail system. Any distribution, use or copying of this e-mail or the information it contains by other than the intended recipient(s) is unauthorized. Thank you.

Le présent courriel a été expédié par le système de courriels de la Ville d'Ottawa. Toute distribution, utilisation ou reproduction du courriel ou des renseignements qui s'y trouvent par une personne autre que son destinataire prévu est interdite. Je vous remercie de votre collaboration.

'
'

This e-mail originates from the City of Ottawa e-mail system. Any distribution, use or copying of this e-mail or the information it contains by other than the intended recipient(s) is unauthorized. Thank you.

Le présent courriel a été expédié par le système de courriels de la Ville d'Ottawa. Toute distribution, utilisation ou reproduction du courriel ou des renseignements qui s'y trouvent par une personne autre que son destinataire prévu est interdite. Je vous remercie de votre collaboration.

'

APPENDIX I

Off-Site Stormwater Management Supporting Documents

ADS Stormtech Chmaber

Site Servicing and Stormwater Management Brief – 851 Richmond Road, Ottawa, ON

File: 160401329/83

Prepared for:
Homestead Land Holdings Ltd.

Prepared by:
Stantec Consulting Ltd.

August 27, 2018

Revision Record							
Revision	Description	Prepared By		Checked By		Approved By	
0	1st submission	A. Paerez	10/03/2017	S. Gillis	10/04/2017	A. Paerez	10/06/2017
1	2nd submission	N. Cody	27/03/2018	S. Gillis	27/03/2018	P. Moroz	27/03/2018
2	3rd Submission	W. Johnson	29/06/2018	S. Gillis	29/06/2018	N. Cody	29/06/2018
3	4th Submission	W.Johnson	27/08/2018	S.Gillis	27/08/2018	P.Moroz	27/08/2018

Sign-off Sheet

This document entitled Site Servicing and Stormwater Management Brief – 851 Richmond Road, Ottawa, ON was prepared by Stantec Consulting Ltd. ("Stantec") for the account of Homestead Land Holdings Ltd. (the "Client"). Any reliance on this document by any third party is strictly prohibited. The material in it reflects Stantec's professional judgment in light of the scope, schedule and other limitations stated in the document and in the contract between Stantec and the Client. The opinions in the document are based on conditions and information existing at the time the document was published and do not take into account any subsequent changes. In preparing the document, Stantec did not verify information supplied to it by others. Any use which a third party makes of this document is the responsibility of such third party. Such third party agrees that Stantec shall not be responsible for costs or damages of any kind, if any, suffered by it or any other third party as a result of decisions made or actions taken based on this document.

Approved by 

(signature)

Sheridan Gillis

Approved by 

(signature)

Peter Moroz, P. Eng.

Table of Contents

1.0 INTRODUCTION AND OBJECTIVE....1.1
1.1 OBJECTIVE.... 1.1
1.2 PREVIOUS SUBMISSIONS.... 1.3

2.0 REFERENCES....2.1

3.0 WATER DISTRIBUTION....3.1

4.0 SANITARY SEWER....4.1
4.1 SANITARY SEWER DESIGN CRITERIA.... 4.2

5.0 STORMWATER MANAGEMENT....5.1
5.1 OBJECTIVES.... 5.1
5.2 EXISTING CONDITIONS.... 5.1
5.2.1 Existing Drainage Outlet Rate.... **Error! Bookmark not defined.**
5.3 SWM CRITERIA AND CONSTRAINTS.... 5.1
5.4 STORMWATER MANAGEMENT DESIGN.... 5.2
5.4.1 Design Methodology.... 5.3
5.4.2 Water Quantity Control.... 5.3
5.4.3 Allowable Release Rate.... 5.3
5.4.4 Storage Requirements.... 5.3
5.4.5 Uncontrolled Area.... 5.5
5.4.6 Results.... 5.5
5.5 QUALITY CONTROL.... 5.6

6.0 GRADING AND DRAINAGE....6.1

7.0 UTILITIES....7.1

8.0 EROSION CONTROL DURING CONSTRUCTION....8.1

9.0 GEOTECHNICAL INVESTIGATION....9.1

10.0 CONCLUSIONS....10.1
10.1 WATER SERVICING.... 10.1
10.2 SANITARY SERVICING.... 10.1
10.3 STORMWATER SERVICING.... 10.1
10.4 GRADING.... 10.1
10.5 UTILITIES.... 10.2
10.6 APPROVAL / PERMITS.... 10.2

LIST OF TABLES

Table 1: Estimated Water Demands.... 3.1
Table 2: Estimated Wastewater Peak Flow.... 4.1

Table 3: Target Release Rate 5.3
Table 4: Peak Controlled (Rooftop) 2-Year Release Rate 5.4
Table 5: Peak Controlled (Rooftop) 100-Year Release Rate 5.4
Table 6: Peak Uncontrolled (Non-tributary) 2-Year Release Rate 5.5
Table 7: Peak Uncontrolled (Non-tributary) 100-Year Release Rate 5.5
Table 8: Estimated Discharge from Site (2-Year) 5.5
Table 9: Estimated Discharge From Site (100-Year) 5.6
Table 10: Treatment Capacity Figures for Stormceptor Model STC-750 ..... 5.6

LIST OF FIGURES

Figure 1: Site Location 1.1

LIST OF APPENDICES

APPENDIX A HYDRAULIC ANALYSIS A.1

APPENDIX B PROPOSED SITE PLAN B.1

APPENDIX C SANITARY SEWER CALCULATIONS C.1

APPENDIX D STORMWATER MANAGEMENT CALCULATIONS D.1

APPENDIX E GEOTECHNICAL REPORT E.1

APPENDIX F CITY OF OTTAWA SERVICING STUDY CHECKLIST F.1

APPENDIX G CORRESPONDENCE G.1

APPENDIX H DRAWINGS H.1

1.0 INTRODUCTION AND OBJECTIVE

Stantec Consulting Ltd. has been retained by Homestead Lands Holding Ltd. to prepare the following site servicing and stormwater management (SWM) brief to satisfy the City of Ottawa Site Plan Control Application process. The site is located at 851 Richmond Road, west of the intersection of Byron Avenue and Sherbourne Road and south-west of the intersection of Richmond Road and Cleary Avenue in the city of Ottawa (see **Figure 1** below).

The site proposed for re-development measures 0.31 ha, while the existing developed site area to the southwest measures 0.28 ha, for an overall area of 0.59 ha. The proposed re-development area is currently occupied by parking areas and a small vegetated strip. The proposed development consists of an eleven-storey residential building with 122 units, underground parking and associated access and servicing infrastructure.

Figure 1: Site Location

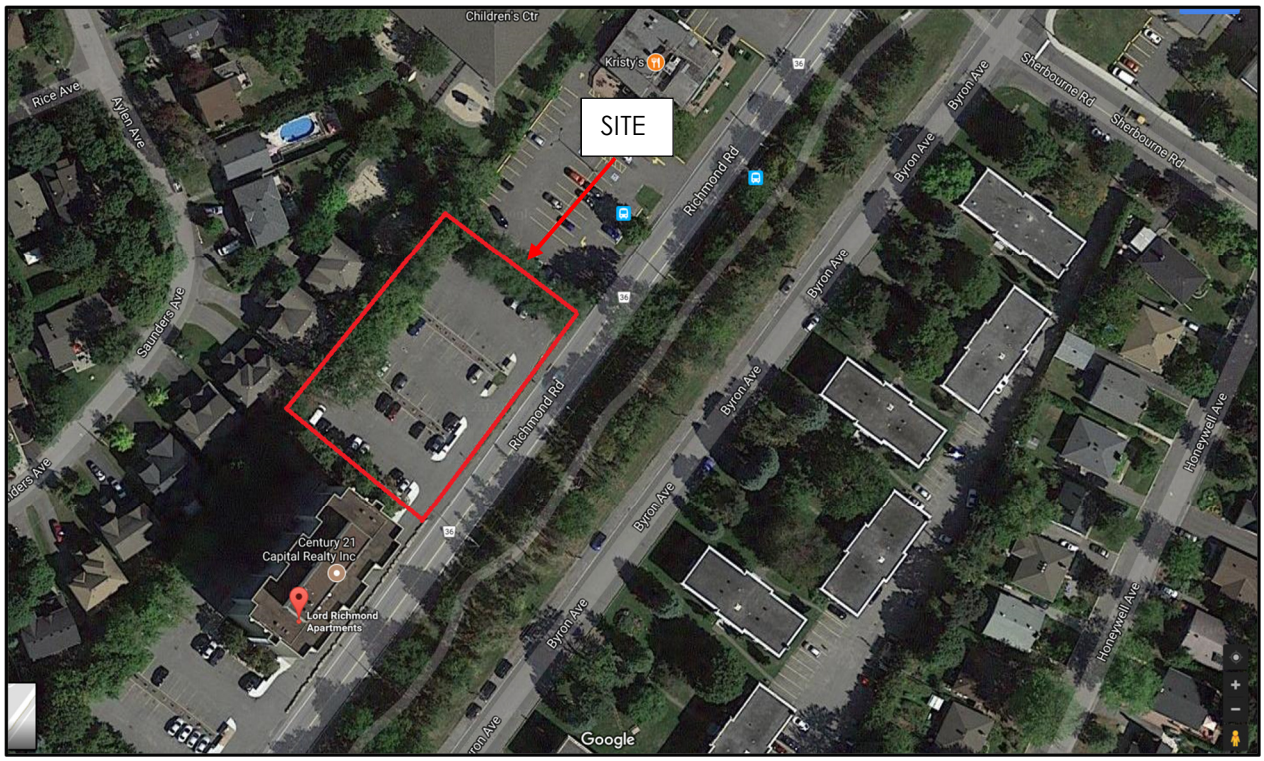

1.1 OBJECTIVE

This site servicing and SWM brief has been prepared to present a servicing scheme that is free of conflicts and which utilizes the existing infrastructure as obtained from available as-built drawings and in consultation with City of Ottawa staff. Infrastructure requirements for water supply, sanitary and storm sewer services are presented in this report.

Criteria and constraints provided by the City of Ottawa have been used as a basis for the conceptual servicing design of the proposed development. Specific elements and potential development constraints to be addressed are as follows:

- Prepare a preliminary grading plan in accordance with the proposed site plan and existing grades.
- Storm Sewer Servicing
    - Define major and minor conveyance systems in conjunction with the proposed grading plan
    - Determine the stormwater management storage requirements to meet the allowable release rate for the site
    - Coordinate with mechanical engineer to convey roof top drainage, trench drainage from the parking garage entrance, and area drainage from exterior drive aisle within the internal mechanical system and discharge to the proposed OGS unit.
    - install an oil/grit separator (OGS) to provide 'Enhanced' quality treatment (80% TSS removal) of runoff from the proposed development area.
    - Define and size the proposed storm sewers that will be connected to the existing 375 mm diameter CSP outlet located in the northeast corner of the site
- Wastewater Servicing
    - Define and size the sanitary service laterals which will be connected to the existing 225 mm diameter on Richmond Road
- Water Servicing
    - Estimate water demands to characterize the proposed feed for the proposed development which will be serviced from the existing 203 mm diameter watermain on Richmond Road.
    - Watermain servicing for the development is to be able to provide average day and maximum day (including peak hour) demands (i.e. non-emergency conditions) at pressures within the acceptable range of 50 to 70 psi (350 to 480 kPa)
    - Under fire flow (emergency) conditions, the water distribution system is to maintain a minimum pressure greater than 20 psi (140 kPa)

The accompanying drawings included in the back of this report illustrate the preliminary internal servicing scheme for the site.

1.2 PREVIOUS SUBMISSIONS

The 3rd submission of this report was completed on June 29th, 2018 and was sent for comments to the City of Ottawa. Comments from the City were received July 23rd, 2018. The comments letter and Stantec's response to the comments pertinent to this report are contained in Appendix G – Correspondence.

2.0 REFERENCES

The following background studies have been referenced during the preliminary servicing design of the proposed site:

- *Assessment of Adequacy of Public Services for OCEF Corp 809 Richmond Road*, David Schaeffer Engineering Ltd., December 2016
- *City of Ottawa Design Guidelines – Water Distribution*, City of Ottawa, July 2010
- *City of Ottawa Sewer Design Guidelines*, City of Ottawa, October 2012
- *Technical Bulletin ISDTB-2014-01,* City of Ottawa, February 2014
- *Technical Bulletin ISTB-2018-01*, City of Ottawa, March 21, 2018
- *Technical Bulletin ISTB-2018-02*, City of Ottawa, March 21, 2018
- *Technical Bulletin ISTB-2018-03*, City of Ottawa, March 21, 2018
- *Technical Bulletin PIEDTB -2016-01,* City of Ottawa, September 6, 2016
- *Geotechnical Investigation Proposed Multi-Storey Building 851 Richmond Road – Ottawa,* Paterson Group, October 3, 2017
- *Stormwater Management Report, River Parkway Preschool Centre, 40 Cleary Avenue, City of Ottawa*, J.L. Richards & Associates Limited, Revised January 2007

3.0 WATER DISTRIBUTION

The proposed building is located in Pressure Zone 1W of the City of Ottawa's Water Distribution System. The proposed development will be serviced through the existing 203 mm diameter watermain on Richmond Road as shown on the Site Servicing Plan (see **Drawing SSP-1**).

The proposed eleven-storey building is to be a high-rise residential building with a mix of one-bedroom and two-bedroom apartments for a total of 122 units, and underground parking. The building is to have a total floor space of approximately 12,479 m2 (1.25 ha) above grade.

Water demands were calculated using the City of Ottawa Water Distribution Guidelines (July, 2010) to determine the typical operating pressures to be expected at the building (see detailed calculations in **Appendix A**). A daily rate of 350 L/cap/day has been applied for the population of the proposed site. The average daily (AVDY) residential demand was estimated for an occupancy of 1.4 persons per unit for a one-bedroom apartment and 2.1 persons per unit for a two-bedroom apartment. Maximum day (MXDY) residential demand was determined by multiplying the AVDY demand by a factor of 2.5 and peak hourly (PKHR) residential demand was determined by multiplying the MXDY demand by a factor of 2.2. The estimated demands are summarized in **Table 1**.

Table 1: Estimated Water Demands

	Population	AVDY (L/s)	MXDY (L/s)	PKHR (L/s)
Residential	221	0.90	2.24	4.92

1. Residential population based on 72 two-bedroom apartments and 50 one-bedroom apartments.

The fire flow requirement was calculated in accordance with Fire Underwriters Survey (FUS) and determined to be approximately 5,000 L/min (83 L/s). This estimate is based on a non-combustible construction building with a two-hour fire separation considered between each floor per requirements for buildings over six-storeys per Ontario Building Code. Additionally, it is anticipated that all buildings will be sprinklered, with final sprinkler design to conform to NFPA 13 (see detailed calculations in **Appendix A**).

The boundary conditions listed below were provided by the City of Ottawa on June 28, 2017 for the estimated water demands shown in **Table 1**.

Minimum HGL = 108.6 m

Maximum HGL = 116.2 m

MXDY (2.3L/s) + Fire Flow (83 L/s) = 99.0 m

The desired normal operating objective pressure range as per the City of Ottawa 2010 Water Distribution Design Guidelines is 350 kPa (50 psi) to 480kPa (70 psi) and no *less than 275kPa (40 psi)* at ground elevation. Furthermore, the maximum pressure at any point in the water

distribution should not exceed 100 psi as per the Ontario Building/Plumbing Code; pressure reducing measures are required to service areas where pressures *greater than 552kPa (80 psi)* are anticipated.

The ground elevation along Richmond Road where the proposed building is to be connected is approximately 65.92 m. With respect to the peak hour flow conditions, the resulting boundary condition HGL of 108.6 m corresponds to a peak hour pressure of 418kPa (61 psi). Since the proposed building is an 11-storey building, an additional 34 kPa (5 psi) for every additional storey over two storeys is required to account for the change in elevation head and additional headloss. Given that the lowest pressure is expected to be 418 kPa (61 psi) at ground level, the resultant equivalent pressure at the 11th floor will be approximately 110 kPa (16 psi) and below the City's objective pressures. As a result, a pump will be required to maintain an acceptable level of service on the higher floors.

A maximum pressure check can be conducted using the building's finished floor elevation (66.36m) and the maximum boundary condition HGL of 116.2 m. This results in a pressure of 49.84m, or 489 kPa (70 psi). This value is below the limit of 80 psi which would require pressure reducing valves.

In regards to available fire flow, boundary conditions provided by the City confirm that a flow rate of 5,000 L/min (83 L/s) would have a residual pressure of 324kPa (47 psi). The fire flow rate should be achievable within the watermain at this proposed location while maintaining a residual pressure of 138kPa (20 psi).

In conclusion, based on the boundary conditions provided, the 203 mm diameter watermain on Richmond Road provides adequate fire flow capacity as per the Fire Underwriters Survey. In order to meet the City water supply objective that limits a single feed to 50 m^3/d during basic day demands, dual connection to the existing 203 mm diameter watermain on Richmond Road is required to service the proposed building. The service connection will be capable of providing anticipated demands to the lower storeys but will require a booster pump to maintain minimum pressures of 276 kPa (40 psi) for floors 7 to 11.

4.0 SANITARY SEWER

As illustrated on **Drawing SSP-1**, sanitary servicing for the proposed development will be provided through a proposed 200 mm diameter service lateral connecting to the existing 225 mm diameter sanitary sewer running east on Richmond Road. The 225mm Richmond Road public sewer ultimately discharges to a 1500mm diameter sanitary trunk sewer at the intersection of Richmond Road and Sherbourne Road.

The proposed 0.31 ha re-development area will consist of 50 one-bedroom apartments, 72 two-bedroom apartments, underground parking, and associated access infrastructure. The anticipated wastewater peak flow generated from the proposed development is summarized in **Table 2** below while a sanitary sewer design sheet is included in **Appendix C**.

Table 2: Estimated Wastewater Peak Flow

Residential Units				Infiltration Flow (L/s)	Total Peak Flow (L/s)
# of Units	Population	Peak Factor	Peak Flow (L/s)		
122	221	4.0	2.87	0.08	2.95

1. Average residential flow based on 280 L/p/day
2. Peak factor for residential units calculated using Harmon's formula
3. Apartment population estimated based on 1.4 persons/unit for one-bedroom apartments and 2.1 persons/unit for two-bedroom apartments
4. Infiltration flow based on 0.33 L/s/ha.
5. Figures may not exactly sum due to rounding

An analysis of the existing 225 mm diameter sanitary sewer on Richmond Road was completed in DSEL's Assessment of Adequacy of Public Services – 809 Richmond Road in December 2016 to estimate the available capacity within the sewer. The analysis concluded that the existing sanitary sewer had additional capacity for 42.6 L/s, and that the proposed development on 809 Richmond Road would generate 7.44 L/s of peak wet weather flow. As a result, the residual capacity of 35.2 L/s in the existing sewer will be sufficient to accommodate the proposed development's rate of 2.95 L/s.

Detailed sanitary sewage calculations are included in **Appendix C**. A backflow preventer will be required for the proposed building in accordance with the Ottawa sewer design guide and will be coordinated with building mechanical engineers.

All underground parking drains should be connected to the internal building plumbing. A sump pump will be required to drain the underground parking levels to the existing sanitary sewer on Richmond Road.

4.1 SANITARY SEWER DESIGN CRITERIA

As outlined in the City of Ottawa Sewer Design Guidelines and the MOECC's Design Guidelines for Sewage Works, the following criteria were used to calculate estimated wastewater flow rates and to size the sanitary sewer lateral:

- Minimum Velocity – 0.6 m/s (0.8 m/s for upstream sections)
- Maximum Velocity – 3.0 m/s
- Manning roughness coefficient for all smooth wall pipes – 0.013
- 1.4 persons/one-bedroom apartment
- 2.1 persons/two-bedroom apartment
- Harmon's Formula for Peak Factor – Max = 4.0
- Extraneous Flow Allowance – 0.33 L/s/ha (conservative value)
- Manhole Spacing – 120 m
- Minimum Cover – 2.5 m

5.0 STORMWATER MANAGEMENT

5.1 OBJECTIVES

The objective of this stormwater management plan is to determine the measures necessary to control the quantity of stormwater released from the proposed development to the required levels and to provide sufficient detail for approval and construction.

5.2 EXISTING CONDITIONS

The site is currently paved consisting of parking areas for the existing 11-storey building immediately to the southwest. The existing parking areas sheet drain towards three existing catchbasins connected to a storm sewer system that conveys runoff from the site and discharges into an existing 375 mm diameter CSP at the northeast corner of the property. Based on visual observations during a recent site visit, there are no visible inlet controls installed in the existing catchbasins. The existing 375mm diameter CSP outlets to the north to sewers within the adjacent property at 40 Cleary Avenue (see **Drawing EX-1**).

The on-site sewer for 40 Cleary Avenue delivers flow through their property via a series of pipes, swales and ditches eventually outletting to the Ottawa River. As part of the site plan control application for 40 Clearly Avenue, a Stormwater Management Report was prepared by J.L. Richards and Associates in 2008. The report as it's been made available has been included in Appendix D. The report indicates that the 100-year peak flow from the 851 Richmond Road site was anticipated in their design and accommodated in the downstream sewer system capacity.

5.3 SWM CRITERIA AND CONSTRAINTS

The stormwater management criteria for the proposed site are based on City of Ottawa Sewer Design Guidelines (2012) and on consultation with City of Ottawa Staff. The following summarizes the criteria used in the preparation of this stormwater management plan:

- SWM Report for 40 Cleary Avenue identifies downstream discharge criteria, anticipating 851 Richmond Road site with C=0.90, Area=0.60, T/C of 10mins, accommodating 100-year peak flow in the existing 525mm downstream sewer. The allowable outlet rate is Q = 2.78 x C x I x A = 2.78 x 0.9 x 178.56 x 0.6 = **267.8 L/s**.
- Maximum 100-year water depth of 0.35 m in parking and access areas
- Provide adequate emergency overflow conveyance (overland flow route) to Richmond Road.
- Provide a storm outlet for the existing Lord Richmond Apartments.

- Size the storm lateral to convey the 100-year storm event, assuming only roof controls are imposed (i.e. provide capacity for system without inlet control devices (ICDs) installed)

- Size storm sewers using an inlet time of concentration (Tc) of 10 minutes

- Post-development runoff coefficient (C) value based on proposed impervious areas as per site plan drawing (see **Appendix B**)

5.4 STORMWATER MANAGEMENT DESIGN

The proposed 0.31 ha re-development area consists of an eleven-storey residential building, underground parking, access and landscaped areas, and associated servicing infrastructure. The imperviousness of the proposed site is 70% (C = 0.69). In combination with the existing area, the site measures 0.617 ha and has an overall imperviousness of 80% (C = 0.76).

The 851 Richmond Road development was identified as "Lord Richmond Apartments" in the 40 Cleary Avenue SWM report which designed the downstream infrastructure to convey the 100-year storm event for the site assuming a 0.60 ha area with a runoff coefficient of 0.90 and a time of concentration of 10 minutes.

While the downstream system has been designed to accommodate 100-year flows for 851 Richmond Road, the SWM strategy for the site will still provide roof top control on the proposed building to attenuate peak flows in the downstream system. A storm sewer system has been designed to convey flows from the existing 851 Richmond Road Apartment and parking lot, to the existing outlet along the north/west property line to an oil grit separator and ultimately discharging to the existing 375mm CSP outlet to 40 Cleary Avenue. The proposed expansion area will convey storm drainage through a combination of flow-control roof drains, trench drain for the underground parking ramp, and area drain for the building exterior and direct these flows to a sump pit and pump the flows to the oil grit separator at the north east corner of the building. Coordination with the mechanical consultant has been ongoing and current plans have been provided and flows identified to size the internal system. In addition to the storm conveyance, the internal mechanical system will also be designed to discharge to the building foundation drain.

The proposed oil and grit separator (an STC-750) will be installed just outside the underground parking structure to provide the required 80% TSS removal from runoff from the proposed development. The oil grit separator has been designed to provide quality control for the both the proposed expansion area and the existing 851 Richmond Road Apartment site.

As part of the proposed development, it is required that runoff from the existing development to the south be pumped on a temporary basis during construction across to the existing 375 mm diameter storm outlet.

The conceptual site plan and existing storm sewer infrastructure are shown on **Drawing SSP-1**.

5.4.1 Design Methodology

The intent of the stormwater management plan presented herein is to mitigate any negative impact that the proposed development could have on the existing drainage and storm sewer infrastructure, while providing adequate capacity to service the existing and proposed building, parking and access areas. The proposed stormwater management plan is designed to detain runoff on the rooftop to ensure that peak flows after construction from the proposed re-development area will not exceed the target release rate for the site.

A small portion of the site fronting Richmond Road could not be graded to enter the building's internal plumbing system and as such it will sheet drain uncontrolled. Runoff from this uncontrolled area is included in the overall site discharge calculations.

5.4.2 Water Quantity Control

The Modified Rational Method was used to assess the quantity and volume of runoff generated during post development conditions. The site was subdivided into subcatchments (subareas) tributary to storm sewer inlets, as defined by the location of catchbasins / inlet grates, and used in the storm sewer design (see **Appendix D**). A summary of subareas and runoff coefficients is provided in **Appendix D**, and **Drawing SD-1** indicates the stormwater management subcatchments.

5.4.3 Allowable Release Rate

Site discharge rates up to the 100-year storm event are to be restricted to the 100-year storm event with a runoff coefficient ('C' value of 0.90) as outlined below in Table 3. The overall site (existing and proposed sites) measure 0.59 ha, however the area discharging to Richmond Road is excluded (EXT-1 - 0.09 ha) therefore the remaining area measures 0.50 ha.

Table 3: Target Release Rate

Rational Method 'C'	Area (ha)	Time of Concentration (min)	Q_{Target} (L/s)
0.90	0.60	10	267.8

5.4.4 Storage Requirements

The site does not require quantity control measures to meet the stormwater release criteria, however to reduce the impact of the peak flow rates on the oil and grit separator sizing, it is proposed that restricted release rooftop drains be used. **Drawing SD-1** indicates the design release rate from the rooftop. Stormwater management calculations are provided in **Appendix D**.

5.4.4.1 Rooftop Storage

It is proposed to detain stormwater on the rooftop of the proposed building by installing restricted flow roof drains. The following calculations assume the roof will be equipped with standard Watts Model R1100 Accuflow Roof Drains fully open. The existing rooftop will not need to be retrofitted.

Watts "Accuflow" roof drain data has been used to calculate a practical roof release rate and detention storage volume for the rooftops. It should be noted that the "Accuflow" roof drain has been used as an example only and that other products may be specified for use, provided that the roof release rate is restricted to match the maximum rate of release indicated in the tables below and that sufficient roof storage is provided to meet (or exceed) the resulting volume of detained stormwater.

Table 4 and **Table 5** provide details regarding the detention of stormwater on the proposed rooftop during the 2 and 100-year storm events. Refer to **Appendix D** for details.

Table 4: Peak Controlled (Rooftop) 2-Year Release Rate

Area ID	Area (ha)	Head (m)	$Q_{release}$ (L/s)	V_{stored} (m^3)	$V_{available}$ (m^3)
BLDG1	0.019	0.097	0.93	1.8	6.5
BLDG2	0.013	0.088	0.87	1.0	4.5
BLDG3	0.013	0.088	0.87	0.9	4.4
BLDG4	0.015	0.092	0.89	1.3	5.2
BLDG5	0.017	0.094	0.91	1.5	5.8
BLDG6	0.02	0.099	0.94	2.1	7.2
BLDG7	0.009	0.081	0.82	0.5	3
BLDG8	0.009	0.081	0.82	0.5	3
BLDG9	0.004	0.054	0.65	0.1	1.4
TOTAL	0.12		7.70	9.7	41

Table 5: Peak Controlled (Rooftop) 100-Year Release Rate

Area ID	Area (ha)	Head (m)	$Q_{release}$ (L/s)	V_{stored} (m^3)	$V_{available}$ (m^3)
BLDG1	0.019	0.148	1.25	6.3	6.5
BLDG2	0.013	0.14	1.20	3.7	4.5
BLDG3	0.013	0.14	1.20	3.7	4.4
BLDG4	0.015	0.144	1.22	4.7	5.2
BLDG5	0.017	0.146	1.24	5.4	5.8
BLDG6	0.02	0.15	1.26	7.2	7.2
BLDG7	0.009	0.131	1.14	2	3
BLDG8	0.009	0.131	1.14	2	3
BLDG9	0.004	0.111	1.01	0.6	1.4
TOTAL	0.12		10.66	35.6	41

5.4.4.2 Surface Grading

The catchbasins in the existing Lord Richmond parking lot will be removed and replaced with two new catchbasins – CB203 and CBMH102. These structures will not need to be outfitted with inlet control devices. Although ponding is not needed to limit release rates, grading will still ensure that overland flow principles are implemented in case of a blockage of the minor system.

5.4.5 Uncontrolled Area

A small portion of the site fronting Richmond Road (see area fronting on Richmond Road on **Drawing SD-1**) could not be graded to enter the building's internal plumbing system and as such it will sheet drain uncontrolled. **Table 6** and **Table 7** summarize the 2 and 100-year uncontrolled release rates from the proposed development.

Table 6: Peak Uncontrolled (Non-tributary) 2-Year Release Rate

Area ID	Area (ha)	Runoff 'C'	Tc (min)	$Q_{release}$ (L/s)
UNC-1	0.11	0.60	10	14.1

Table 7: Peak Uncontrolled (Non-tributary) 100-Year Release Rate

Area ID	Area (ha)	Runoff 'C'	Tc (min)	$Q_{release}$ (L/s)
UNC-1	0.11	0.75	10	41.0

5.4.6 Results

Table 8 and **Table 9** demonstrate that the proposed stormwater management plan provides adequate attenuation storage to meet the target peak outflow for the site.

Table 8: Estimated Discharge from Site (2-Year)

Area Type	$Q_{release}$ (L/s)	Target (L/s)
Controlled Roof Area (BLDG)	7.7	**267.8**
Uncontrolled Surface Area Tributary to Outlet (L203A, L202A, L201A, RAMP, EX-BLDG)	63.5	
Uncontrolled, tributary to Richmond Road	14.1	
Total	**85.3**	

Table 9: Estimated Discharge From Site (100-Year)

Area Type	$Q_{release}$ (L/s)	Target (L/s)
Controlled Roof Area (BLDG)	10.7	**267.8**
Uncontrolled Surface Area Tributary to Outlet (L203A, L202A, L201A, RAMP, EX-BLDG)	179.8	
Uncontrolled, tributary to Richmond Road	41.0	
Total	**231.4**	

5.5 QUALITY CONTROL

As per correspondence with Rideau Valley Conservation Authority (RVCA) staff, runoff from the proposed and existing development requires 'Enhanced' quality treatment (80% TSS removal) prior to discharge into the site outlet which ultimately directs runoff to the Ottawa River.

As a result, it is proposed to install an oil/grit separator (OGS) unit just outside the underground parking structure to provide the required level of treatment of runoff from the existing and proposed site areas. The PCSWMM for Stormceptor software has been used to provide sizing. It should be noted that the Stormceptor unit has been used as an example only and that other products may be specified for use, provided that they meet the required level of treatment. See **Appendix D** for the Stormceptor sizing report and a detail drawing of the STC-750.

Based on sizing the entire tributary site area (approx. 0.5 ha @ 85.7% imperviousness) and using a fine particle size distribution, a Stormceptor model of STC750 will provide 81% TSS removal, exceeding the required target of 80% TSS removal.

Table 10: Treatment Capacity Figures for Stormceptor Model STC-750

Stormceptor Model	Treatment Rate (L/s)	Total Storage Volume (L)	Hydrocarbon Storage Capacity (L)	Maximum Sediment Capacity (L)
STC 750	22.4	4,070	915	3,000

6.0 GRADING AND DRAINAGE

The proposed re-development site measures approximately 0.31 ha in area. The site currently sheet drains towards three existing catchbasins. A detailed grading plan (see **Drawing GP-1**) has been provided to satisfy the stormwater management requirements and to provide sufficient cover over top of the underground parking garage. Site grading has been established to provide emergency overland flow routes for stormwater management in accordance with City of Ottawa requirements.

The subject site maintains emergency overland flow routes to the existing property to the north as depicted on **Drawings GP-1** and **SD-1**.

7.0 UTILITIES

All utilities (Hydro Ottawa, Bell Canada, Rogers Ottawa, and Enbridge Gas) have existing plants in the area. The site will be serviced through connection to these existing services. Detailed design of the required utility services will be further investigated as part of the composite utility planning process following design circulation.

8.0 EROSION CONTROL DURING CONSTRUCTION

Erosion and sediment controls must be in place during construction. The following recommendations to the contractor will be included in contract documents.

1. Implement best management practices to provide appropriate protection of the existing and proposed drainage system and the receiving water course(s).
2. Limit extent of exposed soils at any given time.
3. Re-vegetate exposed areas as soon as possible.
4. Minimize the area to be cleared and grubbed.
5. Protect exposed slopes with plastic or synthetic mulches.
6. Provide sediment traps and basins during dewatering.
7. Install sediment traps (such as SiltSack® by Terrafix) between catch basins and frames.
8. Plan construction at proper time to avoid flooding.
9. Installation of a mud matt to prevent mud and debris from being transported off site.
10. Installation of a silt fence to prevent sediment runoff.

The contractor will, at every rainfall, complete inspections and guarantee proper performance. The inspection is to include:

1. Verification that water is not flowing under silt barriers.
2. Clean and change silt traps at catch basins.

Refer to **Drawing EC/DS-1** for the proposed location of silt fences, and other erosion control structures.

9.0 GEOTECHNICAL INVESTIGATION

A geotechnical report was prepared by Paterson Group October 2007 (see **Appendix E**). As stated in the geotechnical report, the subsurface profile across the site consists of 60 to 100 mm thickness of asphalt overlying a granular layer. The pavement structure lies atop a fill layer, consisting of brown to grey sand and gravel with trace to some silt and clay that extends to a depth of approximately 1.5 to 2.5 m. A native glacial till deposit was encountered underlying the above-noted fill layers, followed by grey limestone bedrock.

Groundwater levels were measured on June 8, 2017 and were found to range between 2.2 m and 3.7 m.

The contractor should be prepared to direct water away from all bearing surfaces and subgrades, regardless of the source, to prevent disturbance to the founding medium. Infiltration levels are anticipated to be low through the excavation face. The groundwater infiltration will be controllable with open sumps and pumps. A temporary MOECC permit to take water (PTTW) will be required for this project if more than 50,000 L/day are to be pumped during the construction phase. A minimum of four to five months should be allocated for completion of the application and issuance of the permit by the MOECC.

Bedrock removal will be required to complete the two (2) levels of underground parking. The geotechnical report recommended line drilling and controlled blasting to remove the bedrock. The report also recommended that prior to considering blasting operations, the effects on the existing services, buildings and other structures should be addressed.

An alignment of a large diameter watermain runs within an easement along the north property boundary of the subject site. It is expected that the adjacent watermain could be subjected to potential vibrations associated with the bedrock blasting program. To ensure that no detrimental vibrations cause damage to the adjacent watermain, a vibration attenuation trench is recommended for the bedrock along the north excavation face, as well as a vibration monitoring and control program during the blasting and excavation work required for the proposed building excavation (please refer to the Geotechnical report included in **Appendix E** for details).

The geotechnical report also recommended that a perimeter foundation drainage system be provided for the proposed structures. Given that it is expected that insufficient room will be available for exterior backfill, the report suggested that the foundation drainage system could be as follows:

- Bedrock vertical surface (Hoe ram any irregularities and prepare bedrock surface. Shotcrete areas to fill in cavities and smooth out angular features at the bedrock surface);
- Composite drainage layer.

Geotechnical Investigation
August 27, 2018

It was recommended that the composite drainage system (such as Miradrain G100N, Delta Drain 6000 or equivalent) extend down to the footing level. It was also recommended that 150 mm diameter sleeves at 3 m centres be cast in the footing or at the foundation wall/footing interface to allow the infiltration of water to flow to the interior perimeter drainage pipe. The perimeter drainage pipe and underfloor drainage system should direct water to sump pit(s) within the lower basement area for mechanical evacuation.

10.0 CONCLUSIONS

10.1 WATER SERVICING

The 203 mm diameter watermain on Richmond Road provides adequate fire flow capacity as per the Fire Underwriters Survey. In order to meet the City water supply objective that limits a single feed to 50 m^3/d during basic day demands, dual connection to the existing 203 mm diameter watermain on Richmond Road is required to service the proposed building. The service connection will be capable of providing anticipated demands to the lower storeys but will require a booster pump to maintain pressures of 276 kPa (40 psi) for floors 7 to 11.

10.2 SANITARY SERVICING

The proposed sanitary sewer lateral is sufficiently sized to provide gravity drainage for the site. The proposed site will be serviced by a 200 mm diameter service lateral directing wastewater flows to the existing 225 mm dia. Richmond Road sanitary sewer. A backflow preventer will be required for the proposed building in accordance with the Ottawa sewer design guide and will be coordinated with building mechanical engineers. The proposed sanitary drainage pattern is in accordance with direction from pre-consultation with City of Ottawa staff.

10.3 STORMWATER SERVICING

The proposed stormwater management plan is in compliance with the goals specified through consultation with the City of Ottawa, as well as local standards. Rooftop storage is provided on the proposed building and the sum of all flows from the site area into the minor system are under the required target release rate. An underground pump will be required to direct flows from the internal building drainage system to the proposed gravity service connected to the existing 375 mm dia. CSP running north and ultimately discharging into the Cleary Street storm sewer. An oil grit separator will be installed just outside the underground parking structure to provide 80% TSS removal for runoff generated from the proposed development areas.

10.4 GRADING

Grading for the site has been designed to provide an emergency overland flow route as per City requirements. Erosion and sediment control measures will be implemented during construction to reduce the impact on existing infrastructure. An alignment of a large diameter watermain runs within an easement along the north property boundary of the subject site. It is expected that the adjacent watermain could be subjected to potential vibrations associated with the bedrock blasting program. To ensure that no detrimental vibrations cause damage to the adjacent watermain, a vibration attenuation trench is recommended for the bedrock along the north

excavation face, as well as a vibration monitoring and control program during the blasting and excavation work required for the proposed building excavation.

10.5 UTILITIES

All utilities (Hydro Ottawa, Bell Canada, Rogers Ottawa, and Enbridge Gas) have existing plants in the subject area. Exact size, location and routing of utilities will be finalized after design circulation.

10.6 APPROVAL / PERMITS

Ministry of the Environment and Climate Change (MOECC) Environmental Compliance Approvals (ECA) are not expected to be required for the subject site as the site is private and will remain under singular ownership. A Permit to Take Water may be required for pumping requirements for construction of underground parking level. No other approval requirements from other regulatory agencies are anticipated.

APPENDICES

Appendix A HYDRAULIC ANALYSIS

851 Richmond Road - Domestic Water Demand Estimates

- Based on Roderick Lahey Architect Inc Site plan June 6, 2017

Building ID	Area (m^2)	Population	Daily Rate of Demand [1]	Avg Day Demand		Max Day Demand		Peak Hour Demand	
				(L/min)	(L/s)	(L/min)	(L/s)	(L/min)	(L/s)
Residential	11,424	227.5	350	55.3	0.92	138.2	2.30	304.1	5.07
Total Site :				**55.3**	**0.92**	**138.2**	**2.30**	**304.1**	**5.07**

1 Water demand criteria used to estimate peak demand rates for residential areas are as follows:

maximum day demand rate = 2.5 x average day demand rate

maximum hour demand rate = 2.2 x maximum day demand rate

From:	Balima, Nadege
To:	Rathnasooriya, Thakshika
Subject:	RE: Hydraulic Boundary Conditions - 851 Richmond Road
Date:	Tuesday, June 27, 2017 3:06:47 PM
Attachments:	image001.gif 851 Richmond June 2017.pdf

Hi Shika,
I have just received the results of the boundary condition request for the site in subject. Please find them below.

The following are boundary conditions, HGL, for hydraulic analysis at 851 Richmond (zone 1W) assumed to be connected to the 203mm on Richmond (see attached PDF for location).

Minimum HGL = 108.6

Maximum HGL = 116.2m

MaxDay (2.3 L/s) + FireFlow (83 L/s) = 99.0m

These are for current conditions and are based on computer model simulation.

Disclaimer: The boundary condition information is based on current operation of the city water distribution system. The computer model simulation is based on the best information available at the time. The operation of the water distribution system can change on a regular basis, resulting in a variation in boundary conditions. The physical properties of watermains deteriorate over time, as such must be assumed in the absence of actual field test data. The variation in physical watermain properties can therefore alter the results of the computer model simulation.

Please refer to Guidelines and Technical bulletin ISDTB-2014-02 concerning basic day demands greater than 0.5 L/s.

Please let me know if you have questions.

Regards,

Nadège Balima, P.Eng., M.P.M., LEED Green Assoc.
Project Manager, Infrastructure Approvals
Development Review Services (West)
613.580.2424 ext. 13477

From: Rathnasooriya, Thakshika [mailto:Thakshika.Rathnasooriya@stantec.com]
Sent: Tuesday, June 27, 2017 11:33 AM
To: Balima, Nadege <Nadege.Balima@ottawa.ca>
Subject: RE: Hydraulic Boundary Conditions - 851 Richmond Road

Hi Nadege,

Is it possible to have a status update on the hydraulic boundary conditions for this site?

Thank you,

Shika Rathnasooriya
Engineering Intern
Stantec
400 - 1331 Clyde Avenue, Ottawa ON K2C 3G4
Phone: (613) 724-4081
Thakshika.Rathnasooriya@stantec.com

The content of this email is the confidential property of Stantec and should not be copied, modified, retransmitted, or used for any purpose except with Stantec's written authorization. If you are not the intended recipient, please delete all copies and notify us immediately.

Please consider the environment before printing this email.

From: Balima, Nadege [mailto:Nadege.Balima@ottawa.ca]
Sent: Friday, June 23, 2017 8:52 AM
To: Rathnasooriya, Thakshika <Thakshika.Rathnasooriya@stantec.com>
Subject: RE: Hydraulic Boundary Conditions - 851 Richmond Road

Good morning Shika,
I have forwarded your request for processing and will get back to you as soon as I have results.
Thanks,

Nadège Balima, P.Eng., M.P.M., LEED Green Assoc.
Project Manager, Infrastructure Approvals
Development Review Services (West)
613.580.2424 ext. 13477

From: Rathnasooriya, Thakshika [mailto:Thakshika.Rathnasooriya@stantec.com]
Sent: Wednesday, June 21, 2017 1:50 PM
To: Balima, Nadege <Nadege.Balima@ottawa.ca>
Cc: Paerez, Ana <Ana.Paerez@stantec.com>
Subject: Hydraulic Boundary Conditions - 851 Richmond Road

Hello Nadege,

I am looking for watermain hydraulic boundary conditions for the proposed site at 851 Richmond Road. We anticipate connecting to the existing 200mm watermain on Richmond Road.

Attached are the FUS calculations for the proposed building. The intended land use is residential, for a 11 storey apartment building comprising 132 units with 61 two-bedrooms units and 71 one-bedroom units.

Estimated domestic demands and fire flow requirements for the site are as follows:
Average Day Demand – 0.92L/s
Max Day Demand – 2.30L/s

Peak Hour Demand – 5.07L/s
Fire Flow Requirement per FUS - 83L/s (2 hour fire separation between each floor)

Thanks,

Shika Rathnasooriya
Engineering Intern
Stantec
400 - 1331 Clyde Avenue, Ottawa ON K2C 3G4
Phone: (613) 724-4081
Thakshika.Rathnasooriya@stantec.com

The content of this email is the confidential property of Stantec and should not be copied, modified, retransmitted, or used for any purpose except with Stantec's written authorization. If you are not the intended recipient, please delete all copies and notify us immediately.

Please consider the environment before printing this email.

This e-mail originates from the City of Ottawa e-mail system. Any distribution, use or copying of this e-mail or the information it contains by other than the intended recipient(s) is unauthorized. Thank you.

Le présent courriel a été expédié par le système de courriels de la Ville d'Ottawa. Toute distribution, utilisation ou reproduction du courriel ou des renseignements qui s'y trouvent par une personne autre que son destinataire prévu est interdite. Je vous remercie de votre collaboration.

This e-mail originates from the City of Ottawa e-mail system. Any distribution, use or copying of this e-mail or the information it contains by other than the intended recipient(s) is unauthorized. Thank you.

Le présent courriel a été expédié par le système de courriels de la Ville d'Ottawa. Toute distribution, utilisation ou reproduction du courriel ou des renseignements qui s'y trouvent par une personne autre que son destinataire prévu est interdite. Je vous remercie de votre collaboration.

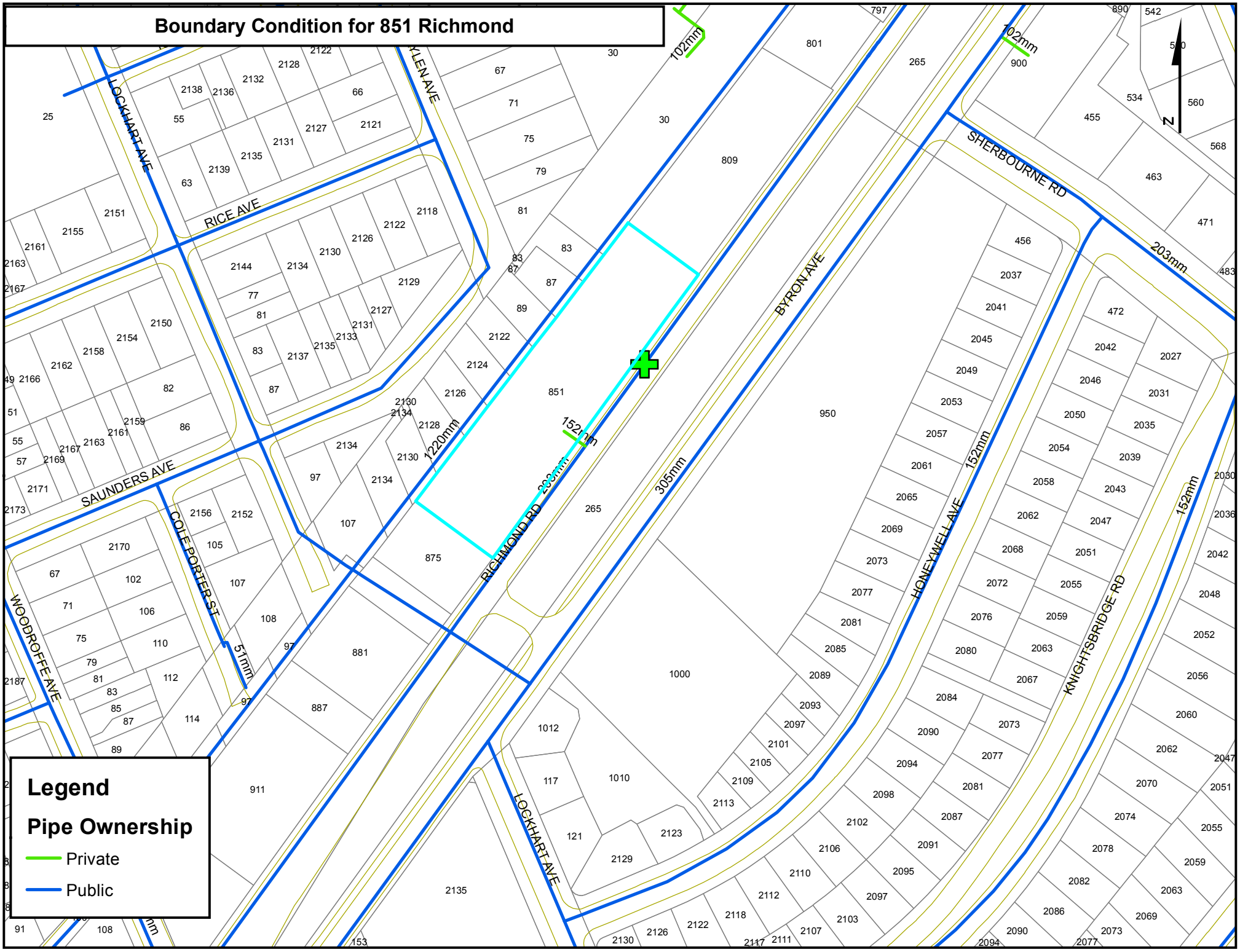
Boundary Condition for 851 Richmond
Legend
Pipe Ownership
Private
Public
RICHMOND RD
BYRON AVE
SHERBOURNE RD
HONEYWELL AVE
KNIGHTSBRIDGE RD
LOCKHART AVE
RICE AVE
SAUNDERS AVE
COLE PORTER ST
WOODROFFE AVE
851
809
950
265
875
881
887
911
1000
1010
1012
102mm
152mm
203mm
305mm
1220mm
51mm
N

APPLICATION FOR A FIRE ROUTE DESIGNATION

Property Location

851 RICHMOND ROAD OTTAWA

Municipal or Lot No. *Street* *City*

RESIDENTIAL *Occupancy*

Classification or Use of Building(s)

"851 INFILL"

Identifying Name of Building(s)/Condominium/Shopping Centre

Reason for Application

☐ Fire Chief's Orders ☑ Property Owner/Agent's request

Identification

Details	Applicant/Agent	Property Owner
Name		HOMESTEAD LAND HOLDINGS
Street		80 JOHNSON ST.
Apt. No.		
City	SAME	KINGSTON
Postal Code		K7L 1X7
Phone (Business)		613-546-0589
Fax		613-546-2969

All of the statements and representations contained in the attached documents filed in support of this application shall be deemed part of this application for all purposes. Fire route plan details must comply with the specific requirements of the Ontario Building Code and the Fire Route Plan Requirements document provided by the City of Ottawa.

Declaration

I, the undersigned ALBERTO MENENDEZ am the, ☑ property owner, ☑ authorized agent of the property named in the above application, and I certify the truth of all statements or representations contained herein. I, understand that the designation of the proposed fire route shall not be deemed a waiver of any of the provisions of any City of Ottawa by-law or Provincial legislation, notwithstanding including in or omitted from the plans or other material filed in support of or in connection with the above application.

Signature of Owner or Authorized Agent

Sworn before me in the City of Kingston in the Province of Ontario, this 4th day of January 20 18.

Kimberly Adams LSUC # P02827 *Notary Public/Commissioner for Oaths*

Office Use

Date Application Received: _____ dd/mm/yy

Plan circulated for internal comment: _____ dd/mm/yy Requested Return Date: _____ dd/mm/yy

By-law sent for approval: _____ dd/mm/yy Council approved date: _____ dd/mm/yy

By-law No.: _____ Applicant informed of fire route approval _____ dd/mm/yy

Stantec

FUS Fire Flow Calculation Sheet

Stantec Project #: 160401329
Project Name: FUS Protocol Test Drive
Date: 3/29/2018
Fire Flow Calculation #: 1
Description: 851 RICHMOND ROAD

Notes: Floor assemblies to be 2hr fire separations per OBC 3.2.2.42

Step	Task	Notes						Value Used	Req'd Fire Flow (L/min)
1	Determine Type of Construction	Non-Combustible Construction						0.8	-
2	Determine Ground Floor Area of One Unit	-						1134	-
	Determine Number of Adjoining Units	-						1	-
3	Determine Height in Storeys	Does not include floors >50% below grade or open attic space						1	-
4	Determine Required Fire Flow	($F = 220 \times C \times A^{1/2}$). Round to nearest 1000 L/min						-	6000
5	Determine Occupancy Charge	Limited Combustible						-15%	5100
6	Determine Sprinkler Reduction	Conforms to NFPA 13						-30%	-2040
		Standard Water Supply						-10%	
		Not Fully Supervised or N/A						0%	
		% Coverage of Sprinkler System						100%	
7	Determine Increase for Exposures (Max. 75%)	Direction	Exposure Distance (m)	Exposed Length (m)	Exposed Height (Stories)	Length-Height Factor (m x stories)	Construction of Adjacent Wall	-	-
		North	> 45	21.2	1	0-30	Wood Frame or Non-Combustible	0%	1785
		East	> 45	50.9	0	0-30	Wood Frame or Non-Combustible	0%	
		South	3.1 to 10	21.2	11	> 120	Wood Frame or Non-Combustible	20%	
		West	10.1 to 20	49.9	2	91-120	Wood Frame or Non-Combustible	15%	
8	Determine Final Required Fire Flow	Total Required Fire Flow in L/min, Rounded to Nearest 1000L/min							5000
		Total Required Fire Flow in L/s							83.3
		Required Duration of Fire Flow (hrs)							2.00
		Required Volume of Fire Flow (m^3)							600

From: Therkelsen, Jennifer
To: Alberto Menendez; Evans, Allan
Subject: RE: 851 Richmond Road - Response to First Round of Site Plan Comments
Date: Thursday, February 01, 2018 1:24:23 PM
Attachments: image002.png
image003.png

Good afternoon,

We are doing just fine ☺

There is nothing further required from you at this point just please let me know when you are close to completion of the project and we will finalize the process at that time.

Very Best,

Jennifer Therkelsen
Coordinator, By-law & Regulatory Services / Coordonnateur, Services des règlements municipaux
Tel / tél. : 613-580-2424, ext. / poste 23873

By-law email sig final3NEW2014 (3)

From: Alberto Menendez [mailto:AMenendez@homestead.ca]
Sent: Thursday, February 01, 2018 10:10 AM
To: Therkelsen, Jennifer <Jennifer.Therkelsen@ottawa.ca>; Evans, Allan <Allan.Evans@ottawa.ca>
Subject: RE: 851 Richmond Road - Response to First Round of Site Plan Comments

Good morning Jennifer,

How are we doing with this matter?

Alberto Menéndez, P.Eng. | Assistant VP Construction
Homestead Land Holdings Limited
Cell: (613) 217-9846

From: Alberto Menendez
Sent: January 29, 2018 2:20 PM
To: 'Therkelsen, Jennifer' <Jennifer.Therkelsen@ottawa.ca>; Evans, Allan <Allan.Evans@ottawa.ca>
Subject: RE: 851 Richmond Road - Response to First Round of Site Plan Comments

Hi…

Is the application you are referring to the one that was attached to the Site Plan Comments (see attached)?

Alberto Menéndez, P.Eng. | Assistant VP Construction
Homestead Land Holdings Limited
Cell: (613) 217-9846

From: Therkelsen, Jennifer [mailto:Jennifer.Therkelsen@ottawa.ca]
Sent: January 29, 2018 2:14 PM
To: Alberto Menendez <AMenendez@homestead.ca>; Evans, Allan <Allan.Evans@ottawa.ca>
Subject: RE: 851 Richmond Road - Response to First Round of Site Plan Comments

Hello,

Oh ok that Changes things a bit, we ask that you do put forth an application then we hold it on file until the construction is completed, when the final inspection is conducted we are notified that it is in compliance and then we proceed with finalizing the process.

Hope that helps,

Jennifer Therkelsen
Coordinator, By-law & Regulatory Services / Coordonnateur, Services des règlements municipaux
Tel / tél. : 613-580-2424, ext. / poste 23873

By-law email sig final3NEW2014 (3)

From: Alberto Menendez [mailto:AMenendez@homestead.ca]
Sent: Monday, January 29, 2018 1:57 PM
To: Therkelsen, Jennifer <Jennifer.Therkelsen@ottawa.ca>; Evans, Allan <Allan.Evans@ottawa.ca>
Subject: RE: 851 Richmond Road - Response to First Round of Site Plan Comments

Hi Jennifer,

Thank you for your email.

This entire process was started by our request to obtain site plan approval for this particular site. The project has not yet started as we are still in the site plan stage. The Site Plan Comments (attached) received under item #6 - Engineering/General requested the following (the highlighted yellow section has been added):

Please complete the attached Fire Route Form and send to Jennifer.Therkelsen@ottawa.ca after the fire route has been confirmed by Allan.Evans@ottawa.ca in order to add the fire route to the By-law. Please cc myself and the file lead as confirm that the form has been submitted.

The question was initially directed at Allan (as you are aware) who directed it to you. I am still confused as to what exactly needs to be done at this stage of the process and I am hoping that either you or Allan can clarify this for me please.

Thank you once again.

Alberto Menéndez, P.Eng. | Assistant VP Construction
Homestead Land Holdings Limited
Cell: (613) 217-9846

From: Therkelsen, Jennifer [mailto:Jennifer.Therkelsen@ottawa.ca]
Sent: January 29, 2018 1:23 PM
To: Alberto Menendez <AMenendez@homestead.ca>; Evans, Allan <Allan.Evans@ottawa.ca>
Subject: RE: 851 Richmond Road - Response to First Round of Site Plan Comments

Good afternoon,

Apologies for the delay, the process is still the same, I have received your application thank you. One question for you now are the signs erected?

I have attached for your information the By-law and in Schedule B it specifies what they are to look like (bilingual is a key) and other provisions, once they are erected By-law & Regulatory Services attends the site for another inspection, then we send the information to our other City Partners for final approval.

Thank you,
Jenn

Jennifer Therkelsen
Coordinator, By-law & Regulatory Services / Coordonnateur, Services des règlements municipaux
Tel / tél. : 613-580-2424, ext. / poste 23873



From: Alberto Menendez [mailto:AMenendez@homestead.ca]
Sent: Friday, January 26, 2018 3:16 PM
To: Evans, Allan <Allan.Evans@ottawa.ca>
Cc: Therkelsen, Jennifer <Jennifer.Therkelsen@ottawa.ca>
Subject: RE: 851 Richmond Road - Response to First Round of Site Plan Comments

Hello Allan / Jennifer,

Any news on the email below?

Thanks.

Alberto Menéndez, P.Eng. | Assistant VP Construction
Homestead Land Holdings Limited
Cell: (613) 217-9846

From: Evans, Allan [mailto:Allan.Evans@ottawa.ca]
Sent: January 18, 2018 4:15 PM
To: Alberto Menendez <AMenendez@homestead.ca>
Cc: Therkelsen, Jennifer <Jennifer.Therkelsen@ottawa.ca>
Subject: RE: 851 Richmond Road - Response to First Round of Site Plan Comments

Aha – okay. So I think this is part of the new process Jenn worked out in regards to fire routes registration – this is my first one so I'm uncertain how to proceed.

Jenn – do I have to wait for the final submission to approve, or do I just look at the site plans, or is it automatic approval unless I say otherwise?

A

Regards,

Allan Evans
Fire Protection Engineer
Ottawa Fire Service
1445 Carling Avenue
Ottawa, ON, K1Z 7L9

Follow me on Twitter: @FFSnack
☎ (613) 913-2747

Did you know? That as of October 15th, 2015, all residential occupancies that contain at least one fuel-burning appliance (e.g., gas water heater or gas furnace), fireplace or an attached garage require the installation of a CO alarm outside all sleeping areas.

Learn More at: http://www.mcscs.jus.gov.on.ca/english/FireMarshal/CarbonMonoxideAlarms/QuestionsandAnswers/OFM_COAlarms_QandA.html

cid:image002.jpg@01CD27B1.5A4A8420

From: Alberto Menendez [mailto:AMenendez@homestead.ca]
Sent: Thursday, January 18, 2018 4:00 PM
To: Evans, Allan <Allan.Evans@ottawa.ca>
Subject: RE: 851 Richmond Road - Response to First Round of Site Plan Comments

It is a new build and the site plan was filed with the City (1st submission). The 2nd submission will occur during the month of February.

Alberto Menéndez, P.Eng. | Assistant VP Construction
Homestead Land Holdings Limited
Cell: (613) 217-9846

From: Evans, Allan [mailto:Allan.Evans@ottawa.ca]
Sent: January 18, 2018 3:49 PM
To: Alberto Menendez <AMenendez@homestead.ca>
Subject: RE: 851 Richmond Road - Response to First Round of Site Plan Comments

There is supposed to be a site plan with the fire route signage and where the actual fire route is I believe. That's the one I care about. Is this a new build? So site plan filed with city, etc?

Regards,

Allan Evans
Fire Protection Engineer
Ottawa Fire Service
1445 Carling Avenue
Ottawa, ON, K1Z 7L9

Follow me on Twitter: @FFSnack
☎ (613) 913-2747

Did you know? That as of October 15th, 2015, all residential occupancies that contain at least one fuel-burning appliance (e.g., gas water heater or gas furnace), fireplace or an attached garage require the installation of a CO alarm outside all sleeping areas.

Learn More at: http://www.mcscs.jus.gov.on.ca/english/FireMarshal/CarbonMonoxideAlarms/QuestionsandAnswers/OFM_COAlarms_QandA.html

cid:image002.jpg@01CD27B1.5A4A8420

From: Alberto Menendez [mailto:AMenendez@homestead.ca]
Sent: Thursday, January 18, 2018 11:18 AM
To: Evans, Allan <Allan.Evans@ottawa.ca>
Cc: Therkelsen, Jennifer <Jennifer.Therkelsen@ottawa.ca>
Subject: RE: 851 Richmond Road - Response to First Round of Site Plan Comments

Hi Allan,

Attached if it helps is the Fire route Designation Application we were asked to provide.

Please advise.

Thanks.

Alberto Menéndez, P.Eng. | Assistant VP Construction
Homestead Land Holdings Limited
Cell: (613) 217-9846

From: Evans, Allan [mailto:Allan.Evans@ottawa.ca]
Sent: January 18, 2018 9:19 AM
To: Alberto Menendez <AMenendez@homestead.ca>

Cc: Therkelsen, Jennifer <Jennifer.Therkelsen@ottawa.ca>
Subject: RE: 851 Richmond Road - Response to First Round of Site Plan Comments

I'm not sure to be honest. This process has been evolving over the past year so maybe things have changed. Previously, a fire route would be submitted to Jennifer and she would check it out (actually go to location) and then forward to me for review. Maybe now you are supposed to send me the sheet first?

Jenn?

Regards,

Allan Evans
Fire Protection Engineer
Ottawa Fire Service
1445 Carling Avenue
Ottawa, ON, K1Z 7L9

Follow me on Twitter: @FFSnack
☎ (613) 913-2747

Did you know? That as of October 15th, 2015, all residential occupancies that contain at least one fuel-burning appliance (e.g., gas water heater or gas furnace), fireplace or an attached garage require the installation of a CO alarm outside all sleeping areas.

Learn More at:
http://www.mcscs.jus.gov.on.ca/english/FireMarshal/CarbonMonoxideAlarms/QuestionsandAnswers/OFM_COAlarms_QandA.html

cid:image002.jpg@01CD27B1.5A4A8420

From: Alberto Menendez [mailto:AMenendez@homestead.ca]
Sent: Monday, January 08, 2018 10:14 AM
To: Evans, Allan <Allan.Evans@ottawa.ca>
Subject: RE: 851 Richmond Road - Response to First Round of Site Plan Comments

The attachment is simply the Application For A Fire Route Designation it references in the comment sent which application appears on the last page of the comments provided by the City (see attached).

Alberto Menéndez, P.Eng. | Assistant VP Construction
Homestead Land Holdings Limited
Cell: (613) 217-9846

From: Evans, Allan [mailto:Allan.Evans@ottawa.ca]
Sent: January 8, 2018 10:00 AM
To: Alberto Menendez <AMenendez@homestead.ca>
Subject: RE: 851 Richmond Road - Response to First Round of Site Plan Comments

No attachment ☺

Regards,

Allan Evans
Fire Protection Engineer
Ottawa Fire Service
1445 Carling Avenue
Ottawa, ON, K1Z 7L9

Follow me on Twitter: @FFSnack
☎ (613) 913-2747

Did you know? That as of October 15th, 2015, all residential occupancies that contain at least one fuel-burning appliance (e.g., gas water heater or gas furnace), fireplace or an attached garage require the installation of a CO alarm outside all sleeping areas.

Learn More at:
http://www.mcscs.jus.gov.on.ca/english/FireMarshal/CarbonMonoxideAlarms/QuestionsandAnswers/OFM_COAlarms_QandA.html

cid:image002.jpg@01CD27B1.5A4A8420

From: Alberto Menendez [mailto:AMenendez@homestead.ca]
Sent: Monday, January 08, 2018 9:59 AM
To: Evans, Allan <Allan.Evans@ottawa.ca>
Subject: 851 Richmond Road - Response to First Round of Site Plan Comments

Good morning Allan,

One of the notes referenced in the above subject line under item #6 of the Engineering/General comments is shown below (the highlighted yellow section has been added):

Please complete the attached Fire Route Form and send to Jennifer.Therkelsen@ottawa.ca after the fire route has been confirmed by Allan.Evans@ottawa.ca in order to add the fire route to the By-law. Please cc myself and the file lead as confirm that the form has been submitted.

I am not certain what is actually required by you to confirm the fire route as noted. Would you please elaborate?

Thank you in advance.

Homestead.ca

Alberto Menéndez, P. Eng. | Assistant Vice President of Construction
Homestead Land Holdings Limited
80 Johnson Street, Kingston, ON, K7L 1X7
p: 613.546.3146 | f: 613.546.5637

Join our team! Visit homestead.ca/careers and start your new career!

This e-mail originates from the City of Ottawa e-mail system. Any distribution, use or copying of this e-mail or the information it contains by other than the intended recipient(s) is unauthorized. Thank you.

Le présent courriel a été expédié par le système de courriels de la Ville d'Ottawa. Toute distribution, utilisation ou reproduction du courriel ou des renseignements qui s'y trouvent par une personne autre que son destinataire prévu est interdite. Je vous remercie de votre collaboration.

Appendix B PROPOSED SITE PLAN

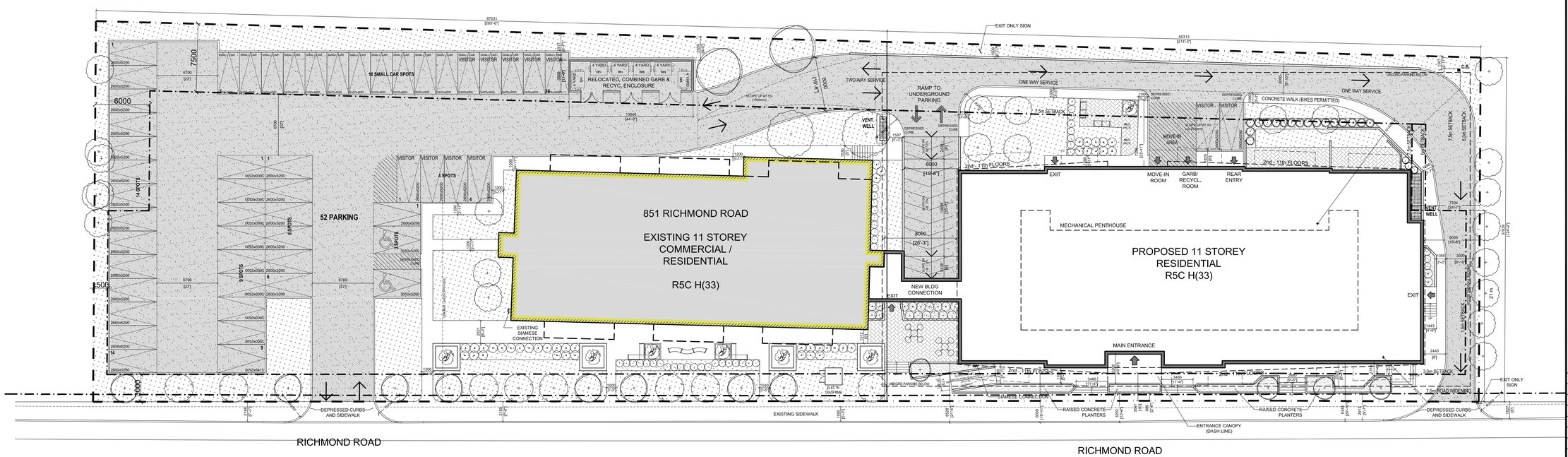

0m 5 10 20

SCALE 1: 200

1 A01 SITE PLAN

SCALE = 1 : 200

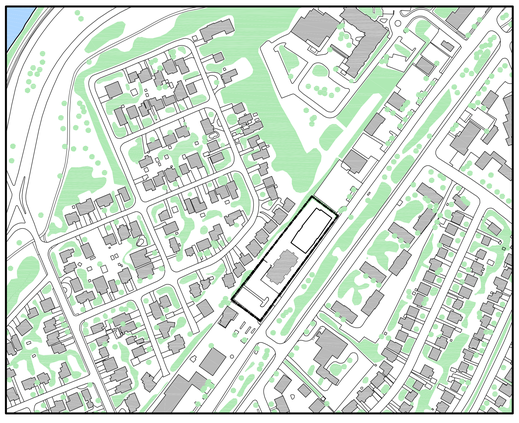

2 A01 KEY PLAN

SCALE = 1 : 3000

LEGEND

- CONCRETE UNIT PAVERS SURFACE
- ASPHALT PAVING
- CONCRETE SIDEWALK
- SOFT LANDSCAPING
- TWO WAY VEHICLE CIRCULATION
- MAIN ENTRANCE
- ENTRANCE AND/OR FIRE EXIT
- BOLLARD STYLE BIKE RACK
- PROPERTY LINE
- ZONING SETBACKS

PROJECT INFORMATION

ZONING	R5C H(33)
FULL SITE AREA	6,060 sq. m. (65,233) sq. ft.
FULL SITE OPEN AREA 33.9%	2,054 sq. m. (22,106) sq. ft.
NEW BLDG SITE AREA	2,537 sq. m. (27,316) sq. ft.
NEW BLDG OPEN AREA 34.1%	865 sq. m. (9,315) sq. ft.
BUILDING HEIGHT	33.0 m
RICHMOND ROAD SETBACK	3.0 m
REAR YARD SETBACK	7.5 m
INTERIOR YARD SETBACK	1.5 m

PROJECT STATISTICS

BUILDING HEIGHT		33.0 m
AVERAGE MEAN GRADE	(GEOD. ELEV.)	XX.XX

GROSS BUILDING - AREAS
(CITY OF OTTAWA'S ZONING DEFINITION)

PARKING LEVEL (TYPICAL)		2,200 sq. m. (23,688) sq. ft.
GROUND FLOOR		1,095 sq. m. (11,788) sq. ft.
TYP. RESID. FLOORS 2nd -11th FLOOR	10 x 1,138 sq. m. 10 x (12,257) sq. ft.	11,380 sq. m. (122, 570) sq. ft.
AMENITY/ MECH FLOOR		N/A
TOTAL AREA (ABOVE GRADE)		12,475 sq. m. (134,279) sq. ft.

UNIT STATISTICS

STUDIO - GUEST SUITE	1
1 BEDROOM - DWELLING UNIT	50
2 BEDROOM - DWELLING UNIT	72
TOTAL	123

AMENITY AREAS
(CITY OF OTTAWA'S ZONING DEFINITION)

REQUIRED	
6.0m2/DWELLING UNIT	732 sq. m. (7,879) sq. ft.
PROVIDED	
EXTERNAL AT GRADE	920 sq. m. (9,905) sq. ft.
GROUND FLOOR AMENITY	249 sq. m. (2,675) sq. ft.
BALCONIES 2nd -11th FLOOR	894 sq. m. (9, 627) sq. ft.
TOTAL AMENITY	2,063 sq. m. (22,207) sq. ft.

CAR PARKING

REQUIRED

RESIDENCE	0.5 PER UNIT (12 EXEMPT)	55
VISITOR	0.1 PER UNIT (12 EXEMPT)	11
ACCESSIBLE		2
TOTAL		68

PROVIDED

RESIDENCE	160
VISITOR	11
ACCESSIBLE	4
TOTAL	175

LOCATION OF PARKING

PROPOSED BUILDING P1 LEVEL	58
PROPOSED BUILDING P2 LEVEL	63
PROPOSED BUILDING EXTERIOR AT GRADE	54
TOTAL	175

BICYCLE PARKING

REQUIRED

RESIDENCE	- 0.5 PER UNIT (122 UNITS)	61

PROVIDED

UNDERGROUND	76
EXTERIOR AT GRADE	0
TOTAL	76

STORAGE UNITS

PROVIDED

GROUND FLOOR	73
TOTAL	73

CLIENT
Homestead Land Holdings Ltd.
80 Johnson Street
Kingston, ON, K7L 1X7
Tel: (613) 546-3146
Fax: (613) 546-5637

ARCHITECT
Roderick Lahey Architect Inc.
56 Beech Street
Ottawa, ON Canada, K1S 3J6
Tel: (613) 724-9932
Fax: (613) 724-1209

URBAN PLANNER
FoTenn Consultants Inc.
223 Mcleod Street
Ottawa, ON Canada, K2P 0Z8
Tel: (613) 730-5709
Fax: (613) 730-1136

SURVEYOR
Annis O'Sullivan Vollebekk Ltd.
Ontario Land Surveyors
14 Concourse Gate, Suite 500
Nepean, ON Canada, K2E 7S6
Tel: (613) 727-0850 Fax: (613) 727-1079

CIVIL
Stantec Consulting Ltd.
400-1331 Clyde Avenue
Ottawa, ON Canada
Tel: (613) 722-4420

LANDSCAPE ARCHITECT
Wentworth Landscapes
13392 Loyalist Parkway R.R.1
Picton, ON Canada, K0K 2T0
Tel: (613) 547 3772

STRUCTURE
Goodeve Structural Inc.
77 Auriga Drive, Suite 18
Ottawa, ON Canada, K2E 7Z7
Tel: (613) 226-4558

IT IS THE RESPONSIBILITY OF THE APPROPRIATE CONTRACTOR TO CHECK AND VERIFY ALL DIMENSIONS ON SITE AND TO REPORT ALL ERRORS AND/OR OMISSIONS TO THE ARCHITECT.

ALL CONTRACTORS MUST COMPLY WITH ALL PERTINENT CODES AND BY-LAWS.

THIS DRAWING MAY NOT BE USED FOR CONSTRUCTION UNTIL SIGNED BY THE ARCHITECT.

DO NOT SCALE DRAWINGS.

COPYRIGHT RESERVED.

No.	DESCRIPTION	DATE
8		
7		
6		
5	RESUBMISSION FOR SITE PLAN APPROVAL	Aug 13, 18
4	ISSUED FOR COORDINATION	July 17, 18
3	ISSUED FOR COORDINATION	July 17, 18
2	ISSUED FOR FOUNDATION PERMIT	JULY 12, 18
1	RESUBMISSION FOR SITE PLAN APPROVAL	Mar 29, 18

REVISIONS:

ARCHITECT SEAL: ONTARIO ASSOCIATION OF ARCHITECTS — RODERICK J. LAHEY — LICENCE 4375

NORTH ARROW:

CLIENT: HOMESTEAD

ARCHITECT: rla / architecture — roderick lahey architect inc.

PROJECT TITLE:
851 RICHMOND ROAD
OTTAWA ONTARIO

PROJECT No.: 1724
DRAWN: P.E.
CHECKED: K.R.
SCALE: 1:1

SHEET TITLE:
SITE PLAN

SHEET No.
A-SP

PAGE NUMBER: 0 OF 0

PLOT DATE: Monday, August 13, 2018 8:57:51 AM PLOTTED BY: Kris Rothwell
PAPER SIZE: ISO_B1_707.00_x_1000.00_MM PEN STYLE TABLE: ARCH full.ctb
PAPER SIZE: User 12 PLOT SCALE: 1:25.4

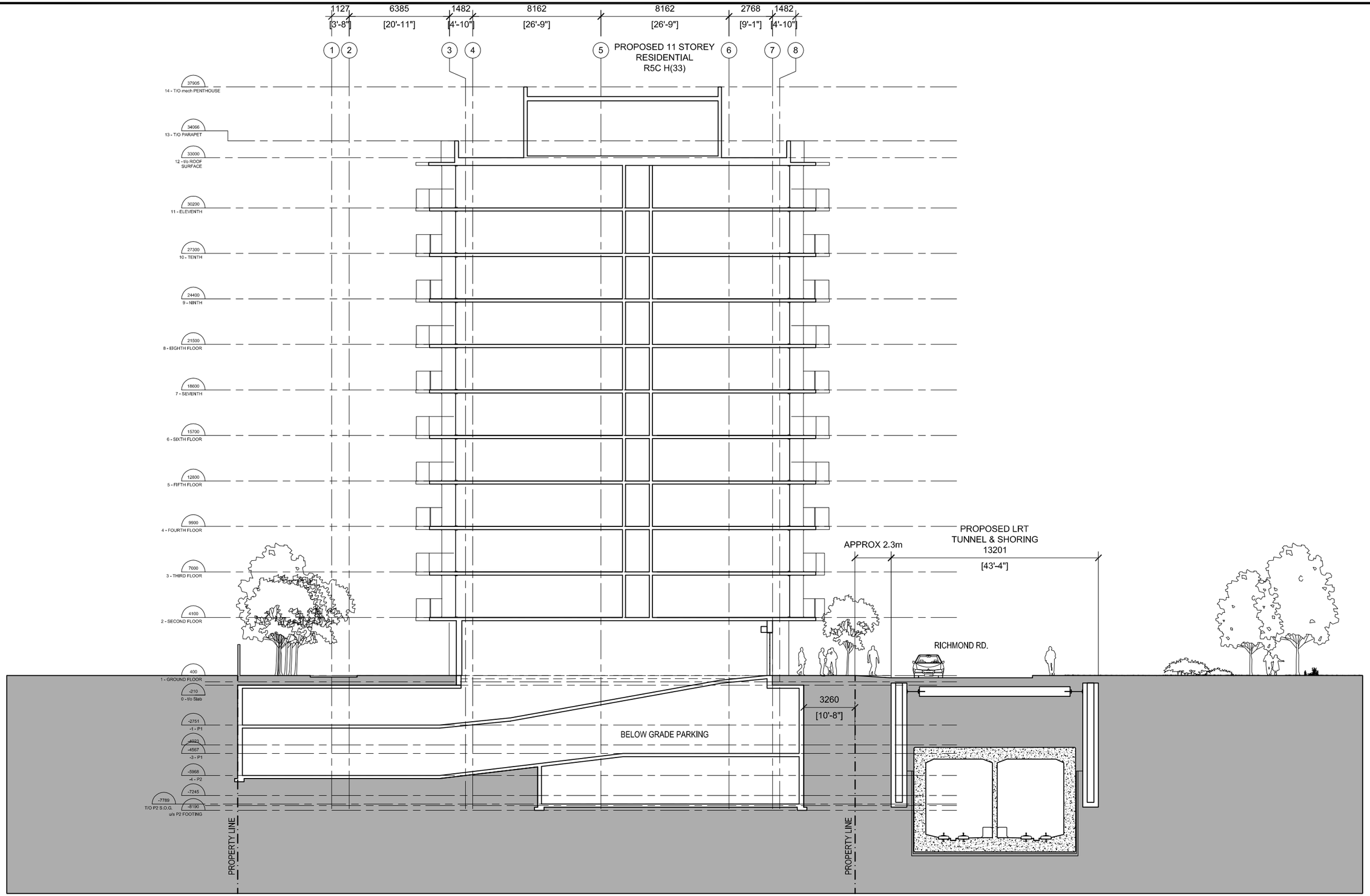

RODERICKLAHEY ARCHITECT INC

TRANSVERSE BUILDING SECTION & LRT

SCALE TO FIT date:August 11, 2017

851 RICHMOND ROAD
OTTAWA ONTARIO

SHEET #
a300
PROJ. # 1705

Appendix C SANITARY SEWER CALCULATIONS

Stantec

SUBDIVISION:

851 RICHMOND ROAD

DATE: 2018/03/29
REVISION: 1
DESIGNED BY: WAJ
CHECKED BY: AMP

SANITARY SEWER DESIGN SHEET
(City of Ottawa)

FILE NUMBER: 160401329

DESIGN PARAMETERS

MAX PEAK FACTOR (RES.)=	4.0	AVG. DAILY FLOW / PERSON	280 l/p/day	MINIMUM VELOCITY	0.60 m/s
MIN PEAK FACTOR (RES.)=	2.0	COMMERCIAL	28,000 l/ha/day	MAXIMUM VELOCITY	3.00 m/s
PEAKING FACTOR (INDUSTRIAL):	2.4	INDUSTRIAL (HEAVY)	55,000 l/ha/day	MANNINGS n	0.013
PEAKING FACTOR (COMM., INST.):	1.5	INDUSTRIAL (LIGHT)	35,000 l/ha/day	BEDDING CLASS	B
PERSONS / SINGLE	3.4	INSTITUTIONAL	28,000 l/ha/day	MINIMUM COVER	2.50 m
PERSONS / 1 BED APT	1.4	INFILTRATION	0.33 l/s/Ha		
PERSONS / 2 BED APT	2.1				

LOCATION			RESIDENTIAL AREA AND POPULATION									COMMERCIAL		INDUSTRIAL (L)		INDUSTRIAL (H)		INSTITUTIONAL		GREEN / UNUSED		C+I+I	INFILTRATION			TOTAL	PIPE								
AREA ID NUMBER	FROM M.H.	TO M.H.	AREA	UNITS SINGLE	1 BED APT	2 BED APT	POP.	CUMULATIVE AREA	CUMULATIVE POP.	PEAK FACT.	PEAK FLOW	AREA	ACCU. AREA	AREA	ACCU. AREA	AREA	ACCU. AREA	AREA	ACCU. AREA	AREA	ACCU. AREA	PEAK FLOW	TOTAL AREA	ACCU. AREA	INFILT. FLOW	FLOW	LENGTH	DIA	MATERIAL	CLASS	SLOPE	CAP. (FULL)	CAP. V PEAK FLOW	VEL. (FULL)	VEL. (ACT.)
			(ha)					(ha)			(l/s)	(ha)	(ha)	(ha)	(ha)	(ha)	(ha)	(ha)	(ha)	(ha)	(ha)	(l/s)	(ha)	(ha)	(l/s)	(l/s)	(m)	(mm)			(%)	(l/s)	(%)	(m/s)	(m/s)
BLDG	STUB	1	0.25	0	50	72	221	0.25	221	4.00	2.87	0.00	0.00	0.00	0.00	0.00	0.00	0.00	0.00	0.00	0.00	0.0	0.25	0.25	0.08	2.95	3.5	200	PVC	SDR 35	2.00	47.3	**6.24%**	1.49	0.70
																												200							

david schaeffer engineering ltd

120 Iber Road, Suite 103
Ottawa, Ontario K2S 1E9
Tel. (613)836-0856
Fax (613) 836-7183
www.DSEL.ca

ASSESSMENT OF ADEQUACY OF PUBLIC SERVICES

FOR

OCEF CORP
809 RICHMOND ROAD

CITY OF OTTAWA

PROJECT NO.: 16-850

DECEMBER 2016 – REV 2

© DSEL

APPENDIX C

Wastewater Collection

Wastewater Design Flows per Unit Count
City of Ottawa Sewer Design Guidelines, 2004

Site Area 0.360 **ha**

Extraneous Flow Allowances

Infiltration / Inflow	**0.10**	**L/s**

Domestic Contributions

Unit Type	Unit Rate	Units	Pop
Single Family	3.4		0
Semi-detached and duplex	2.7		0
Townhouse	2.7		0
Stacked Townhouse	2.3		0
Apartment			
Bachelor	1.4		0
1 Bedroom	1.4	120	168
2 Bedroom	2.1	117	246
3 Bedroom	3.1		0
Average	1.8		0

Total Pop	**414**	
Average Domestic Flow	**1.68**	**L/s**
Peaking Factor	**4.00**	
Peak Domestic Flow	**6.71**	**L/s**

Institutional / Commercial / Industrial Contributions

Property Type	Unit Rate		No. of Units	Avg Wastewater (L/s)
Commercial floor space*	5	$L/m^2/d$	860	0.10
Hospitals	900	L/bed/d		0.00
School	70	L/student/d		0.00
Industrial - Light**	35,000	L/gross ha/d		0.00
Industrial - Heavy**	55,000	L/gross ha/d		0.00

Average I/C/I Flow	**0.10**
Peak Institutional / Commercial Flow	0.15
Peak Industrial Flow**	0.00
Peak I/C/I Flow	**0.15**

** assuming a 12 hour commercial operation*

*** peak industrial flow per City of Ottawa Sewer Design Guidelines Appendix 4B*

Total Estimated Average Dry Weather Flow Rate	**1.78 L/s**
Total Estimated Peak Dry Weather Flow Rate	**6.86 L/s**
Total Estimated Peak Wet Weather Flow Rate	**6.96 L/s**

OCEF Corp
809 Richmond Road
Proposed Development

PROJECT:
LOCATION: **809 Richmond Road**
FILE REF: **16-850**
DATE: **18-Mar-16**

DESIGN PARAMETERS

Avg. Daily Flow Res.	350	L/p/d	Peak Fact Res. Per Harmons: Min = 2.0, Max =4.0		Infiltration / Inflow	0.28	L/s/ha
Avg. Daily Flow Comm	50,000	L/ha/d	Peak Fact. Comm.	1.5	Min. Pipe Velocity	0.60	m/s full flowing
Avg. Daily Flow Instit.	50,000	L/ha/d	Peak Fact. Instit.	1.5	Max. Pipe Velocity	3.00	m/s full flowing
Avg. Daily Flow Indust	35,000	L/ha/d	Peak Fact. Indust. per MOE graph		Mannings N	0.013	

Location			Residential Area and Population									Commercial		Institutional		Industrial			Infiltration				Pipe Data							
Area ID	Up	Down	Area	Number of Units				Pop.	Cumulative		Peak.	Q_{res}	Area	Accu.	Area	Accu.	Area	Accu.	Q_{C+I+I}	Total	Accu.	Infiltration	Total	DIA	Slope	Length	$A_{hydraulic}$	R	Velocity	Q_{cap}	Q / Q full
				by type					Area	Pop.	Fact.			Area		Area		Area		Area	Area	Flow	Flow								
			(ha)	Singles	Semi's	Town's	Apt's		(ha)		(-)	(L/s)	(ha)	(ha)	(ha)	(ha)	(ha)	(ha)	(L/s)	(ha)	(ha)	(L/s)	(L/s)	(mm)	(%)	(m)	(m^2)	(m)	(m/s)	(L/s)	(-)
A	UPSTREAM	N1	0.470	2				7.0	0.470	7.0	4.00	0.11	1.29	1.29		0.00		0.00	1.1	1.760	1.760	0.493	1.73	225	0.90	395.0	0.040	0.056	1.07	42.6	0.04
B	N1	N2	0.000				199	358.0	0.470	365.0	4.00	5.91	1.24	2.53		0.00		0.00	2.2	1.240	3.000	0.840	8.95	225	0.90	208.0	0.040	0.056	1.07	42.6	0.21
C	N2	N3	0.160					0.0	0.630	365.0	4.00	5.91	0.18	2.71		0.00		0.00	2.4	0.340	3.340	0.935	9.20	225	4.80	30.0	0.040	0.056	2.47	98.4	0.09

DSEL©

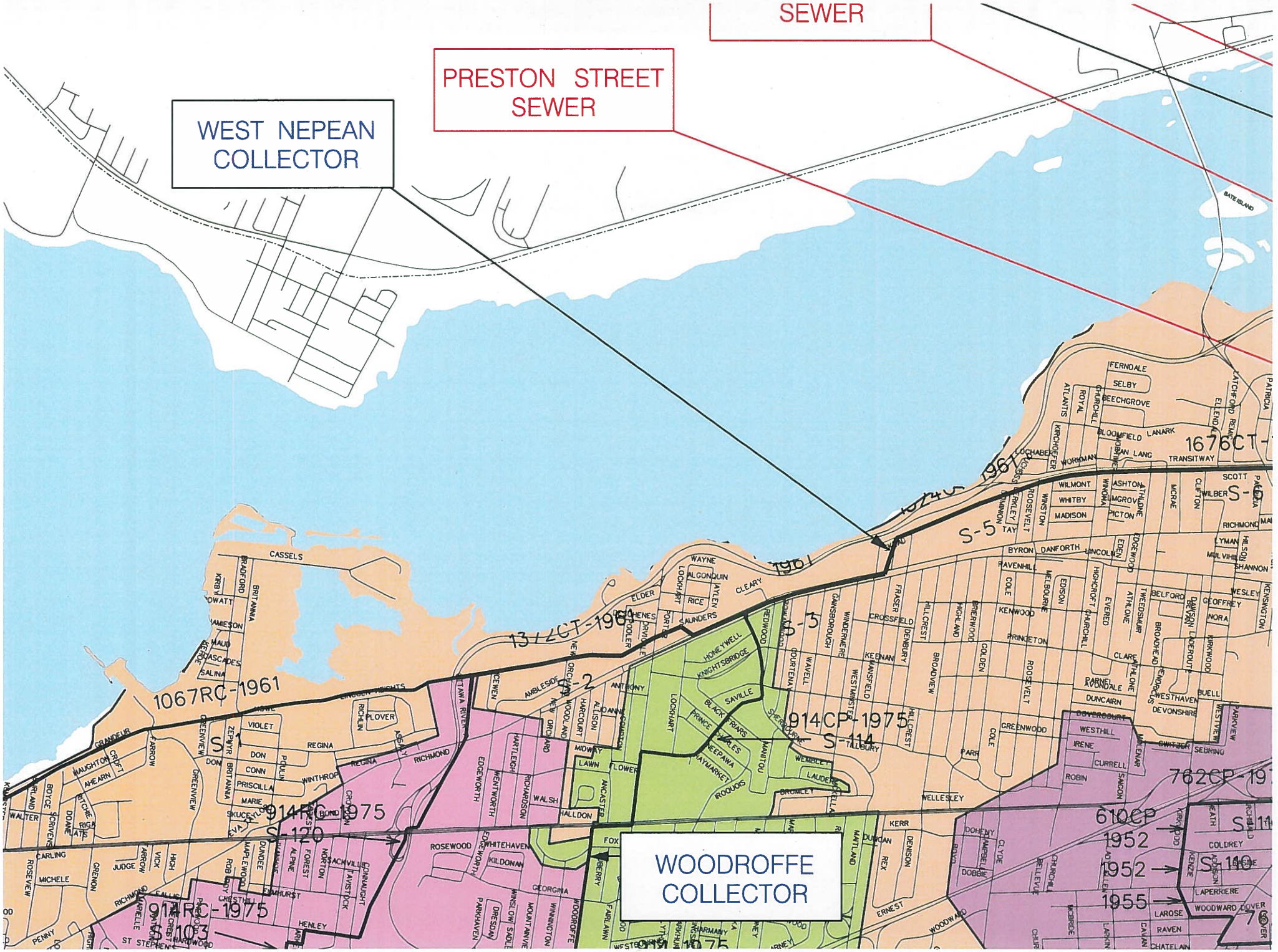
SEWER
PRESTON STREET SEWER
WEST NEPEAN COLLECTOR
WOODROFFE COLLECTOR
1676CT-
1372CT-1961
1067RC-1961
914RC-1975
S-120
914RC-1975
S-103
914CP-1975
S-114
762CP-19
610CP
1952
1952
1955
S-1
S-2
S-3
S-5
S-7
S-10
S-11
CASSELS
WAYNE
ELDER
CLEARY
FERNDALE
SELBY
BEECHGROVE
BLOOMFIELD
LANARK
TRANSITWAY
SCOTT
WILMONT
WHITBY
MADISON
ASHTON
MGROVE
PICTON
RICHMOND
BYRON
DANFORTH
LINCOLN
RAVENHILL
KENWOOD
PRINCETON
DUNCAIRN
DOVERCOURT
WESTHILL
GREENWOOD
CROSSFIELD
DENBURY
HILLCREST
BROADVIEW
GOLDEN
ROOSEVELT
MELBOURNE
EDISON
HIGHCROFT
EVERED
TWEEDSMUIR
ATHLONE
BELFORD
BROADHEAD
WESTHAVEN
DEVONSHIRE
BUELL
WESTVIEW
PARKVIEW
SEBRING
CURRELL
IRENE
ROBIN
SAGON
KERR
DENISON
REX
DURHAM
MAITLAND
WELLESLEY
LAUDER
BROMLEY
WEMBLEY
SHERBOURNE
SAVILLE
KNIGHTSBRIDGE
HONEYWELL
ANTHONY
ALLISON
HARCOURT
WOODLAND
ORCHARD
AMBLESIDE
MIDWAY
LAWN
FLOWER
ANCASTER
HALLDON
FOX
BERRY
FARLAWN
WOODROFFE
ROSEWOOD
WHITEHAVEN
KILDONAN
GEORGINA
PARKHAVEN
DRESDEN
WINNINGTON
MOUNTAINVIEW
WINSLOW
SADLER
EDGEWORTH
WENTWORTH
HARTLEIGH
RICHARDSON
WALSH
RICHMOND
REGINA
VIOLET
ZEPHYR
DON
CONN
PRISCILLA
MARIE
SKUCE
BRITANNIA
PLOVER
RICHLIN
ASHLEY
GRANDEUR
CROFT
HAUGHTON
AHEARN
WALTER
BOYCE
SCRIVENS
CARLING
ROSEVIEW
MICHELE
GRENON
JUDGE
ARROW
VICK
HIGH
RICHMOND
ROBERTSON
CRESTHILL
MAPLEWOOD
DUNDEE
ALPINE
FOREST
NORTON
HAVILLAND
HAVISTOCK
CONNAUGHT
HENLEY
ST STEPHEN
PENNY
DOHENY
CAMPBELL
DOBBIE
CLYDE
BELLEVUE
CHURCHILL
MCBRIDE
ERNEST
WOODWARD
COLDREY
KEENE
LAPERRIERE
WOODWARD COVER
LAROSE
RAVEN
CHATELAIN
CAVAN
LARKIN
LATCHFORD
PATRICIA
ELLENDALE
BATE ISLAND

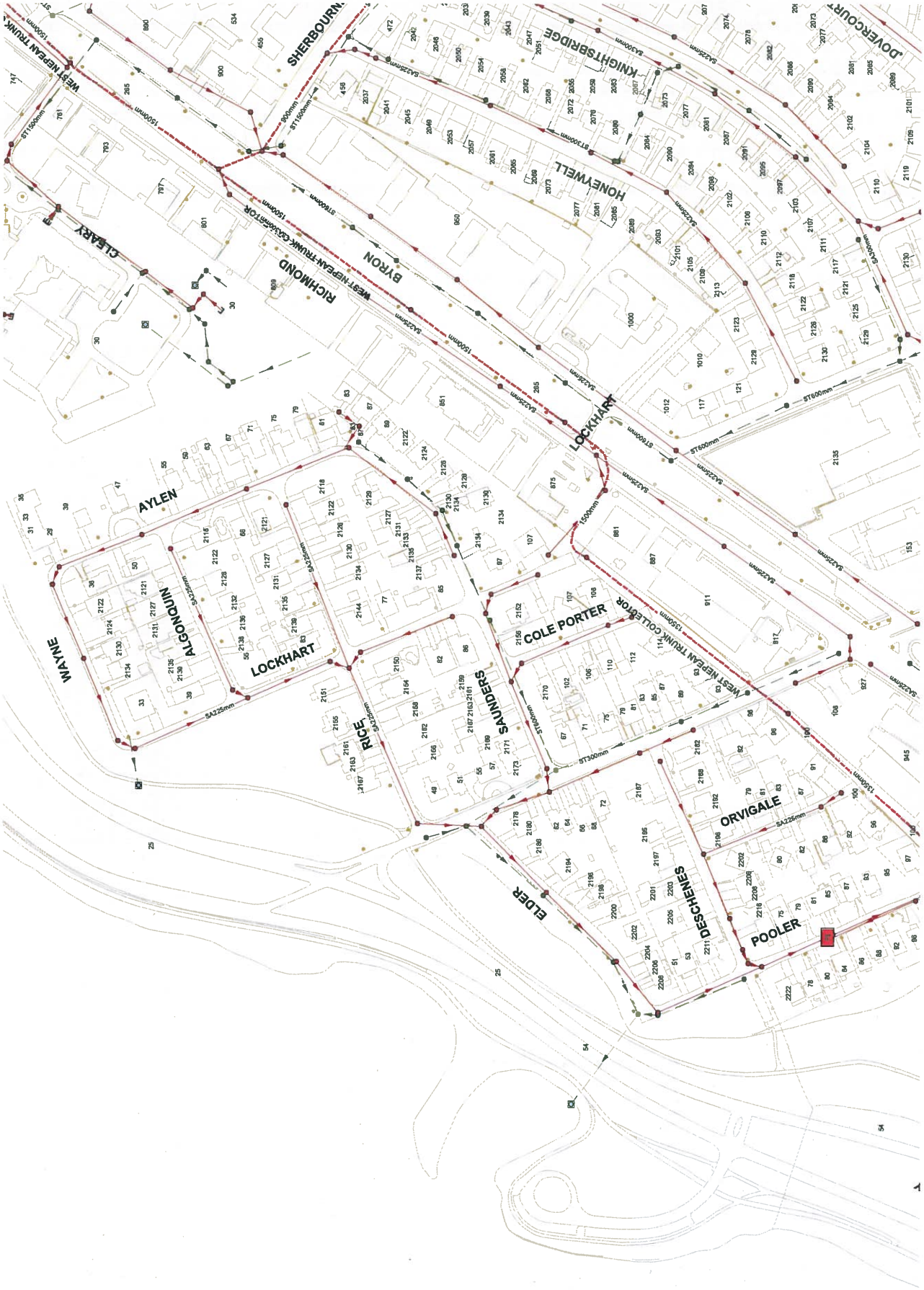
SHERBOURN
KNIGHTSBRIDGE
DOVERCOURT
HONEYWELL
WEST NEPEAN TRUNK
CLEARY
RICHMOND
BYRON
LOCKHART
AYLEN
ALGONQUIN
WAYNE
LOCKHART
RICE
SAUNDERS
COLE PORTER
WEST NEPEAN TRUNK COLLECTOR
ORVIGALE
ELDER
DESCHENES
POOLER

809 Richmond Road - Sanitary Analysis

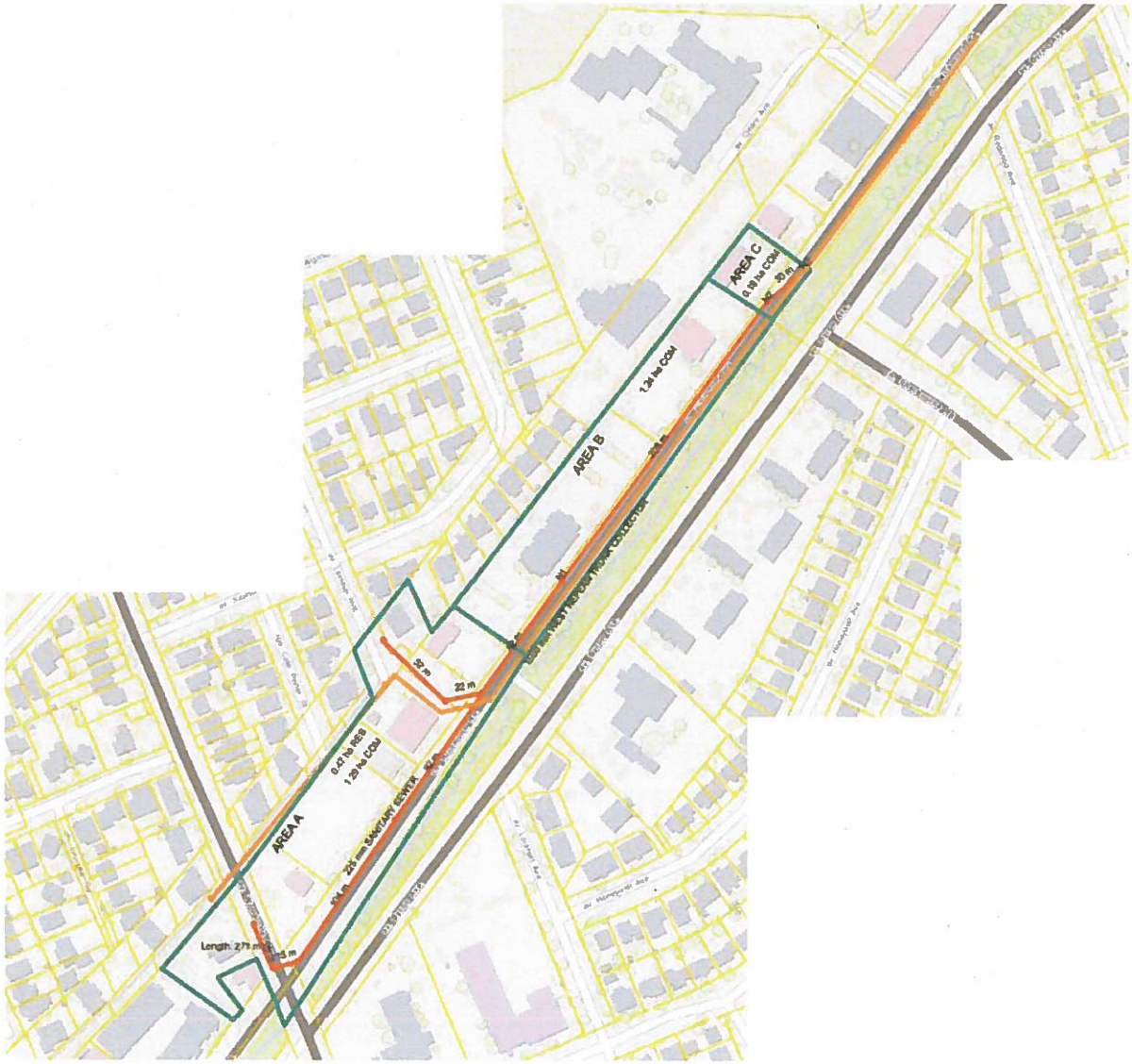

Appendix D STORMWATER MANAGEMENT CALCULATIONS

Stantec

851 RICHMOND ROAD

DATE: 2018/06/29
REVISION: 3
DESIGNED BY: WAJ
CHECKED BY: NPC

STORM SEWER DESIGN SHEET
(City of Ottawa)

FILE NUMBER: 160401329

DESIGN PARAMETERS

$I = a / (t+b)^c$ (As per City of Ottawa Guidelines, 2012)

	1:2 yr	1:5 yr	1:10 yr	1:100 yr
a =	732.951	998.071	1174.184	1735.688
b =	6.199	6.053	6.014	6.014
c =	0.810	0.814	0.816	0.820

MANNING'S n = 0.013
MINIMUM COVER: 2.00 m
TIME OF ENTRY 10 min
BEDDING CLASS B

LOCATION			DRAINAGE AREA																				PIPE SELECTION												
AREA ID NUMBER	FROM M.H.	TO M.H.	AREA (2-YEAR) (ha)	AREA (5-YEAR) (ha)	AREA (10-YEAR) (ha)	AREA (100-YEAR) (ha)	AREA (ROOF) (ha)	C (2-YEAR) (-)	C (5-YEAR) (-)	C (10-YEAR) (-)	C (100-YEAR) (-)	A x C (2-YEAR) (ha)	ACCUM AxC (2YR) (ha)	A x C (5-YEAR) (ha)	ACCUM. AxC (5YR) (ha)	A x C (10-YEAR) (ha)	ACCUM. AxC (10YR) (ha)	A x C (100-YEAR) (ha)	ACCUM. AxC (100YR) (ha)	T of C (min)	$I_{2\text{-YEAR}}$ (mm/h)	$I_{5\text{-YEAR}}$ (mm/h)	$I_{10\text{-YEAR}}$ (mm/h)	$I_{100\text{-YEAR}}$ (mm/h)	$Q_{CONTROL}$ (L/s)	ACCUM. $Q_{CONTROL}$ (L/s)	Q_{ACT} (CIA/360) (L/s)	LENGTH (m)	PIPE WIDTH OR DIAMETER (mm)	PIPE HEIGHT (mm)	PIPE SHAPE (-)	MATERIAL (-)	CLASS (-)	SLOPE %	Q_{CAP} (FULL) (L/s)	% FULL (-)	VEL. (FULL) (m/s)	VEL. (ACT) (m/s)	TIME OF FLOW (min)
L203A	CB 203	102	0.08	0.00	0.00	0.00	0.00	0.81	0.00	0.00	0.00	0.065	0.065	0.000	0.000	0.000	0.000	0.000	0.000	10.00	76.81	104.19	122.14	178.56	0.0	0.0	13.8	28.9	200	200	CIRCULAR	PVC	-	1.00	33.3	**41.5%**	1.05	0.84	0.57
EX-BLDG, L202A	102	101	0.10	0.00	0.00	0.07	0.00	0.75	0.00	0.00	0.90	0.075	0.140	0.000	0.000	0.000	0.000	0.063	0.063	10.57	74.68	101.27	118.70	173.50	0.0	0.0	59.4	42.2	375	375	CIRCULAR	PVC	-	0.50	116.6	**50.9%**	1.11	0.95	0.74
	101	100	0.00	0.00	0.00	0.00	0.00	0.00	0.00	0.00	0.00	0.000	0.140	0.000	0.000	0.000	0.000	0.000	0.063	11.31	72.12	97.75	114.56	167.42	0.0	0.0	57.3	69.3	375	375	CIRCULAR	PVC	-	0.50	116.6	**49.2%**	1.11	0.94	1.23
RAMP, BLDG1, BLDG2, BLDG3, BLDG4, BLDG5, BLDG6, BLDG7, BLDG8, BLDG9, L201A	100	EX CSP	0.14	0.00	0.00	0.00	0.12	0.68	0.00	0.00	0.00	0.095	0.235	0.000	0.000	0.000	0.000	0.000	0.063	12.54	68.25	92.44	108.30	158.24	10.8	10.8	83.0	3.4	375	375	CIRCULAR	CSP	-	2.00	233.1	**35.6%**	2.21	1.70	0.03
																				12.58									375	375									

Stantec

851 RICHMOND ROAD

DATE: 2018/06/29
REVISION: 3
DESIGNED BY: WAJ
CHECKED BY: NPC

STORM SEWER DESIGN SHEET

(City of Ottawa)

(Free Flow Analysis)

FILE NUMBER: 160401329

DESIGN PARAMETERS

$I = a / (t+b)^c$ (As per City of Ottawa Guidelines, 2012)

	1:2 yr	1:5 yr	1:10 yr	1:100 yr
a =	732.951	998.071	1174.184	1735.688
b =	6.199	6.053	6.014	6.014
c =	0.810	0.814	0.816	0.820

MANNING'S n = 0.013
MINIMUM COVER: 2.00 m
TIME OF ENTRY 10 min
BEDDING CLASS B

LOCATION			DRAINAGE AREA																					PIPE SELECTION											
AREA ID NUMBER	FROM M.H.	TO M.H.	AREA (2-YEAR) (ha)	AREA (5-YEAR) (ha)	AREA (10-YEAR) (ha)	AREA (100-YEAR) (ha)	AREA (ROOF) (ha)	C (2-YEAR) (-)	C (5-YEAR) (-)	C (10-YEAR) (-)	C (100-YEAR) (-)	A x C (2-YEAR) (ha)	ACCUM AxC (2YR) (ha)	A x C (5-YEAR) (ha)	ACCUM. AxC (5YR) (ha)	A x C (10-YEAR) (ha)	ACCUM. AxC (10YR) (ha)	A x C (100-YEAR) (ha)	ACCUM. AxC (100YR) (ha)	T of C (min)	$I_{2\text{-YEAR}}$ (mm/h)	$I_{5\text{-YEAR}}$ (mm/h)	$I_{10\text{-YEAR}}$ (mm/h)	$I_{100\text{-YEAR}}$ (mm/h)	$Q_{CONTROL}$ (L/s)	ACCUM. $Q_{CONTROL}$ (L/s)	Q_{ACT} (CIA/360) (L/s)	LENGTH (m)	PIPE WIDTH OR DIAMETER (mm)	PIPE HEIGHT (mm)	PIPE SHAPE (-)	MATERIAL (-)	CLASS (-)	SLOPE %	Q_{CAP} (FULL) (L/s)	% FULL (-)	VEL. (FULL) (m/s)	VEL. (ACT) (m/s)	TIME OF FLOW (min)
L203A	CB 203	102	0.00	0.00	0.00	0.08	0.00	0.00	0.00	0.00	0.81	0.000	0.000	0.000	0.000	0.000	0.000	0.065	0.065	10.00	76.81	104.19	122.14	178.56	0.0	0.0	32.1	28.9	200	200	CIRCULAR	PVC	-	1.00	33.3	**96.5%**	1.05	1.09	0.44
EX-BLDG, L202A	102	101	0.00	0.00	0.00	0.17	0.00	0.00	0.00	0.00	0.81	0.000	0.000	0.000	0.000	0.000	0.000	0.138	0.203	10.44	75.15	101.92	119.46	174.62	0.0	0.0	98.4	42.2	375	375	CIRCULAR	PVC	-	0.50	116.6	**84.4%**	1.11	1.11	0.64
	101	100	0.00	0.00	0.00	0.00	0.00	0.00	0.00	0.00	0.00	0.000	0.000	0.000	0.000	0.000	0.000	0.000	0.203	11.08	72.90	98.83	115.82	169.28	0.0	0.0	95.4	69.3	375	375	CIRCULAR	PVC	-	0.50	116.6	**81.8%**	1.11	1.10	1.05
RAMP, BLDG1-9, L201A	100	EX CSP	0.00	0.00	0.00	0.14	0.12	0.00	0.00	0.00	0.68	0.000	0.000	0.000	0.000	0.000	0.000	0.095	0.298	12.13	69.49	94.14	110.30	161.17	10.8	10.8	144.0	3.4	375	375	CIRCULAR	CSP	-	2.00	233.1	**61.8%**	2.21	2.01	0.03
																				12.16									375	375								

Project #160401329, 851 RICHMOND ROAD
Roof Drain Design Sheet, Area BLDG1
Standard Watts Model R1100 Accuflow Roof Drain

Rating Curve				Volume Estimation				
Elevation (m)	Discharge Rate (cu.m/s)	Outlet Discharge (cu.m/s)	Storage (cu. m)	Elevation (m)	Area (sq. m)	Volume (cu. m) Increment	Volume (cu. m) Accumulated	Water Depth (m)
0.000	0.0000	0.0000	0	0.000	0	0	0	0.000
0.025	0.0003	0.0003	0	0.025	4	0	0	0.025
0.050	0.0006	0.0006	0	0.050	14	0	0	0.050
0.075	0.0008	0.0008	1	0.075	33	1	1	0.075
0.100	0.0009	0.0009	2	0.100	58	1	2	0.100
0.125	0.0011	0.0011	4	0.125	90	2	4	0.125
0.150	0.0013	0.0013	7	0.150	130	3	7	0.150

Drawdown Estimate			
Total Volume (cu.m)	Total Time (sec)	Vol (cu.m)	Detention Time (hr)
0.0	0.0	0.0	0
0.2	334.4	0.2	0.09289
0.8	726.1	0.6	0.29459
1.9	1178.4	1.1	0.62191
3.7	1665.2	1.8	1.08445
6.5	2173.6	2.7	1.68823

Rooftop Storage Summary

Total Building Area (sq.m)		186
Assume Available Roof Area (sq.	70%	130.2
Roof Imperviousness		0.99
Roof Drain Requirement (sq.m/Notch)		232
Number of Roof Notches*		1
Max. Allowable Depth of Roof Ponding (m)		0.15
Max. Allowable Storage (cu.m)		7
Estimated 100 Year Drawdown Time (h)		1.7

* As per Ontario Building Code section OBC 7.4.10.4.(2)(c).

From Watts Drain Catalogue

Head (m) L/s

	Open	75%	**50%**	25%	Closed
0.025	0.3155	0.31545	**0.31545**	0.31545	0.31545
0.050	0.6309	0.6309	**0.6309**	0.6309	0.6309
0.075	0.9464	0.86749	**0.78863**	0.70976	0.6309
0.100	1.2618	1.10408	**0.94635**	0.78863	0.6309
0.125	1.5773	1.34067	**1.10408**	0.86749	0.6309
0.150	1.8927	1.57726	**1.2618**	0.94635	0.6309

* Note: Number of drains can be reduced if multiple-notch drain used.

Calculation Results	**2yr**	**100yr**	**Available**
Qresult (cu.m/s)	0.001	0.001	-
Depth (m)	0.097	0.148	0.150
Volume (cu.m)	1.8	6.3	6.5
Draintime (hrs)	0.6	1.7	

Project #160401329, 851 RICHMOND ROAD
Roof Drain Design Sheet, Area BLDG2
Standard Watts Model R1100 Accuflow Roof Drain

Rating Curve				Volume Estimation				
Elevation (m)	Discharge Rate (cu.m/s)	Outlet Discharge (cu.m/s)	Storage (cu. m)	Elevation (m)	Area (sq. m)	Volume (cu. m) Increment	Volume (cu. m) Accumulated	Water Depth (m)
0.000	0.0000	0.0000	0	0.000	0	0	0	0.000
0.025	0.0003	0.0003	0	0.025	2	0	0	0.025
0.050	0.0006	0.0006	0	0.050	10	0	0	0.050
0.075	0.0008	0.0008	1	0.075	22	0	1	0.075
0.100	0.0009	0.0009	1	0.100	40	1	1	0.100
0.125	0.0011	0.0011	3	0.125	62	1	3	0.125
0.150	0.0013	0.0013	4	0.150	90	2	4	0.150

Drawdown Estimate			
Total Volume (cu.m)	Total Time (sec)	Vol (cu.m)	Detention Time (hr)
0.0	0.0	0.0	0
0.1	230.1	0.1	0.06392
0.5	499.7	0.4	0.20273
1.3	810.9	0.8	0.42798
2.6	1145.9	1.3	0.74629
4.5	1495.8	1.9	1.16179

Rooftop Storage Summary

Total Building Area (sq.m)		128
Assume Available Roof Area (sq.	70%	89.6
Roof Imperviousness		0.99
Roof Drain Requirement (sq.m/Notch)		232
Number of Roof Notches*		1
Max. Allowable Depth of Roof Ponding (m)		0.15
Max. Allowable Storage (cu.m)		4
Estimated 100 Year Drawdown Time (h)		1.0

* As per Ontario Building Code section OBC 7.4.10.4.(2)(c).

From Watts Drain Catalogue

Head (m) L/s

	Open	75%	**50%**	25%	Closed
0.025	0.3155	0.31545	**0.31545**	0.31545	0.31545
0.050	0.6309	0.6309	**0.6309**	0.6309	0.6309
0.075	0.9464	0.86749	**0.78863**	0.70976	0.6309
0.100	1.2618	1.10408	**0.94635**	0.78863	0.6309
0.125	1.5773	1.34067	**1.10408**	0.86749	0.6309
0.150	1.8927	1.57726	**1.2618**	0.94635	0.6309

* Note: Number of drains can be reduced if multiple-notch drain used.

Calculation Results	**2yr**	**100yr**	**Available**
Qresult (cu.m/s)	0.001	0.001	-
Depth (m)	0.088	0.140	0.150
Volume (cu.m)	1.0	3.7	4.5
Draintime (hrs)	0.3	1.0	

Project #160401329, 851 RICHMOND ROAD
Roof Drain Design Sheet, Area BLDG3
Standard Watts Model R1100 Accuflow Roof Drain

Rating Curve				Volume Estimation				
Elevation (m)	Discharge Rate (cu.m/s)	Outlet Discharge (cu.m/s)	Storage (cu. m)	Elevation (m)	Area (sq. m)	Volume (cu. m) Increment	Volume (cu. m) Accumulated	Water Depth (m)
0.000	0.0000	0.0000	0	0.000	0	0	0	0.000
0.025	0.0003	0.0003	0	0.025	2	0	0	0.025
0.050	0.0006	0.0006	0	0.050	10	0	0	0.050
0.075	0.0008	0.0008	1	0.075	22	0	1	0.075
0.100	0.0009	0.0009	1	0.100	40	1	1	0.100
0.125	0.0011	0.0011	3	0.125	62	1	3	0.125
0.150	0.0013	0.0013	4	0.150	89	2	4	0.150

Drawdown Estimate			
Total Volume (cu.m)	Total Time (sec)	Vol (cu.m)	Detention Time (hr)
0.0	0.0	0.0	0
0.1	228.3	0.1	0.06342
0.5	495.8	0.4	0.20114
1.3	804.6	0.8	0.42464
2.6	1137.0	1.3	0.74046
4.4	1484.1	1.9	1.15272

Rooftop Storage Summary

Total Building Area (sq.m)		127
Assume Available Roof Area (sq.	70%	88.9
Roof Imperviousness		0.99
Roof Drain Requirement (sq.m/Notch)		232
Number of Roof Notches*		1
Max. Allowable Depth of Roof Ponding (m)		0.15
Max. Allowable Storage (cu.m)		4
Estimated 100 Year Drawdown Time (h)		1.0

* As per Ontario Building Code section OBC 7.4.10.4.(2)(c).

From Watts Drain Catalogue

Head (m)	L/s Open	75%	**50%**	25%	Closed
0.025	0.3155	0.31545	**0.31545**	0.31545	0.31545
0.050	0.6309	0.6309	**0.6309**	0.6309	0.6309
0.075	0.9464	0.86749	**0.78863**	0.70976	0.6309
0.100	1.2618	1.10408	**0.94635**	0.78863	0.6309
0.125	1.5773	1.34067	**1.10408**	0.86749	0.6309
0.150	1.8927	1.57726	**1.2618**	0.94635	0.6309

* Note: Number of drains can be reduced if multiple-notch drain used.

Calculation Results	**2yr**	**100yr**	**Available**
Qresult (cu.m/s)	0.001	0.001	-
Depth (m)	0.088	0.140	0.150
Volume (cu.m)	0.9	3.7	4.4
Draintime (hrs)	0.3	1.0	

Project #160401329, 851 RICHMOND ROAD
Roof Drain Design Sheet, Area BLDG4
Standard Watts Model R1100 Accuflow Roof Drain

Rating Curve				Volume Estimation				
Elevation (m)	Discharge Rate (cu.m/s)	Outlet Discharge (cu.m/s)	Storage (cu. m)	Elevation (m)	Area (sq. m)	Volume (cu. m) Increment	Volume (cu. m) Accumulated	Water Depth (m)
0.000	0.0000	0.0000	0	0.000	0	0	0	0.000
0.025	0.0003	0.0003	0	0.025	3	0	0	0.025
0.050	0.0006	0.0006	0	0.050	12	0	0	0.050
0.075	0.0008	0.0008	1	0.075	26	0	1	0.075
0.100	0.0009	0.0009	2	0.100	46	1	2	0.100
0.125	0.0011	0.0011	3	0.125	72	1	3	0.125
0.150	0.0013	0.0013	5	0.150	104	2	5	0.150

Drawdown Estimate			
Total Volume (cu.m)	Total Time (sec)	Vol (cu.m)	Detention Time (hr)
0.0	0.0	0.0	0
0.2	267.9	0.2	0.07441
0.6	581.7	0.5	0.23599
1.5	944.0	0.9	0.4982
3.0	1333.9	1.5	0.86873
5.2	1741.2	2.2	1.3524

Rooftop Storage Summary

Total Building Area (sq.m)		149
Assume Available Roof Area (sq.	70%	104.3
Roof Imperviousness		0.99
Roof Drain Requirement (sq.m/Notch)		232
Number of Roof Notches*		1
Max. Allowable Depth of Roof Ponding (m)		0.15
Max. Allowable Storage (cu.m)		5
Estimated 100 Year Drawdown Time (h)		1.2

* As per Ontario Building Code section OBC 7.4.10.4.(2)(c).

From Watts Drain Catalogue

Head (m) L/s

	Open	75%	**50%**	25%	Closed
0.025	0.3155	0.31545	**0.31545**	0.31545	0.31545
0.050	0.6309	0.6309	**0.6309**	0.6309	0.6309
0.075	0.9464	0.86749	**0.78863**	0.70976	0.6309
0.100	1.2618	1.10408	**0.94635**	0.78863	0.6309
0.125	1.5773	1.34067	**1.10408**	0.86749	0.6309
0.150	1.8927	1.57726	**1.2618**	0.94635	0.6309

* Note: Number of drains can be reduced if multiple-notch drain used.

Calculation Results	**2yr**	**100yr**	**Available**
Qresult (cu.m/s)	0.001	0.001	-
Depth (m)	0.092	0.144	0.150
Volume (cu.m)	1.3	4.7	5.2
Draintime (hrs)	0.4	1.2	

Project #160401329, 851 RICHMOND ROAD
Roof Drain Design Sheet, Area BLDG5
Standard Watts Model R1100 Accuflow Roof Drain

Rating Curve				Volume Estimation				
Elevation (m)	Discharge Rate (cu.m/s)	Outlet Discharge (cu.m/s)	Storage (cu. m)	Elevation (m)	Area (sq. m)	Volume (cu. m) Increment	Volume (cu. m) Accumulated	Water Depth (m)
0.000	0.0000	0.0000	0	0.000	0	0	0	0.000
0.025	0.0003	0.0003	0	0.025	3	0	0	0.025
0.050	0.0006	0.0006	0	0.050	13	0	0	0.050
0.075	0.0008	0.0008	1	0.075	29	1	1	0.075
0.100	0.0009	0.0009	2	0.100	51	1	2	0.100
0.125	0.0011	0.0011	3	0.125	80	2	3	0.125
0.150	0.0013	0.0013	6	0.150	116	2	6	0.150

Drawdown Estimate			
Total Volume (cu.m)	Total Time (sec)	Vol (cu.m)	Detention Time (hr)
0.0	0.0	0.0	0
0.2	296.6	0.2	0.0824
0.7	644.1	0.5	0.26133
1.7	1045.3	1.0	0.55169
3.3	1477.2	1.6	0.96202
5.7	1928.2	2.4	1.49762

Rooftop Storage Summary

Total Building Area (sq.m)		165
Assume Available Roof Area (sq.	70%	115.5
Roof Imperviousness		0.99
Roof Drain Requirement (sq.m/Notch)		232
Number of Roof Notches*		1
Max. Allowable Depth of Roof Ponding (m)		0.15
Max. Allowable Storage (cu.m)		6
Estimated 100 Year Drawdown Time (h)		1.4

* As per Ontario Building Code section OBC 7.4.10.4.(2)(c).

From Watts Drain Catalogue

Head (m) L/s

	Open	75%	**50%**	25%	Closed
0.025	0.3155	0.31545	**0.31545**	0.31545	0.31545
0.050	0.6309	0.6309	**0.6309**	0.6309	0.6309
0.075	0.9464	0.86749	**0.78863**	0.70976	0.6309
0.100	1.2618	1.10408	**0.94635**	0.78863	0.6309
0.125	1.5773	1.34067	**1.10408**	0.86749	0.6309
0.150	1.8927	1.57726	**1.2618**	0.94635	0.6309

* Note: Number of drains can be reduced if multiple-notch drain used.

Calculation Results	**2yr**	**100yr**	**Available**
Qresult (cu.m/s)	0.001	0.001	-
Depth (m)	0.094	0.146	0.150
Volume (cu.m)	1.5	5.4	5.8
Draintime (hrs)	0.5	1.4	

Project #160401329, 851 RICHMOND ROAD
Roof Drain Design Sheet, Area BLDG6
Standard Watts Model R1100 Accuflow Roof Drain

Rating Curve				Volume Estimation				
Elevation (m)	Discharge Rate (cu.m/s)	Outlet Discharge (cu.m/s)	Storage (cu. m)	Elevation (m)	Area (sq. m)	Volume (cu. m) Increment	Volume (cu. m) Accumulated	Water Depth (m)
0.000	0.0000	0.0000	0	0.000	0	0	0	0.000
0.025	0.0003	0.0003	0	0.025	4	0	0	0.025
0.050	0.0006	0.0006	0	0.050	16	0	0	0.050
0.075	0.0008	0.0008	1	0.075	36	1	1	0.075
0.100	0.0009	0.0009	2	0.100	63	1	2	0.100
0.125	0.0011	0.0011	4	0.125	99	2	4	0.125
0.150	0.0013	0.0013	7	0.150	143	3	7	0.150

Drawdown Estimate			
Total Volume (cu.m)	Total Time (sec)	Vol (cu.m)	Detention Time (hr)
0.0	0.0	0.0	0
0.2	366.8	0.2	0.10188
0.9	796.4	0.6	0.3231
2.1	1292.4	1.2	0.68209
4.1	1826.3	2.0	1.1894
7.1	2383.9	3.0	1.85161

Rooftop Storage Summary

Total Building Area (sq.m)		204
Assume Available Roof Area (sq.	70%	142.8
Roof Imperviousness		0.99
Roof Drain Requirement (sq.m/Notch)		232
Number of Roof Notches*		1
Max. Allowable Depth of Roof Ponding (m)		0.15
Max. Allowable Storage (cu.m)		7
Estimated 100 Year Drawdown Time (h)		1.9

* As per Ontario Building Code section OBC 7.4.10.4.(2)(c).

From Watts Drain Catalogue

Head (m) L/s

	Open	75%	**50%**	25%	Closed
0.025	0.3155	0.31545	**0.31545**	0.31545	0.31545
0.050	0.6309	0.6309	**0.6309**	0.6309	0.6309
0.075	0.9464	0.86749	**0.78863**	0.70976	0.6309
0.100	1.2618	1.10408	**0.94635**	0.78863	0.6309
0.125	1.5773	1.34067	**1.10408**	0.86749	0.6309
0.150	1.8927	1.57726	**1.2618**	0.94635	0.6309

* Note: Number of drains can be reduced if multiple-notch drain used.

Calculation Results	**2yr**	**100yr**	**Available**
Qresult (cu.m/s)	0.001	0.001	-
Depth (m)	0.099	0.150	0.150
Volume (cu.m)	2.1	7.2	7.2
Draintime (hrs)	0.7	1.9	

Project #160401329, 851 RICHMOND ROAD
Roof Drain Design Sheet, Area BLDG7
Standard Watts Model R1100 Accuflow Roof Drain

Rating Curve				Volume Estimation				
Elevation (m)	Discharge Rate (cu.m/s)	Outlet Discharge (cu.m/s)	Storage (cu. m)	Elevation (m)	Area (sq. m)	Volume (cu. m) Increment	Volume (cu. m) Accumulated	Water Depth (m)
0.000	0.0000	0.0000	0	0.000	0	0	0	0.000
0.025	0.0003	0.0003	0	0.025	2	0	0	0.025
0.050	0.0006	0.0006	0	0.050	7	0	0	0.050
0.075	0.0008	0.0008	0	0.075	15	0	0	0.075
0.100	0.0009	0.0009	1	0.100	26	1	1	0.100
0.125	0.0011	0.0011	2	0.125	41	1	2	0.125
0.150	0.0013	0.0013	3	0.150	60	1	3	0.150

Drawdown Estimate			
Total Volume (cu.m)	Total Time (sec)	Vol (cu.m)	Detention Time (hr)
0.0	0.0	0.0	0
0.1	152.8	0.1	0.04245
0.4	331.8	0.3	0.13462
0.9	538.5	0.5	0.28421
1.7	761.0	0.8	0.49558
3.0	993.3	1.3	0.7715

Rooftop Storage Summary

Total Building Area (sq.m)		85
Assume Available Roof Area (sq.	70%	59.5
Roof Imperviousness		0.99
Roof Drain Requirement (sq.m/Notch)		232
Number of Roof Notches*		1
Max. Allowable Depth of Roof Ponding (m)		0.15
Max. Allowable Storage (cu.m)		3
Estimated 100 Year Drawdown Time (h)		0.6

* As per Ontario Building Code section OBC 7.4.10.4.(2)(c).

From Watts Drain Catalogue

Head (m)	L/s Open	75%	**50%**	25%	Closed
0.025	0.3155	0.31545	**0.31545**	0.31545	0.31545
0.050	0.6309	0.6309	**0.6309**	0.6309	0.6309
0.075	0.9464	0.86749	**0.78863**	0.70976	0.6309
0.100	1.2618	1.10408	**0.94635**	0.78863	0.6309
0.125	1.5773	1.34067	**1.10408**	0.86749	0.6309
0.150	1.8927	1.57726	**1.2618**	0.94635	0.6309

* Note: Number of drains can be reduced if multiple-notch drain used.

Calculation Results	**2yr**	**100yr**	**Available**
Qresult (cu.m/s)	0.001	0.001	-
Depth (m)	0.081	0.131	0.150
Volume (cu.m)	0.5	2.0	3.0
Draintime (hrs)	0.2	0.6	

Project #160401329, 851 RICHMOND ROAD
Roof Drain Design Sheet, Area BLDG8
Standard Watts Model R1100 Accuflow Roof Drain

Rating Curve				Volume Estimation				
Elevation (m)	Discharge Rate (cu.m/s)	Outlet Discharge (cu.m/s)	Storage (cu. m)	Elevation (m)	Area (sq. m)	Volume (cu. m) Increment	Volume (cu. m) Accumulated	Water Depth (m)
0.000	0.0000	0.0000	0	0.000	0	0	0	0.000
0.025	0.0003	0.0003	0	0.025	2	0	0	0.025
0.050	0.0006	0.0006	0	0.050	7	0	0	0.050
0.075	0.0008	0.0008	0	0.075	15	0	0	0.075
0.100	0.0009	0.0009	1	0.100	26	1	1	0.100
0.125	0.0011	0.0011	2	0.125	41	1	2	0.125
0.150	0.0013	0.0013	3	0.150	60	1	3	0.150

Drawdown Estimate			
Total Volume (cu.m)	Total Time (sec)	Vol (cu.m)	Detention Time (hr)
0.0	0.0	0.0	0
0.1	152.8	0.1	0.04245
0.4	331.8	0.3	0.13462
0.9	538.5	0.5	0.28421
1.7	761.0	0.8	0.49558
3.0	993.3	1.3	0.7715

Rooftop Storage Summary

Total Building Area (sq.m)		85
Assume Available Roof Area (sq.	70%	59.5
Roof Imperviousness		0.99
Roof Drain Requirement (sq.m/Notch)		232
Number of Roof Notches*		1
Max. Allowable Depth of Roof Ponding (m)		0.15
Max. Allowable Storage (cu.m)		3
Estimated 100 Year Drawdown Time (h)		0.6

* As per Ontario Building Code section OBC 7.4.10.4.(2)(c).

From Watts Drain Catalogue

Head (m) L/s

	Open	75%	**50%**	25%	Closed
0.025	0.3155	0.31545	**0.31545**	0.31545	0.31545
0.050	0.6309	0.6309	**0.6309**	0.6309	0.6309
0.075	0.9464	0.86749	**0.78863**	0.70976	0.6309
0.100	1.2618	1.10408	**0.94635**	0.78863	0.6309
0.125	1.5773	1.34067	**1.10408**	0.86749	0.6309
0.150	1.8927	1.57726	**1.2618**	0.94635	0.6309

* Note: Number of drains can be reduced if multiple-notch drain used.

Calculation Results	**2yr**	**100yr**	**Available**
Qresult (cu.m/s)	0.001	0.001	-
Depth (m)	0.081	0.131	0.150
Volume (cu.m)	0.5	2.0	3.0
Draintime (hrs)	0.2	0.6	

Project #160401329, 851 RICHMOND ROAD
Roof Drain Design Sheet, Area BLDG9
Standard Watts Model R1100 Accuflow Roof Drain

Rating Curve				Volume Estimation				
Elevation (m)	Discharge Rate (cu.m/s)	Outlet Discharge (cu.m/s)	Storage (cu. m)	Elevation (m)	Area (sq. m)	Volume (cu. m) Increment	Volume (cu. m) Accumulated	Water Depth (m)
0.000	0.0000	0.0000	0	0.000	0	0	0	0.000
0.025	0.0003	0.0003	0	0.025	1	0	0	0.025
0.050	0.0006	0.0006	0	0.050	3	0	0	0.050
0.075	0.0008	0.0008	0	0.075	7	0	0	0.075
0.100	0.0009	0.0009	0	0.100	12	0	0	0.100
0.125	0.0011	0.0011	1	0.125	19	0	1	0.125
0.150	0.0013	0.0013	1	0.150	28	1	1	0.150

Drawdown Estimate			
Total Volume (cu.m)	Total Time (sec)	Vol (cu.m)	Detention Time (hr)
0.0	0.0	0.0	0
0.0	71.9	0.0	0.01998
0.2	156.2	0.1	0.06335
0.4	253.4	0.2	0.13374
0.8	358.1	0.4	0.23322
1.4	467.4	0.6	0.36306

Rooftop Storage Summary

Total Building Area (sq.m)		40
Assume Available Roof Area (sq.	70%	28
Roof Imperviousness		0.99
Roof Drain Requirement (sq.m/Notch)		232
Number of Roof Notches*		1
Max. Allowable Depth of Roof Ponding (m)		0.15
Max. Allowable Storage (cu.m)		1
Estimated 100 Year Drawdown Time (h)		0.2

* As per Ontario Building Code section OBC 7.4.10.4.(2)(c).

From Watts Drain Catalogue

Head (m) L/s

	Open	75%	**50%**	25%	Closed
0.025	0.3155	0.31545	**0.31545**	0.31545	0.31545
0.050	0.6309	0.6309	**0.6309**	0.6309	0.6309
0.075	0.9464	0.86749	**0.78863**	0.70976	0.6309
0.100	1.2618	1.10408	**0.94635**	0.78863	0.6309
0.125	1.5773	1.34067	**1.10408**	0.86749	0.6309
0.150	1.8927	1.57726	**1.2618**	0.94635	0.6309

* Note: Number of drains can be reduced if multiple-notch drain used.

Calculation Results	**2yr**	**100yr**	**Available**
Qresult (cu.m/s)	0.001	0.001	-
Depth (m)	0.054	0.111	0.150
Volume (cu.m)	0.1	0.6	1.4
Draintime (hrs)	0.0	0.2	

Stormwater Management Calculations

File No: **160401329**
Project: **851 RICHMOND ROAD**
Date: **28-Aug-18**

SWM Approach:
Targets as per 40 Cleary Avenue Stormwater Management Report
Dated January 2007

Post-Development Site Conditions:

Overall Runoff Coefficient for Site and Sub-Catchment Areas

Runoff Coefficient Table

Catchment Type	Sub-catchment Area ID / Description		Area (ha) "A"	Runoff Coefficient "C"	"A x C"	Overall Runoff Coefficient
Uncontrolled - Non-Tributary	UNC-1	Hard	0.063	0.9	0.057	
		Soft	0.047	0.2	0.009	
		Subtotal	0.11		0.066	0.600
Uncontrolled - Tributary	L203A	Hard	0.070	0.9	0.063	
		Soft	0.010	0.2	0.002	
		Subtotal	0.08		0.0648	0.810
Uncontrolled - Tributary	L202A	Hard	0.079	0.9	0.071	
		Soft	0.021	0.2	0.004	
		Subtotal	0.1		0.075	0.750
Uncontrolled - Tributary	L201A	Hard	0.079	0.9	0.071	
		Soft	0.041	0.2	0.008	
		Subtotal	0.12		0.0792	0.660
Uncontrolled - Tributary	EXBLDG	Hard	0.070	0.9	0.063	
		Soft	0.000	0.2	0.000	
		Subtotal	0.07		0.063	0.900
Uncontrolled - Tributary	RAMP	Hard	0.017	0.9	0.015	
		Soft	0.003	0.2	0.001	
		Subtotal	0.02		0.0156	0.780
Roof	BLDG9	Hard	0.004	0.9	0.004	
		Soft	0.000	0.2	0.000	
		Subtotal	0.004		0.0036	0.900
Roof	BLDG8	Hard	0.009	0.9	0.008	
		Soft	0.000	0.2	0.000	
		Subtotal	0.0085		0.00765	0.900
Roof	BLDG7	Hard	0.009	0.9	0.008	
		Soft	0.000	0.2	0.000	
		Subtotal	0.0085		0.00765	0.900
Roof	BLDG6	Hard	0.020	0.9	0.018	
		Soft	0.000	0.2	0.000	
		Subtotal	0.0204		0.01836	0.900
Roof	BLDG5	Hard	0.017	0.9	0.015	
		Soft	0.000	0.2	0.000	
		Subtotal	0.0165		0.01485	0.900
Roof	BLDG4	Hard	0.015	0.9	0.013	
		Soft	0.000	0.2	0.000	
		Subtotal	0.0149		0.01341	0.900
Roof	BLDG3	Hard	0.013	0.9	0.011	
		Soft	0.000	0.2	0.000	
		Subtotal	0.0127		0.01143	0.900
Roof	BLDG2	Hard	0.013	0.9	0.012	
		Soft	0.000	0.2	0.000	
		Subtotal	0.0128		0.01152	0.900
Roof	BLDG1	Hard	0.019	0.9	0.017	
		Soft	0.000	0.2	0.000	
		Subtotal	0.0186		0.01674	0.900
Total			**0.617**		**0.469**	
Overall Runoff Coefficient= C:						**0.76**

Total Roof Areas	**0.117 ha**
Total Tributary Surface Areas (Controlled and Uncontrolled)	**0.390 ha**
Total Tributary Area to Outlet	**0.507 ha**
Total Uncontrolled Areas (Non-Tributary)	**0.110 ha**
Total Site	**0.617 ha**

Stormwater Management Calculations

Project #160401329, 851 RICHMOND ROAD
Modified Rational Method Calculatons for Storage

2 yr Intensity
City of Ottawa

$I = a/(t + b)^c$

a =	732.951
b =	6.199
c =	0.81

t (min)	I (mm/hr)
10	76.81
20	52.03
30	40.04
40	32.86
50	28.04
60	24.56
70	21.91
80	19.83
90	18.14
100	16.75
110	15.57
120	14.56

2 YEAR Predevelopment Target Release from Portion of Site

Targets as per 40 Cleary Avenue Stormwater Management Report Dated January 2007

Subdrainage Area:
Area (ha): 0.6000

Typical Time of Concentration

tc (min)	I (2 yr) (mm/hr)	Qtarget (L/s)
10	76.81	**267.8**

2 YEAR Modified Rational Method for Entire Site

Subdrainage Area: UNC-1 — Uncontrolled - Non-Tributary
Area (ha): 0.11
C: 0.60

tc (min)	I (2 yr) (mm/hr)	Qactual (L/s)	Qrelease (L/s)	Qstored (L/s)	Vstored (m^3)
10	76.81	14.1	14.1		
20	52.03	9.5	9.5		
30	40.04	7.3	7.3		
40	32.86	6.0	6.0		
50	28.04	5.1	5.1		
60	24.56	4.5	4.5		
70	21.91	4.0	4.0		
80	19.83	3.6	3.6		
90	18.14	3.3	3.3		
100	16.75	3.1	3.1		
110	15.57	2.9	2.9		
120	14.56	2.7	2.7		

Subdrainage Area: L203A — Uncontrolled - Tributary
Area (ha): 0.08
C: 0.81

tc (min)	I (2 yr) (mm/hr)	Qactual (L/s)	Qrelease (L/s)	Qstored (L/s)	Vstored (m^3)
10	76.81	13.8	13.8		
20	52.03	9.4	9.4		
30	40.04	7.2	7.2		
40	32.86	5.9	5.9		
50	28.04	5.1	5.1		
60	24.56	4.4	4.4		
70	21.91	3.9	3.9		
80	19.83	3.6	3.6		
90	18.14	3.3	3.3		
100	16.75	3.0	3.0		
110	15.57	2.8	2.8		
120	14.56	2.6	2.6		

Subdrainage Area: L202A — Uncontrolled - Tributary
Area (ha): 0.10
C: 0.75

tc (min)	I (2 yr) (mm/hr)	Qactual (L/s)	Qrelease (L/s)	Qstored (L/s)	Vstored (m^3)
10	76.81	16.0	16.0		
20	52.03	10.8	10.8		
30	40.04	8.3	8.3		
40	32.86	6.9	6.9		
50	28.04	5.8	5.8		
60	24.56	5.1	5.1		
70	21.91	4.6	4.6		
80	19.83	4.1	4.1		
90	18.14	3.8	3.8		
100	16.75	3.5	3.5		
110	15.57	3.2	3.2		
120	14.56	3.0	3.0		

Subdrainage Area: L201A — Uncontrolled - Tributary
Area (ha): 0.12
C: 0.66

tc (min)	I (2 yr) (mm/hr)	Qactual (L/s)	Qrelease (L/s)	Qstored (L/s)	Vstored (m^3)
10	76.81	16.9	16.9		
20	52.03	11.5	11.5		
30	40.04	8.8	8.8		
40	32.86	7.2	7.2		
50	28.04	6.2	6.2		
60	24.56	5.4	5.4		
70	21.91	4.8	4.8		
80	19.83	4.4	4.4		
90	18.14	4.0	4.0		
100	16.75	3.7	3.7		
110	15.57	3.4	3.4		
120	14.56	3.2	3.2		

Subdrainage Area: EXBLDG — Uncontrolled - Tributary
Area (ha): 0.07
C: 0.90

Project #160401329, 851 RICHMOND ROAD
Modified Rational Method Calculatons for Storage

100 yr Intensity
City of Ottawa

$I = a/(t + b)^c$

a =	1735.688
b =	6.014
c =	0.820

t (min)	I (mm/hr)
10	178.56
20	119.95
30	91.87
40	75.15
50	63.95
60	55.89
70	49.79
80	44.99
90	41.11
100	37.90
110	35.20
120	32.89

100 YEAR Predevelopment Target Release from Portion of Site

Targets as per 40 Cleary Avenue Stormwater Management Report Dated January 2007

Subdrainage Area:
Area (ha): 0.6000
Allowable C-Value 0.90

tc (min)	I (100 yr) (mm/hr)	Q100yr (L/s)
10	178.56	**267.8**

100 YEAR Modified Rational Method for Entire Site

Subdrainage Area: UNC-1 — Uncontrolled - Non-Tributary
Area (ha): 0.11
C: 0.75

tc (min)	I (100 yr) (mm/hr)	Qactual (L/s)	Qrelease (L/s)	Qstored (L/s)	Vstored (m^3)
10	178.56	41.0	41.0		
20	119.95	27.5	27.5		
30	91.87	21.1	21.1		
40	75.15	17.2	17.2		
50	63.95	14.7	14.7		
60	55.89	12.8	12.8		
70	49.79	11.4	11.4		
80	44.99	10.3	10.3		
90	41.11	9.4	9.4		
100	37.90	8.7	8.7		
110	35.20	8.1	8.1		
120	32.89	7.5	7.5		

Subdrainage Area: L203A — Uncontrolled - Tributary
Area (ha): 0.08
C: 1.00

tc (min)	I (100 yr) (mm/hr)	Qactual (L/s)	Qrelease (L/s)	Qstored (L/s)	Vstored (m^3)
10	178.56	39.7	39.7		
20	119.95	26.7	26.7		
30	91.87	20.4	20.4		
40	75.15	16.7	16.7		
50	63.95	14.2	14.2		
60	55.89	12.4	12.4		
70	49.79	11.1	11.1		
80	44.99	10.0	10.0		
90	41.11	9.1	9.1		
100	37.90	8.4	8.4		
110	35.20	7.8	7.8		
120	32.89	7.3	7.3		

Subdrainage Area: L202A — Uncontrolled - Tributary
Area (ha): 0.10
C: 0.94

tc (min)	I (100 yr) (mm/hr)	Qactual (L/s)	Qrelease (L/s)	Qstored (L/s)	Vstored (m^3)
10	178.56	46.5	46.5		
20	119.95	31.3	31.3		
30	91.87	23.9	23.9		
40	75.15	19.6	19.6		
50	63.95	16.7	16.7		
60	55.89	14.6	14.6		
70	49.79	13.0	13.0		
80	44.99	11.7	11.7		
90	41.11	10.7	10.7		
100	37.90	9.9	9.9		
110	35.20	9.2	9.2		
120	32.89	8.6	8.6		

Subdrainage Area: L201A — Uncontrolled - Tributary
Area (ha): 0.12
C: 0.83

tc (min)	I (100 yr) (mm/hr)	Qactual (L/s)	Qrelease (L/s)	Qstored (L/s)	Vstored (m^3)
10	178.56	49.1	49.1		
20	119.95	33.0	33.0		
30	91.87	25.3	25.3		
40	75.15	20.7	20.7		
50	63.95	17.6	17.6		
60	55.89	15.4	15.4		
70	49.79	13.7	13.7		
80	44.99	12.4	12.4		
90	41.11	11.3	11.3		
100	37.90	10.4	10.4		
110	35.20	9.7	9.7		
120	32.89	9.1	9.1		

Subdrainage Area: EXBLDG — Uncontrolled - Tributary
Area (ha): 0.07
C: 1.00

Stormwater Management Calculations

Project #160401329, 851 RICHMOND ROAD
Modified Rational Method Calculatons for Storage

tc (min)	I (2 yr) (mm/hr)	Qactual (L/s)	Qrelease (L/s)	Qstored (L/s)	Vstored (m^3)
10	76.81	13.5	13.5		
20	52.03	9.1	9.1		
30	40.04	7.0	7.0		
40	32.86	5.8	5.8		
50	28.04	4.9	4.9		
60	24.56	4.3	4.3		
70	21.91	3.8	3.8		
80	19.83	3.5	3.5		
90	18.14	3.2	3.2		
100	16.75	2.9	2.9		
110	15.57	2.7	2.7		
120	14.56	2.6	2.6		

Subdrainage Area: RAMP — Uncontrolled - Tributary
Area (ha): 0.02
C: 0.78

tc (min)	I (2 yr) (mm/hr)	Qactual (L/s)	Qrelease (L/s)	Qstored (L/s)	Vstored (m^3)
10	76.81	3.3	3.3		
20	52.03	2.3	2.3		
30	40.04	1.7	1.7		
40	32.86	1.4	1.4		
50	28.04	1.2	1.2		
60	24.56	1.1	1.1		
70	21.91	1.0	1.0		
80	19.83	0.9	0.9		
90	18.14	0.8	0.8		
100	16.75	0.7	0.7		
110	15.57	0.7	0.7		
120	14.56	0.6	0.6		

Subdrainage Area: BLDG9 — Roof
Area (ha): 0.004 — Maximum Storage Depth: 150 mm
C: 0.90

tc (min)	I (2 yr) (mm/hr)	Qactual (L/s)	Qrelease (L/s)	Qstored (L/s)	Vstored (m^3)	Depth (mm)	
10	76.81	0.8	0.7	0.1	**0.1**	53.5	0.00
20	52.03	0.5	0.5	0.0	0.0	39.1	0.00
30	40.04	0.4	0.4	0.0	0.0	31.0	0.00
40	32.86	0.3	0.3	0.0	0.0	25.8	0.00
50	28.04	0.3	0.3	0.0	0.0	22.1	0.00
60	24.56	0.2	0.2	0.0	0.0	19.4	0.00
70	21.91	0.2	0.2	0.0	0.0	17.3	0.00
80	19.83	0.2	0.2	0.0	0.0	15.7	0.00
90	18.14	0.2	0.2	0.0	0.0	14.3	0.00
100	16.75	0.2	0.2	0.0	0.0	13.2	0.00
110	15.57	0.2	0.2	0.0	0.0	12.3	0.00
120	14.56	0.1	0.1	0.0	0.0	11.5	0.00

Storage: Roof Storage

	Depth (mm)	Head (m)	Discharge (L/s)	Vreq (cu. m)	Vavail (cu. m)	Discharge Check
2-year Water Level	53.5	0.05	0.7	0.1	1.4	0.0

Subdrainage Area: BLDG8 — Roof
Area (ha): 0.009 — Maximum Storage Depth: 150 mm
C: 0.90

tc (min)	I (2 yr) (mm/hr)	Qactual (L/s)	Qrelease (L/s)	Qstored (L/s)	Vstored (m^3)	Depth (mm)	
10	76.81	1.6	0.8	0.8	**0.5**	80.6	0.00
20	52.03	1.1	0.8	0.3	0.4	75.3	0.00
30	40.04	0.9	0.7	0.1	0.2	63.2	0.00
40	32.86	0.7	0.6	0.1	0.1	52.1	0.00
50	28.04	0.6	0.6	0.0	0.1	44.9	0.00
60	24.56	0.5	0.5	0.0	0.1	39.8	0.00
70	21.91	0.5	0.5	0.0	0.1	35.9	0.00
80	19.83	0.4	0.4	0.0	0.0	32.7	0.00
90	18.14	0.4	0.4	0.0	0.0	30.1	0.00
100	16.75	0.4	0.4	0.0	0.0	27.9	0.00
110	15.57	0.3	0.3	0.0	0.0	26.0	0.00
120	14.56	0.3	0.3	0.0	0.0	24.4	0.00

Storage: Roof Storage

	Depth (mm)	Head (m)	Discharge (L/s)	Vreq (cu. m)	Vavail (cu. m)	Discharge Check
2-year Water Level	80.6	0.08	0.8	0.5	3.0	0.0

Subdrainage Area: BLDG7 — Roof
Area (ha): 0.009 — Maximum Storage Depth: 150 mm
C: 0.90

tc (min)	I (2 yr) (mm/hr)	Qactual (L/s)	Qrelease (L/s)	Qstored (L/s)	Vstored (m^3)	Depth (mm)	
10	76.81	1.6	0.8	0.8	**0.5**	80.6	0.00
20	52.03	1.1	0.8	0.3	0.4	75.3	0.00
30	40.04	0.9	0.7	0.1	0.2	63.2	0.00
40	32.86	0.7	0.6	0.1	0.1	52.1	0.00
50	28.04	0.6	0.6	0.0	0.1	44.9	0.00
60	24.56	0.5	0.5	0.0	0.1	39.8	0.00
70	21.91	0.5	0.5	0.0	0.1	35.9	0.00
80	19.83	0.4	0.4	0.0	0.0	32.7	0.00
90	18.14	0.4	0.4	0.0	0.0	30.1	0.00
100	16.75	0.4	0.4	0.0	0.0	27.9	0.00
110	15.57	0.3	0.3	0.0	0.0	26.0	0.00
120	14.56	0.3	0.3	0.0	0.0	24.4	0.00

Storage: Roof Storage

	Depth (mm)	Head (m)	Discharge (L/s)	Vreq (cu. m)	Vavail (cu. m)	Discharge Check
2-year Water Level	80.6	0.08	0.8	0.5	3.0	0.0

Project #160401329, 851 RICHMOND ROAD
Modified Rational Method Calculatons for Storage

tc (min)	I (100 yr) (mm/hr)	Qactual (L/s)	Qrelease (L/s)	Qstored (L/s)	Vstored (m^3)
10	178.56	34.7	34.7		
20	119.95	23.3	23.3		
30	91.87	17.9	17.9		
40	75.15	14.6	14.6		
50	63.95	12.4	12.4		
60	55.89	10.9	10.9		
70	49.79	9.7	9.7		
80	44.99	8.8	8.8		
90	41.11	8.0	8.0		
100	37.90	7.4	7.4		
110	35.20	6.9	6.9		
120	32.89	6.4	6.4		

Subdrainage Area: RAMP — Uncontrolled - Tributary
Area (ha): 0.02
C: 0.98

tc (min)	I (100 yr) (mm/hr)	Qactual (L/s)	Qrelease (L/s)	Qstored (L/s)	Vstored (m^3)
10	178.56	9.7	9.7		
20	119.95	6.5	6.5		
30	91.87	5.0	5.0		
40	75.15	4.1	4.1		
50	63.95	3.5	3.5		
60	55.89	3.0	3.0		
70	49.79	2.7	2.7		
80	44.99	2.4	2.4		
90	41.11	2.2	2.2		
100	37.90	2.1	2.1		
110	35.20	1.9	1.9		
120	32.89	1.8	1.8		

Subdrainage Area: BLDG9 — Roof
Area (ha): 0.004 — Maximum Storage Depth: 150 mm
C: 1.00

tc (min)	I (100 yr) (mm/hr)	Qactual (L/s)	Qrelease (L/s)	Qstored (L/s)	Vstored (m^3)	Depth (mm)	
10	178.56	2.0	1.0	1.0	**0.6**	110.6	0.00
20	119.95	1.3	1.0	0.4	0.4	102.1	0.00
30	91.87	1.0	0.9	0.2	0.3	86.7	0.00
40	75.15	0.8	0.8	0.1	0.2	71.9	0.00
50	63.95	0.7	0.7	0.0	0.1	58.0	0.00
60	55.89	0.6	0.6	0.0	0.0	48.2	0.00
70	49.79	0.6	0.5	0.0	0.0	43.1	0.00
80	44.99	0.5	0.5	0.0	0.0	39.1	0.00
90	41.11	0.5	0.5	0.0	0.0	35.8	0.00
100	37.90	0.4	0.4	0.0	0.0	33.1	0.00
110	35.20	0.4	0.4	0.0	0.0	30.8	0.00
120	32.89	0.4	0.4	0.0	0.0	28.8	0.00

Storage: Roof Storage

	Depth (mm)	Head (m)	Discharge (L/s)	Vreq (cu. m)	Vavail (cu. m)	Discharge Check
100-year Water Level	110.6	0.11	1.0	0.6	1.4	0.0

Subdrainage Area: BLDG8 — Roof
Area (ha): 0.009 — Maximum Storage Depth: 150 mm
C: 1.00

tc (min)	I (100 yr) (mm/hr)	Qactual (L/s)	Qrelease (L/s)	Qstored (L/s)	Vstored (m^3)	Depth (mm)	
10	178.56	4.2	1.1	3.1	1.9	127.7	0.00
20	119.95	2.8	1.1	1.7	**2.0**	131.1	0.00
30	91.87	2.2	1.1	1.0	1.9	128.2	0.00
40	75.15	1.8	1.1	0.7	1.6	122.7	0.00
50	63.95	1.5	1.0	0.5	1.4	115.5	0.00
60	55.89	1.3	1.0	0.3	1.2	108.3	0.00
70	49.79	1.2	1.0	0.2	0.9	101.4	0.00
80	44.99	1.1	0.9	0.2	0.8	93.7	0.00
90	41.11	1.0	0.9	0.1	0.6	86.3	0.00
100	37.90	0.9	0.8	0.1	0.5	79.6	0.00
110	35.20	0.8	0.8	0.1	0.4	73.4	0.00
120	32.89	0.8	0.7	0.0	0.3	66.9	0.00

Storage: Roof Storage

	Depth (mm)	Head (m)	Discharge (L/s)	Vreq (cu. m)	Vavail (cu. m)	Discharge Check
100-year Water Level	131.1	0.13	1.1	2.0	3.0	0.0

Subdrainage Area: BLDG7 — Roof
Area (ha): 0.009 — Maximum Storage Depth: 150 mm
C: 1.00

tc (min)	I (100 yr) (mm/hr)	Qactual (L/s)	Qrelease (L/s)	Qstored (L/s)	Vstored (m^3)	Depth (mm)	
10	178.56	4.2	1.1	3.1	1.9	127.7	0.00
20	119.95	2.8	1.1	1.7	**2.0**	131.1	0.00
30	91.87	2.2	1.1	1.0	1.9	128.2	0.00
40	75.15	1.8	1.1	0.7	1.6	122.7	0.00
50	63.95	1.5	1.0	0.5	1.4	115.5	0.00
60	55.89	1.3	1.0	0.3	1.2	108.3	0.00
70	49.79	1.2	1.0	0.2	0.9	101.4	0.00
80	44.99	1.1	0.9	0.2	0.8	93.7	0.00
90	41.11	1.0	0.9	0.1	0.6	86.3	0.00
100	37.90	0.9	0.8	0.1	0.5	79.6	0.00
110	35.20	0.8	0.8	0.1	0.4	73.4	0.00
120	32.89	0.8	0.7	0.0	0.3	66.9	0.00

Storage: Roof Storage

	Depth (mm)	Head (m)	Discharge (L/s)	Vreq (cu. m)	Vavail (cu. m)	Discharge Check
100-year Water Level	131.1	0.13	1.1	2.0	3.0	0.0

Stormwater Management Calculations

Project #160401329, 851 RICHMOND ROAD
Modified Rational Method Calculatons for Storage

Subdrainage Area: BLDG6 — Roof
Area (ha): 0.020 — Maximum Storage Depth: 150 mm
C: 0.90

tc (min)	I (2 yr) (mm/hr)	Qactual (L/s)	Qrelease (L/s)	Qstored (L/s)	Vstored (m^3)	Depth (mm)	
10	76.81	3.9	0.9	3.0	1.8	93.7	0.00
20	52.03	2.7	0.9	1.7	**2.1**	98.9	0.00
30	40.04	2.0	0.9	1.1	2.0	97.8	0.00
40	32.86	1.7	0.9	0.8	1.8	94.4	0.00
50	28.04	1.4	0.9	0.5	1.6	90.3	0.00
60	24.56	1.3	0.9	0.4	1.4	85.9	0.00
70	21.91	1.1	0.8	0.3	1.2	81.5	0.00
80	19.83	1.0	0.8	0.2	1.0	77.3	0.00
90	18.14	0.9	0.8	0.2	0.8	72.5	0.00
100	16.75	0.9	0.7	0.1	0.7	67.1	0.00
110	15.57	0.8	0.7	0.1	0.6	62.2	0.00
120	14.56	0.7	0.7	0.1	0.5	57.7	0.00

Storage: Roof Storage

	Depth (mm)	Head (m)	Discharge (L/s)	Vreq (cu. m)	Vavail (cu. m)	Discharge Check
2-year Water Level	98.9	0.10	0.9	2.1	7.1	0.0

Subdrainage Area: BLDG5 — Roof
Area (ha): 0.017 — Maximum Storage Depth: 150 mm
C: 0.90

tc (min)	I (2 yr) (mm/hr)	Qactual (L/s)	Qrelease (L/s)	Qstored (L/s)	Vstored (m^3)	Depth (mm)	
10	76.81	3.2	0.9	2.3	1.4	91.3	0.00
20	52.03	2.1	0.9	1.2	**1.5**	94.3	0.00
30	40.04	1.7	0.9	0.8	1.4	91.4	0.00
40	32.86	1.4	0.9	0.5	1.2	86.7	0.00
50	28.04	1.2	0.8	0.3	1.0	81.6	0.00
60	24.56	1.0	0.8	0.2	0.8	76.4	0.00
70	21.91	0.9	0.8	0.1	0.6	70.0	0.00
80	19.83	0.8	0.7	0.1	0.5	63.6	0.00
90	18.14	0.7	0.7	0.1	0.4	57.9	0.00
100	16.75	0.7	0.6	0.0	0.3	52.5	0.00
110	15.57	0.6	0.6	0.0	0.2	48.5	0.00
120	14.56	0.6	0.6	0.0	0.2	45.6	0.00

Storage: Roof Storage

	Depth (mm)	Head (m)	Discharge (L/s)	Vreq (cu. m)	Vavail (cu. m)	Discharge Check
2-year Water Level	94.3	0.09	0.9	1.5	5.8	0.0

Subdrainage Area: BLDG4 — Roof
Area (ha): 0.015 — Maximum Storage Depth: 150 mm
C: 0.90

tc (min)	I (2 yr) (mm/hr)	Qactual (L/s)	Qrelease (L/s)	Qstored (L/s)	Vstored (m^3)	Depth (mm)	
10	76.81	2.9	0.9	2.0	1.2	90.0	0.00
20	52.03	1.9	0.9	1.0	**1.3**	91.8	0.00
30	40.04	1.5	0.9	0.6	1.1	88.1	0.00
40	32.86	1.2	0.8	0.4	0.9	82.8	0.00
50	28.04	1.0	0.8	0.2	0.7	77.2	0.00
60	24.56	0.9	0.8	0.2	0.6	70.2	0.00
70	21.91	0.8	0.7	0.1	0.4	63.1	0.00
80	19.83	0.7	0.7	0.1	0.3	56.7	0.00
90	18.14	0.7	0.6	0.0	0.2	51.0	0.00
100	16.75	0.6	0.6	0.0	0.2	47.2	0.00
110	15.57	0.6	0.6	0.0	0.2	44.2	0.00
120	14.56	0.5	0.5	0.0	0.1	41.5	0.00

Storage: Roof Storage

	Depth (mm)	Head (m)	Discharge (L/s)	Vreq (cu. m)	Vavail (cu. m)	Discharge Check
2-year Water Level	91.8	0.09	0.9	1.3	5.2	0.0

Subdrainage Area: BLDG3 — Roof
Area (ha): 0.013 — Maximum Storage Depth: 150 mm
C: 0.90

tc (min)	I (2 yr) (mm/hr)	Qactual (L/s)	Qrelease (L/s)	Qstored (L/s)	Vstored (m^3)	Depth (mm)	
10	76.81	2.4	0.9	1.6	**0.9**	87.7	0.00
20	52.03	1.7	0.9	0.8	0.9	87.7	0.00
30	40.04	1.3	0.8	0.4	0.8	82.5	0.00
40	32.86	1.0	0.8	0.2	0.6	76.3	0.00
50	28.04	0.9	0.7	0.1	0.4	67.8	0.00
60	24.56	0.8	0.7	0.1	0.3	59.7	0.00
70	21.91	0.7	0.6	0.0	0.2	52.6	0.00
80	19.83	0.6	0.6	0.0	0.1	47.5	0.00
90	18.14	0.6	0.6	0.0	0.1	43.8	0.00
100	16.75	0.5	0.5	0.0	0.1	40.7	0.00
110	15.57	0.5	0.5	0.0	0.1	38.1	0.00
120	14.56	0.5	0.5	0.0	0.1	35.8	0.00

Storage: Roof Storage

	Depth (mm)	Head (m)	Discharge (L/s)	Vreq (cu. m)	Vavail (cu. m)	Discharge Check
2-year Water Level	87.7	0.09	0.9	0.9	4.4	0.0

Subdrainage Area: BLDG2 — Roof
Area (ha): 0.013 — Maximum Storage Depth: 150 mm
C: 0.90

tc (min)	I (2 yr) (mm/hr)	Qactual (L/s)	Qrelease (L/s)	Qstored (L/s)	Vstored (m^3)	Depth (mm)	
10	76.81	2.5	0.9	1.6	1.0	87.8	0.00

Project #160401329, 851 RICHMOND ROAD
Modified Rational Method Calculatons for Storage

Subdrainage Area: BLDG6 — Roof
Area (ha): 0.020 — Maximum Storage Depth: 150 mm
C: 1.00

tc (min)	I (100 yr) (mm/hr)	Qactual (L/s)	Qrelease (L/s)	Qstored (L/s)	Vstored (m^3)	Depth (mm)	
10	178.56	10.1	1.2	9.0	5.4	135.3	0.00
20	119.95	6.8	1.2	5.6	6.7	146.2	0.00
30	91.87	5.2	1.3	4.0	7.1	149.8	0.00
40	75.15	4.3	1.3	3.0	**7.2**	150.5	0.00
50	63.95	3.6	1.3	2.4	7.1	149.8	0.00
60	55.89	3.2	1.2	1.9	6.9	148.2	0.00
70	49.79	2.8	1.2	1.6	6.7	146.0	0.00
80	44.99	2.6	1.2	1.3	6.4	143.7	0.00
90	41.11	2.3	1.2	1.1	6.1	141.2	0.00
100	37.90	2.1	1.2	1.0	5.8	138.5	0.00
110	35.20	2.0	1.2	0.8	5.4	135.9	0.00
120	32.89	1.9	1.2	0.7	5.1	133.1	0.00

Storage: Roof Storage

	Depth (mm)	Head (m)	Discharge (L/s)	Vreq (cu. m)	Vavail (cu. m)	Discharge Check
100-year Water Level	150.5	0.15	1.3	7.2	7.1	0.1

Subdrainage Area: BLDG5 — Roof
Area (ha): 0.017 — Maximum Storage Depth: 150 mm
C: 1.00

tc (min)	I (100 yr) (mm/hr)	Qactual (L/s)	Qrelease (L/s)	Qstored (L/s)	Vstored (m^3)	Depth (mm)	
10	178.56	8.2	1.2	7.0	4.2	134.0	0.00
20	119.95	5.5	1.2	4.3	5.1	143.5	0.00
30	91.87	4.2	1.2	3.0	**5.4**	145.8	0.00
40	75.15	3.4	1.2	2.2	5.3	145.3	0.00
50	63.95	2.9	1.2	1.7	5.1	143.5	0.00
60	55.89	2.6	1.2	1.4	4.9	140.9	0.00
70	49.79	2.3	1.2	1.1	4.6	138.0	0.00
80	44.99	2.1	1.2	0.9	4.3	134.9	0.00
90	41.11	1.9	1.1	0.7	4.0	131.7	0.00
100	37.90	1.7	1.1	0.6	3.7	128.4	0.00
110	35.20	1.6	1.1	0.5	3.4	125.2	0.00
120	32.89	1.5	1.1	0.4	3.1	121.1	0.00

Storage: Roof Storage

	Depth (mm)	Head (m)	Discharge (L/s)	Vreq (cu. m)	Vavail (cu. m)	Discharge Check
100-year Water Level	145.8	0.15	1.2	5.4	5.8	0.0

Subdrainage Area: BLDG4 — Roof
Area (ha): 0.015 — Maximum Storage Depth: 150 mm
C: 1.00

tc (min)	I (100 yr) (mm/hr)	Qactual (L/s)	Qrelease (L/s)	Qstored (L/s)	Vstored (m^3)	Depth (mm)	
10	178.56	7.4	1.2	6.2	3.7	133.3	0.00
20	119.95	5.0	1.2	3.8	4.5	142.0	0.00
30	91.87	3.8	1.2	2.6	**4.7**	143.6	0.00
40	75.15	3.1	1.2	1.9	4.6	142.5	0.00
50	63.95	2.6	1.2	1.4	4.3	140.1	0.00
60	55.89	2.3	1.2	1.1	4.1	137.1	0.00
70	49.79	2.1	1.2	0.9	3.8	133.8	0.00
80	44.99	1.9	1.1	0.7	3.5	130.3	0.00
90	41.11	1.7	1.1	0.6	3.2	126.8	0.00
100	37.90	1.6	1.1	0.5	2.9	122.7	0.00
110	35.20	1.5	1.1	0.4	2.6	118.3	0.00
120	32.89	1.4	1.0	0.3	2.4	114.0	0.00

Storage: Roof Storage

	Depth (mm)	Head (m)	Discharge (L/s)	Vreq (cu. m)	Vavail (cu. m)	Discharge Check
100-year Water Level	143.6	0.14	1.2	4.7	5.2	0.0

Subdrainage Area: BLDG3 — Roof
Area (ha): 0.013 — Maximum Storage Depth: 150 mm
C: 1.00

tc (min)	I (100 yr) (mm/hr)	Qactual (L/s)	Qrelease (L/s)	Qstored (L/s)	Vstored (m^3)	Depth (mm)	
10	178.56	6.3	1.1	5.2	3.1	132.0	0.00
20	119.95	4.2	1.2	3.0	3.6	139.4	0.00
30	91.87	3.2	1.2	2.0	**3.7**	139.8	0.00
40	75.15	2.7	1.2	1.5	3.5	137.7	0.00
50	63.95	2.3	1.2	1.1	3.3	134.5	0.00
60	55.89	2.0	1.1	0.8	3.0	130.7	0.00
70	49.79	1.8	1.1	0.6	2.7	126.7	0.00
80	44.99	1.6	1.1	0.5	2.4	122.0	0.00
90	41.11	1.5	1.1	0.4	2.2	116.7	0.00
100	37.90	1.3	1.0	0.3	1.9	111.7	0.00
110	35.20	1.2	1.0	0.3	1.7	107.0	0.00
120	32.89	1.2	1.0	0.2	1.4	102.4	0.00

Storage: Roof Storage

	Depth (mm)	Head (m)	Discharge (L/s)	Vreq (cu. m)	Vavail (cu. m)	Discharge Check
100-year Water Level	139.8	0.14	1.2	3.7	4.4	0.0

Subdrainage Area: BLDG2 — Roof
Area (ha): 0.013 — Maximum Storage Depth: 150 mm
C: 1.00

tc (min)	I (100 yr) (mm/hr)	Qactual (L/s)	Qrelease (L/s)	Qstored (L/s)	Vstored (m^3)	Depth (mm)	
10	178.56	6.4	1.1	5.2	3.1	132.0	0.00

Stormwater Management Calculations

Project #160401329, 851 RICHMOND ROAD
Modified Rational Method Calculatons for Storage

20	52.03	1.7	0.9	0.8	**1.0**	87.9	0.00
30	40.04	1.3	0.8	0.4	0.8	82.8	0.00
40	32.86	1.1	0.8	0.3	0.6	76.6	0.00
50	28.04	0.9	0.7	0.2	0.5	68.3	0.00
60	24.56	0.8	0.7	0.1	0.3	60.2	0.00
70	21.91	0.7	0.7	0.1	0.2	53.1	0.00
80	19.83	0.6	0.6	0.0	0.2	47.8	0.00
90	18.14	0.6	0.6	0.0	0.1	44.1	0.00
100	16.75	0.5	0.5	0.0	0.1	41.0	0.00
110	15.57	0.5	0.5	0.0	0.1	38.3	0.00
120	14.56	0.5	0.5	0.0	0.1	36.0	0.00

Storage: Roof Storage

	Depth (mm)	Head (m)	Discharge (L/s)	Vreq (cu. m)	Vavail (cu. m)	Discharge Check
2-year Water Level	87.9	0.09	0.9	1.0	4.5	0.0

Subdrainage Area: BLDG1 — Roof
Area (ha): 0.019 — Maximum Storage Depth: 150 mm
C: 0.90

tc (min)	I (2 yr) (mm/hr)	Qactual (L/s)	Qrelease (L/s)	Qstored (L/s)	Vstored (m^3)	Depth (mm)	
10	76.81	3.6	0.9	2.7	1.6	92.7	0.00
20	52.03	2.4	0.9	1.5	**1.8**	97.0	0.00
30	40.04	1.9	0.9	0.9	1.7	95.0	0.00
40	32.86	1.5	0.9	0.6	1.5	91.1	0.00
50	28.04	1.3	0.9	0.4	1.3	86.6	0.00
60	24.56	1.1	0.8	0.3	1.1	81.9	0.00
70	21.91	1.0	0.8	0.2	0.9	77.2	0.00
80	19.83	0.9	0.8	0.2	0.7	71.8	0.00
90	18.14	0.8	0.7	0.1	0.6	66.0	0.00
100	16.75	0.8	0.7	0.1	0.5	60.7	0.00
110	15.57	0.7	0.7	0.1	0.4	55.8	0.00
120	14.56	0.7	0.6	0.0	0.3	51.4	0.00

Storage: Roof Storage

	Depth (mm)	Head (m)	Discharge (L/s)	Vreq (cu. m)	Vavail (cu. m)	Discharge Check
2-year Water Level	97.0	0.10	0.9	1.8	6.5	0.0

SUMMARY TO OUTLET

		Vrequired	Vavailable*		
Tributary Area	0.507 ha				
100yr Roof Flow to Sewer	7.7				
100yr Uncontrolled Flow to Sewer	63.5 L/s	0	0 m^3	Ok	
Non-Tributary Area	0.110 ha				
Total 100yr Non-Tributary Flow	14.1 L/s				
Total Area	0.617 ha				
Total 2yr Flow	85.3 L/s				
Target	267.8 L/s				

Project #160401329, 851 RICHMOND ROAD
Modified Rational Method Calculatons for Storage

20	119.95	4.3	1.2	3.1	3.7	139.5	0.00
30	91.87	3.3	1.2	2.1	**3.7**	140.0	0.00
40	75.15	2.7	1.2	1.5	3.6	138.0	0.00
50	63.95	2.3	1.2	1.1	3.3	134.8	0.00
60	55.89	2.0	1.1	0.8	3.0	131.0	0.00
70	49.79	1.8	1.1	0.7	2.7	127.1	0.00
80	44.99	1.6	1.1	0.5	2.5	122.5	0.00
90	41.11	1.5	1.1	0.4	2.2	117.3	0.00
100	37.90	1.3	1.0	0.3	1.9	112.3	0.00
110	35.20	1.3	1.0	0.3	1.7	107.5	0.00
120	32.89	1.2	1.0	0.2	1.5	103.0	0.00

Storage: Roof Storage

	Depth (mm)	Head (m)	Discharge (L/s)	Vreq (cu. m)	Vavail (cu. m)	Discharge Check
100-year Water Level	140.0	0.14	1.2	3.7	4.5	0.0

Subdrainage Area: BLDG1 — Roof
Area (ha): 0.019 — Maximum Storage Depth: 150 mm
C: 1.00

tc (min)	I (100 yr) (mm/hr)	Qactual (L/s)	Qrelease (L/s)	Qstored (L/s)	Vstored (m^3)	Depth (mm)	
10	178.56	9.2	1.2	8.1	4.8	134.8	0.00
20	119.95	6.2	1.2	5.0	6.0	145.0	0.00
30	91.87	4.8	1.2	3.5	6.3	148.1	0.00
40	75.15	3.9	1.3	2.6	**6.3**	148.3	0.00
50	63.95	3.3	1.2	2.1	6.2	147.1	0.00
60	55.89	2.9	1.2	1.7	6.0	145.1	0.00
70	49.79	2.6	1.2	1.4	5.7	142.7	0.00
80	44.99	2.3	1.2	1.1	5.4	140.0	0.00
90	41.11	2.1	1.2	0.9	5.1	137.2	0.00
100	37.90	2.0	1.2	0.8	4.8	134.3	0.00
110	35.20	1.8	1.1	0.7	4.5	131.3	0.00
120	32.89	1.7	1.1	0.6	4.1	128.4	0.00

Storage: Roof Storage

	Depth (mm)	Head (m)	Discharge (L/s)	Vreq (cu. m)	Vavail (cu. m)	Discharge Check
100-year Water Level	148.3	0.15	1.3	6.3	6.5	0.0

SUMMARY TO OUTLET

		Vrequired	Vavailable*		
Tributary Area	0.507 ha				
100yr Roof Flow to Sewer	10.7 L/s				
100yr Uncontrolled Flow to Sewer	179.8 L/s	0	0 m^3	Ok	
Non-Tributary Area	0.110 ha				
Total 100yr Non-Tributary Flow	41.0 L/s				
Total Area	0.617 ha				
Total 100yr Flow	231.4 L/s				
Target	267.8 L/s				

Brief Stormceptor Sizing Report - 851 Richmond Road

Project Information & Location			
Project Name	851 Richmond Road	**Project Number**	160401329
City	Ottawa	**State/ Province**	Ontario
Country	Canada	**Date**	6/29/2018
Designer Information		**EOR Information (optional)**	
Name	Neal Cody	**Name**	
Company	Stantec Consulting Ltd.	**Company**	
Phone #	780-969-3263	**Phone #**	
Email	neal.cody@stantec.com	**Email**	

Stormwater Treatment Recommendation

The recommended Stormceptor Model(s) which achieve or exceed the user defined water quality objective for each site within the project are listed in the below Sizing Summary table.

Site Name	851 Richmond Road
Target TSS Removal (%)	80
TSS Removal (%) Provided	81
Recommended Stormceptor Model	STC 750

The recommended Stormceptor Model achieves the water quality objectives based on the selected inputs, historical rainfall records and selected particle size distribution.

Stormceptor Sizing Summary	
Stormceptor Model	**% TSS Removal Provided**
STC 300	72
STC 750	81
STC 1000	82
STC 1500	83
STC 2000	86
STC 3000	87
STC 4000	90
STC 5000	90
STC 6000	92
STC 9000	94
STC 10000	94
STC 14000	96
StormceptorMAX	Custom

Sizing Details

Drainage Area	
Total Area (ha)	0.50
Imperviousness %	85.7

Rainfall	
Station Name	OTTAWA MACDONALD-CARTIER INT'L A
State/Province	Ontario
Station ID #	6000
Years of Records	37
Latitude	45°19'N
Longitude	75°40'W

Water Quality Objective	
TSS Removal (%)	80.0
Runoff Volume Capture (%)	
Oil Spill Capture Volume (L)	
Peak Conveyed Flow Rate (L/s)	
Water Quality Flow Rate (L/s)	

Up Stream Storage	
Storage (ha-m)	Discharge (cms)
0.000	0.000

Up Stream Flow Diversion	
Max. Flow to Stormceptor (cms)	

Particle Size Distribution (PSD)
The selected PSD defines TSS removal

Fine Distribution		
Particle Diameter (microns)	Distribution %	Specific Gravity
20.0	20.0	1.30
60.0	20.0	1.80
150.0	20.0	2.20
400.0	20.0	2.65
2000.0	20.0	2.65

Notes

• Stormceptor performance estimates are based on simulations using PCSWMM for Stormceptor, which uses the EPA Rainfall and Runoff modules.
• Design estimates listed are only representative of specific project requirements based on total suspended solids (TSS) removal defined by the selected PSD, and based on stable site conditions only, after construction is completed.
• For submerged applications or sites specific to spill control, please contact your local Stormceptor representative for further design assistance.

For Stormceptor Specifications and Drawings Please Visit:
http://www.imbriumsystems.com/technical-specifications

DRAWING NOT TO BE USED FOR CONSTRUCTION

THE STORMCEPTOR SYSTEM IS PROTECTED BY ONE OR MORE OF THE FOLLOWING PATENTS:
United States Patent No. 5,753,115 • 5,849,181 • 6,068,765 • 6,371,690 • 7,582,216 • 7,666,303 | Australia Patent No. 729,096 • 779,401 • 2008,279,378 • 2008,288,900 |
Canadian Patent No. 2,206,338 • 2,327,768 • 2,694,159 • 2,697,287 | European Paten No. EP 2,176,171 | Indonesian Patent No. 0,007,058 | Japan Patent No. 3,581,233 • 9-11476 • 5,555,160 |
Korea Patent No. 10-1451593 • 0519,212 | Malaysia Patent No. 118,987 | New Zealand Patent No. 314,646 • 583,583 • 583,008 | South African Patent No. 2010,00683 • 2010,01796 |

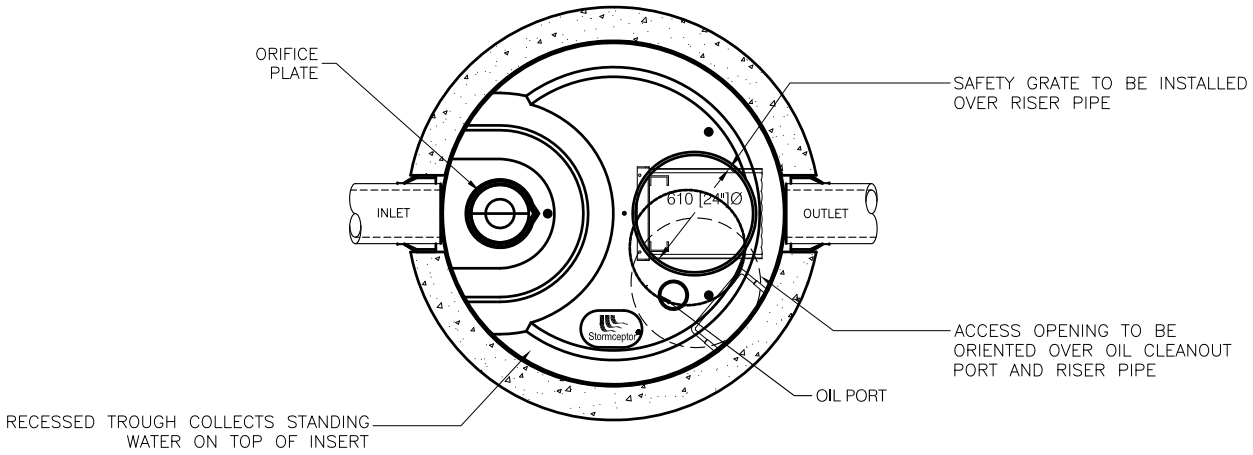

PLAN VIEW

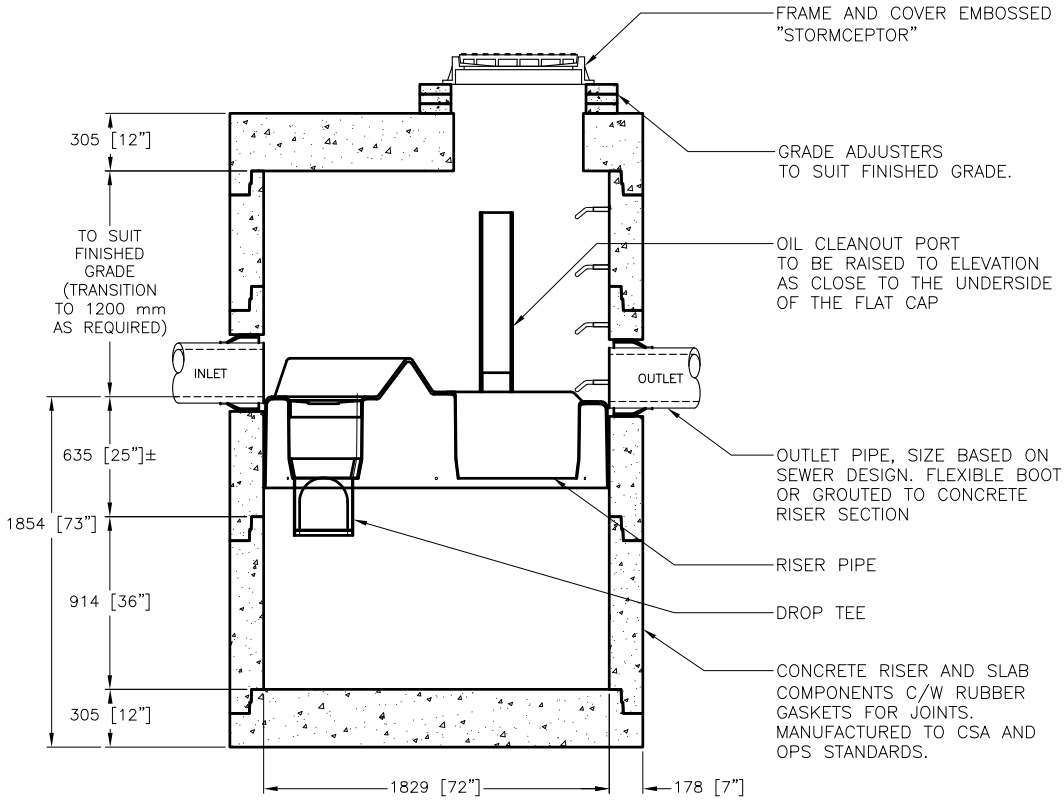

SECTION VIEW

Stormceptor®

THE DESIGN AND INFORMATION SHOWN ON THIS DRAWING IS PROVIDED AS A SERVICE TO THE PROJECT OWNER, ENGINEER AND CONTRACTOR BY IMBRIUM SYSTEMS ("IMBRIUM"). NEITHER THIS DRAWING, NOR ANY PART THEREOF, MAY BE USED, REPRODUCED OR MODIFIED IN ANY MANNER WITHOUT THE PRIOR WRITTEN CONSENT OF IMBRIUM. FAILURE TO COMPLY IS DONE AT THE USER'S OWN RISK AND IMBRIUM EXPRESSLY DISCLAIMS ANY LIABILITY OR RESPONSIBILITY FOR SUCH USE. IF DISCREPANCIES BETWEEN THE SUPPLIED INFORMATION UPON WHICH THE DRAWING IS BASED AND ACTUAL FIELD CONDITIONS ARE ENCOUNTERED AS SITE WORK PROGRESSES, THESE DISCREPANCIES MUST BE REPORTED TO IMBRIUM IMMEDIATELY FOR RE-EVALUATION OF THE DESIGN. IMBRIUM ACCEPTS NO LIABILITY FOR DESIGNS BASED ON MISSING, INCOMPLETE OR INACCURATE INFORMATION SUPPLIED BY OTHERS.

imbrium
WWW.IMBRIUMSYSTEMS.COM
7037 RIDGE ROAD SUITE 350, HANOVER, MD 21076
USA 888-279-8826 CA 800-565-4801 INTL +1-416-960-9900

STC 750
STANDARD MODEL
####

REV #	DATE	REVISION DESCRIPTION	BY

SHEET NUMBER 1 OF 1

DATE:######## | SCALE: 40 | PROJECT No.: ##### | DRAWN: ### | CHECKED: ###

\\AD.CONTECH-CPI.COM\ROOT\CORPORATE\MARKETING\IMBRIUM\CAD & PDF\STORMCEPTOR\CANADIAN\STC 750.DWG 8/8/2016 9:21 AM

STORMWATER MANAGEMENT REPORT
RIVER PARKWAY PRESCHOOL CENTRE

40 CLEARY AVENUE

CITY OF OTTAWA

August 2006
Revised January 2007

Prepared for:

RIVER PARKWAY PRESCHOOL CENTRE
30 Cleary Avenue
Ottawa, Ontario
K2A 3Z9

Prepared by:

J.L. RICHARDS & ASSOCIATES LIMITED
Consulting Engineers, Architects & Planners
864 Lady Ellen Place
Ottawa, Ontario
K1Z 5M2

JLR 19616-05

STORMWATER MANAGEMENT REPORT
RIVER PARKWAY PRESCHOOL CENTRE
40 CLEARY AVENUE
CITY OF OTTAWA

- TABLE OF CONTENTS -

1.0 INTRODUCTION .....

2.0 STORM DESIGN CRITERIA .....

3.0 PROPOSED STORM SEWER SERVICING .....
- 3.1 Water Quantity .....
- 3.2 Erosion and Sedimentation Control Measures .....

4.0 SUMMARY .....

- LIST OF APPENDICES -

APPENDIX 'A' Stormwater Management Calculations, Drainage Area Plan D-ST1 and Ponding Area Plan SWM-1

APPENDIX 'B' Storm Sewer Design Sheet and Site Servicing Plan S1

APPENDIX 'C' Hydrovex® Curves

1.0 INTRODUCTION

J.L. Richards & Associates Limited has been retained to develop a Site Servicing and Grading Plan for a preschool, known as the River Parkway Preschool Centre (RPPC) that will be situated in the southwest quadrant of the First Unitarian Congregation of Ottawa property at 40 Cleary Avenue. The proposed five classroom preschool will be a one-storey slab on grade structure with a sloped roof, and have an approximate building area of 1070m^2. The site currently drains to an existing swale located north of the proposed building site.

2.0 STORM DESIGN CRITERIA

The storm flows generated by the development are to be captured and conveyed to the existing 450 mm diameter storm sewer on Cleary Avenue. The City of Ottawa requires that the post-development peak flow rate be controlled to a 5-year flow with a runoff coefficient of 0.4 and a time of concentration of 20 minutes. Based on the City of Ottawa criteria, the post-development peak flow rate was calculated to be 37.5 L/s (refer to Appendix 'A' for Stormwater Management Calculations). There are two areas of the proposed site that will flow unrestricted to an existing swale within the First Unitarian Congregation of Ottawa property. The two unrestricted areas are located at the south side of the proposed building (Sub-Catchment Area A) and the southwest corner of the property (Sub-Catchment Area B); the 100-year unrestricted flows are 12.7 L/s and 6.0 L/s, respectively. The unrestricted flows have been removed from the post-development peak flow rate and, therefore, the allowable release rate to the existing 450 mm diameter storm sewer is 18.8 L/s.

In addition to controlling the flow from the site to the 5-year allowable release rate, the City of Ottawa also requires that the 5-year and 100-year post-development flows be detained on site, with an allowable depth of ponding to a maximum of 150 mm and 300 mm, respectively. To fulfil the storm design criteria, an Inlet Control Device (ICD), combined with on-site storage, has been incorporated into the storm servicing of the site.

3.0 PROPOSED STORM SEWER SERVICING

3.1 Water Quantity

The River Parkway Preschool Centre will be developed with a mix of surfaces, including rooftop, parking and play areas, as well as landscaped areas (refer to Appendix 'A' for the Drainage Area Plan D-ST1). As a result, the overall imperviousness of the site will increase under post-development conditions. Stormwater management measures will be employed to ensure that the 1:5 year and 1:100 year peak flows conveyed to the local storm sewer do not exceed the allowable flow rate of 18.8 L/s.

The storm flows generated by this development are to be captured and conveyed by the proposed storm sewers within the parking lot of the Preschool Centre to the existing 450 mm diameter storm sewer on Cleary Avenue (refer to Appendix 'B' for Site Servicing Plan S1). The existing 450 mm diameter storm sewer flows east to an existing 1500 mm diameter storm sewer on Cleary Avenue.

The proposed storm sewers for this site were sized using the Rational Method with an inlet time of 10 minutes. A 5-year unrestricted flow of 50 L/s was calculated (refer to Appendix 'B' for the Storm Sewer Design Sheet). Since this flow exceeds the maximum allowable flow rate of 18.8 L/s, the storm sewer flows will be restricted using an ICD. It is proposed to utilize a Hydrovex® 125 VHV-2 ICD in the downstream catch basin manhole (CB MH3) in order to limit the rate of flow to a maximum allowable release rate of 18.0 L/s, based on a maximum head of 3.15 metres (refer to Appendix 'C' for the Hydrovex® curves).

The site was also designed to accommodate on-site storage to detain the 5-year and 100-year peak flow rates, while releasing to the maximum allowable release rate. The roof of the RPPC will be sloped and, therefore, rooftop storage has not been incorporated into the design. All downspouts outlet to the surface, with the exception of those along the west side of the building which flow to a subsurface rainwater leader and are conveyed by a storm sewer to the controlled system. All on-site storage will be contained within the parking lot, sewers and catch basins. The 5-year and 100-year storage volumes required are 28.1 m^3 and 65.1 m^3, respectively. The maximum

available 5-year and 100-year storage volumes are 32.2 m^3 and 67.1 m^3, respectively (refer to Appendix 'A' for the Ponding Plan SWM-1).

There is currently an existing culvert that outlets stormwater from the parking lots of the Lord Richmond apartment building to the southwest quadrant of the First Unitarian Church property. The Lord Richmond stormwater then flows northeast through a series of swales and culverts, within the area of the proposed building, and is ultimately conveyed north along the existing swale. It is proposed to redirect these flows away from the RPPC using a storm sewer and outlet downstream into the existing swale north of the RPPC. The storm sewer that will redirect the stormwater from the Lord Richmond property has been sized for the 100-year storm and a time of concentration of 10 minutes. The storm sewer has also been sized to accommodate the 100-year storm runoff from the adjacent residential development, and Kristy's property located to the west of the site (Sub-Catchment Area B).

The runoff generated by the 100-year storm event on the south side of the building (Sub-Catchment Area A) will flow north along the proposed swale to a storm sewer. This storm sewer has been sized for the 100-year storm event and a time of concentration of 10 minutes. The storm sewer will outlet to an existing swale on the north side of the proposed building. By piping the stormwater runoff via a storm sewer, the First Unitarian Church can continue to utilize the area north of the proposed building for parking.

3.2 Erosion and Sedimentation Control Measures

During construction of the site servicing, appropriate erosion and sediment control measures, as outlined in MNR's "Guidelines on Erosion and Sediment Control for Urban Construction Sites" will be implemented to trap sediment on site. Drawing S1 outlines the proposed sedimentation control measures (refer to Notes 4 and 5).

As a minimum, the following erosion and sedimentation control measures will be provided:

- Supply and install silt fence barrier (per OPSD 219.110) along all property boundaries prior to construction.

- Filter cloth to be placed under all catch basin and manhole covers for temporary sediment control during construction.

- Supply and install a silt fence barrier to enclose all borrow and stockpile areas resulting from topsoil stripping activities or any excavating activities (i.e., exact location to be determined during construction) associated with the construction of the proposed parking lot and site servicing.

Furthermore, if dewatering and pumping operations become necessary, construction of a detention trap will be carried out to detain groundwater and promote settling of sediments.

4.0 SUMMARY

Storm servicing for the proposed Preschool Centre consists of an underground storm sewer collection system located in the parking lot and roadway along Cleary Avenue, which conveys flows east to the existing 450 mm diameter storm sewer on Cleary Avenue.

The downstream catch basin will be equipped with a Hydrovex® ICD, restricting the flows to a maximum of 18.0 L/s and the runoff generated by the 5-year and 100-year storm events will be stored on site within the parking lot, sewers and catch basins.

The existing swale passing through the site, which conveys stormwater from the Lord Richmond apartment building parking lot, will be redirected around the proposed building by way of a storm sewer that outlets to an existing swale.

Prepared by: _____
Kim Doyle, P.Eng.

Reviewed by: _____
Guy Forget, P.Eng.

Total 1:5 year flow:

$$Q = 2.78CIA$$

$$I = \frac{998.071}{(T_c + 6.053)^{0.814}}$$

T_c = 20 mins
I = 70.25 mm/hr
C = 0.400
A = 0.48 ha

Q = 37.5 L/s

100 year unrestricted flow:

Sub-Catchment Area A (South side of the proposed building)

$$Q = 2.78CIA$$

$$I = \frac{998.071}{(T_c + 6.053)^{0.814}}$$

T_c = 20 mins
I = 119.95 mm/hr
C = 0.543
A = 0.07 ha

Q = 12.7 L/s

Sub-Catchment Area B (Southwest Corner of the property)

$$Q = 2.78CIA$$

$$I = \frac{998.071}{(T_c + 6.053)^{0.814}}$$

T_c = 20 mins
I = 119.95 mm/hr
C = 0.200
A = 0.09 ha

Q = 6.0 L/s

1:5 year allowable flow:

Q = 18.8 L/s

APPENDIX 'B'

Storm Sewer Design Sheet and Site Servicing Plan S1

J.L. Richards
ENGINEERS · ARCHITECTS · PLANNERS

J.L. Richards
& Associates Limited
864 Lady Ellen Place
Ottawa, ON Canada
K1Z 5M2
Tel: 613 728 3571
Fax: 613 728 6012

CITY OF OTTAWA

River Parkway Preschool Centre
30 Cleary Avenue
JLR PROJECT No.: 19616-01

Date: January 18, 2007

Designed by: KD
Checked by: PR

Subcatchment Area A: 100 Year IDF Curve
Manning's Coefficient (n) = 0.013

STREET	MANHOLE NUMBER		AREAS (ha)								1:100 YR PEAK FLOW GENERATION					SEWER DATA					
	From	To	0.20	0.30	0.40	0.45	0.50	0.60	0.90	1.00	2.78AR	2.78AR CUMM	Time min	Intens. mm/hr	Peak Flow (l/s)	Dia (mm)	Slope %	Q full (l/s)	V full (m/s)	Length (m)	Flow Time (min)
Swale	DI 1	MH 7	0.04						0.15	0.03	0.48	0.48	10.00	178.56	85.88	375	0.25	91.46	0.80	17.00	0.35
	MH 7	Headwall										0.48	10.35	175.39	84.35	375	0.25	91.46	0.80	12.20	0.25

Subcatchment Area B: 100 Year IDF Curve
Manning's Coefficient (n) = 0.013

STREET	MANHOLE NUMBER		AREAS (ha)								1:100 YR PEAK FLOW GENERATION					SEWER DATA					
	From	To	0.20	0.30	0.40	0.45	0.50	0.60	0.90	1.00	2.78AR	2.78AR CUMM	Time min	Intens. mm/hr	Peak Flow (l/s)	Dia (mm)	Slope %	Q full (l/s)	V full (m/s)	Length (m)	Flow Time (min)
Lord Richmond	CBMH 4	MH 4A	0.09				0.30		0.70		2.22	2.22	10.00	178.56	396.12	525	1.00	448.66	2.01	58.50	0.49
	MH 4A	Headwall										2.22	10.49	174.24	386.54	525	1.00	448.66	2.01	67.50	0.56

J.L. Richards
& Associates Limited
864 Lady Ellen Place
Ottawa, ON Canada
K1Z 5M2
Tel: 613 728 3571
Fax: 613 728 6012

CITY OF OTTAWA

River Parkway Preschool Centre
30 Cleary Avenue
JLR PROJECT No.: 19616-01

Date: January 18, 2007

Designed by: KD
Checked by: PR

Subcatchment Area C: 5 Year IDF Curve
Manning's Coefficient (n) = 0.013

STREET	MANHOLE NUMBER		AREAS (ha)								1:5 YR PEAK FLOW GENERATION					SEWER DATA					
	From	To	0.20	0.30	0.40	0.45	0.50	0.60	0.90	1.00	2.78AR	2.78AR CUMM	Time min	Intens. mm/hr	Peak Flow (l/s)	Dia (mm)	Slope %	Q full (l/s)	V full (m/s)	Length (m)	Flow Time (min)
Roof	roof	CB8								0.04	0.11	0.11	10.00	104.19	11.59	150	2.00	22.47	1.23	31.50	0.43
Rear Yard CB	CB 8	CBMH 9	0.04						0.02		0.07	0.07	10.43	101.99	7.37	200	1.00	34.22	1.06	31.50	0.50
Parking Lot	CBMH 9	CBMH 1	0.03						0.01		0.04	0.15	10.92	99.55	15.22	250	1.50	75.98	1.50	20.70	0.23
Parking Lot	CBMH 1	CBMH 2	0.01						0.04	0.02	0.16	0.31	11.15	98.47	30.93	300	1.00	100.88	1.38	24.50	0.30
Cleary	CBMH 2	CBMH 3	0.04						0.05	0.02	0.20	0.52	11.45	97.11	50.22	300	3.20	180.46	2.47	13.90	0.09
Cleary	CBMH 3	Ex										0.52	11.54	96.69	50.00	375	3.20	327.20	2.87	37.80	0.22

APPENDIX 'C'

Hydrovex® Curves

®Hydrovex®

VHV Vertical Vortex Flow Regulator

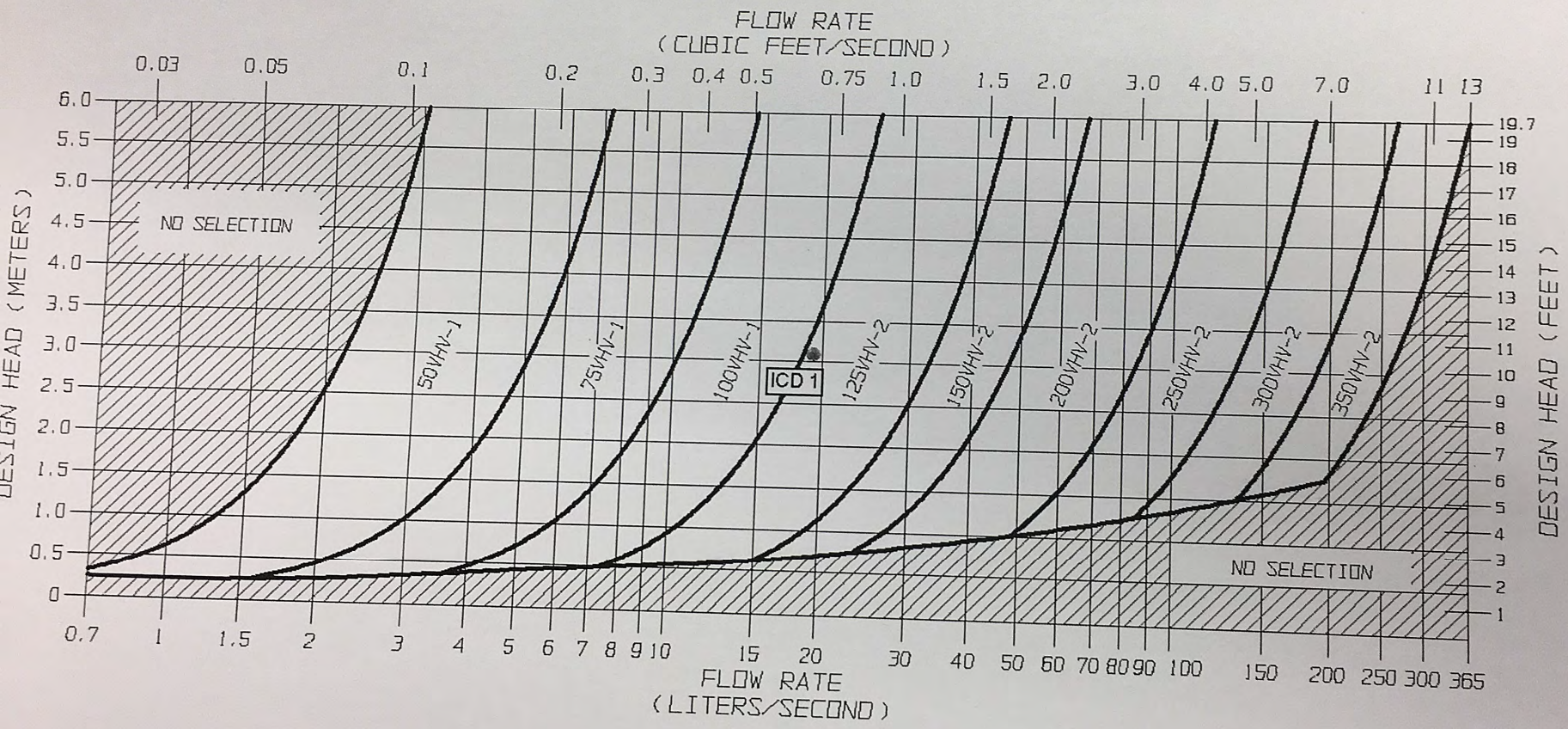

FIGURE 2 - VHV

JOHN MEUNIER INC.

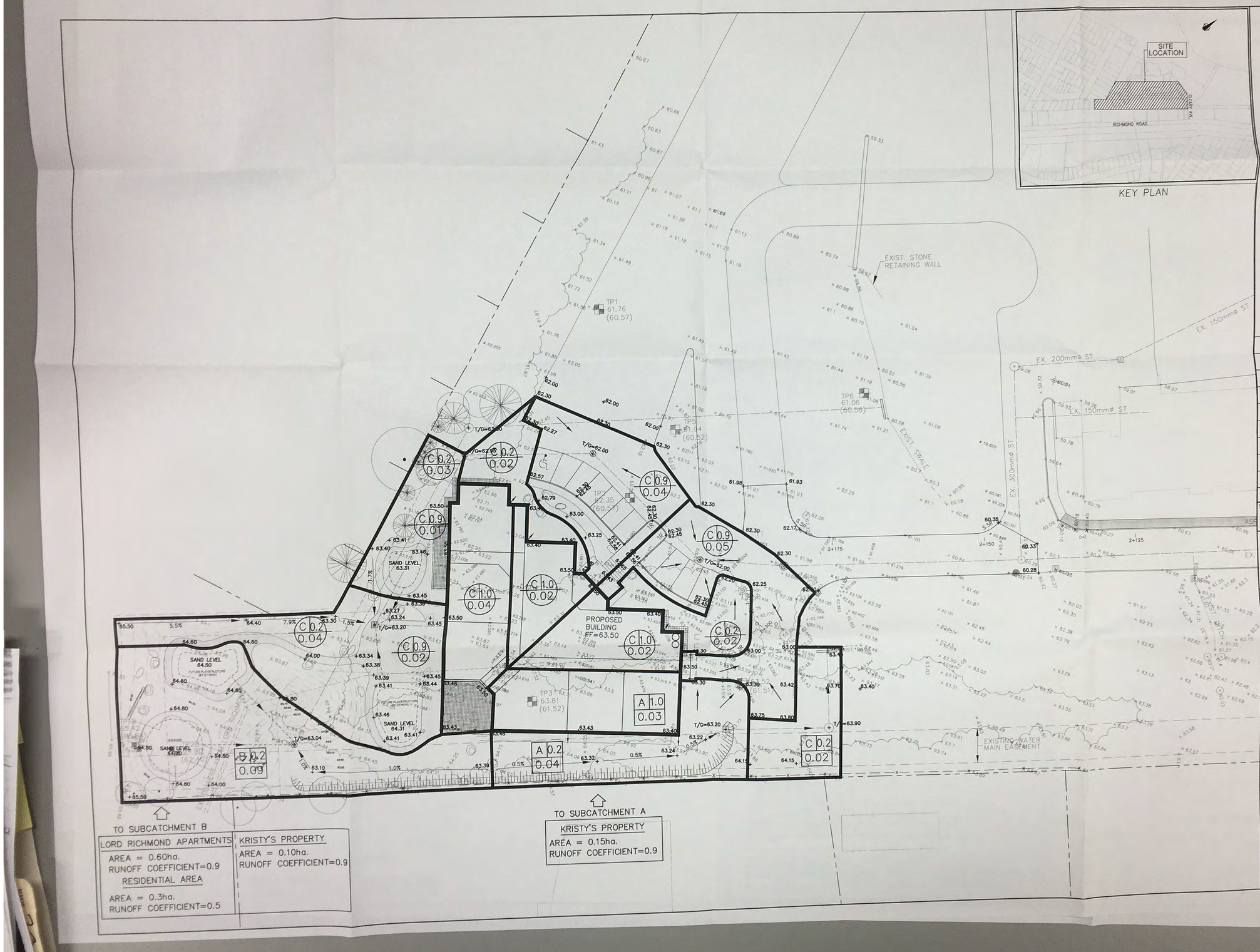
SITE LOCATION
CLEARY AVE
RICHMOND ROAD
KEY PLAN
LEGEND
EXISTING CATCH BASIN
PROPOSED CATCH BASIN
PROPOSED CATCH BASIN / MANHOLE
PROPOSED CATCH BASIN / MANHOLE c/w ICD
HYDRANT & VALVE
SANITARY SEWER AND MANHOLE
STORM SEWER AND MANHOLE
62.30 EXISTING GRADE
62.30 PROPOSED GRADE
3:1 TERRACING
PROPOSED SWALE C/W 250mmø PERFORATED PIPE SUBDRAIN
DRAINAGE BOUNDARY
RESTRICTED SUBCATCHMENT
C 0.2 / 1.0
SUBCATCHMENT AREA
RUNOFF COEFFICIENT
AREA IN HECTARES
UNRESTRICTED SUBCATCHMENT
A 1.0 / 1.0
SUBCATCHMENT AREA
RUNOFF COEFFICIENT
AREA IN HECTARES
EXIST. STONE RETAINING WALL
EX. 200mmø ST
EX. 150mmø ST
EX. 300mmø ST
EXIST. SWALE
EXISTING WATER MAIN EASEMENT
PROPOSED BUILDING FF=63.50
TP1 61.76 (60.57)
TP2 61.35 (60.57)
TP3 63.81 (61.52)
TP4 61.04 (60.52)
TP6 61.06 (60.58)
C 0.2 0.03
C 0.2 0.02
C 0.9 0.04
C 0.9 0.01
C 1.0 0.02
C 1.0 0.04
C 0.9 0.05
C 0.9 0.02
C 0.2 0.04
C 0.2 0.02
B 0.2 0.09
A 1.0 0.03
A 0.2 0.04
C 0.2 0.02
SAND LEVEL 64.50
SAND LEVEL 63.31
SAND LEVEL 64.31
SAND LEVEL 64.00
SWINGS
FUTURE PLAYSTRUCTURE (BY OTHERS)
TO SUBCATCHMENT B
LORD RICHMOND APARTMENTS
AREA = 0.60ha.
RUNOFF COEFFICIENT=0.9
RESIDENTIAL AREA
AREA = 0.3ha.
RUNOFF COEFFICIENT=0.5
KRISTY'S PROPERTY
AREA = 0.10ha.
RUNOFF COEFFICIENT=0.9
TO SUBCATCHMENT A
KRISTY'S PROPERTY
AREA = 0.15ha.
RUNOFF COEFFICIENT=0.9
3 REVISED PER CITY COMMENTS 18/01/07
2 ISSUED FOR SITE PLAN APPROVAL 15/08/06
1 CLIENT REVIEW 07/04/06
NO. ISSUE DATE
SCALE: 1:250
J.L.Richards & Associates Limited
864 Lady Ellen Place
Ottawa, ON Canada
K1Z 5M2
Tel: 613 728 3571
Fax: 613 728 6012
PROFESSIONAL STAMP
PROJECT NORTH
PROJECT:
RIVER PARKWAY PRESCHOOL CENTRE
30 CLEARY AVENUE
Ottawa, Ontario
DRAWING:
STORM DRAINAGE PLAN
DESIGN: K.D
DRAWN: M.F.
CHECKED: G.F.
CAD FILE: 19616-01
PLOTTED: May 04, 2006
DRAWING NO.: D-ST1
J.L.R. JOB NO.: 19616

SITE LOCATION

RICHMOND ROAD

CLEARY AVE

KEY PLAN

LEGEND

- EXISTING CATCH BASIN
- PROPOSED CATCH BASIN
- PROPOSED CATCH BASIN / MANHOLE
- PROPOSED CATCH BASIN / MANHOLE c/w ICD
- PROPOSED WATERMAIN, VALVE & HYDRANT
- EXISTING WATERMAIN, VALVE & HYDRANT
- WATERMAIN VALVE AND VALVE BOX
- EXISTING SANITARY SEWER & MANHOLE
- EXISTING STORM SEWER & MANHOLE
- PROPOSED SANITARY SEWER & MANHOLE
- PROPOSED STORM SEWER & MANHOLE
- PROPOSED CATCH BASIN & LEAD
- HEADWALL
- 62.30 EXISTING GRADE
- 62.30 PRPOSED GRADE

DESIGN STORM	100 YEAR	441	PONDING AREA (m^2)
PONDING DEPTH (m)	0.23	35	PONDING VOLUME (m^3)

3	REVISED PER CITY COMMENTS	18/01/07
2	ISSUED FOR SITE PLAN APPROVAL	15/08/06
1	CLIENT REVIEW	07/04/06
NO.	ISSUE	DATE

SCALE: 1:250

J.L.Richards & Associates Limited
864 Lady Ellen Place
Ottawa, ON Canada
K1Z 5M2
Tel: 613.728.3571
Fax: 613.728.6012
ENGINEERS ARCHITECTS PLANNERS

PROFESSIONAL STAMP

PROJECT NORTH

PROJECT NORTH

PROJECT:

RIVER PARKWAY
PRESCHOOL CENTRE
30 CLEARY AVENUE

Ottawa, Ontario

DRAWING:

PONDING PLAN

DESIGN: K.D	DRAWING NO.: SWM1
DRAWN: M.F.	
CHECKED: G.F.	
CAD FILE: 19616-01	J.L.R JOB NO: 19616
PLOTTED: May 04, 2006	

100 YEAR	300
0.3	30

5 YEAR	186
0.15	9.3

5 YEAR	138
0.15	6.9

100 YEAR	211
0.3	21.1

12.0m SETBACK

TP1 61.76 (60.57)

TP3 63.81 (61.52)

TP5 61.94 (60.52)

TP6 61.06 (60.56)

TP2 (61.51)

PROPOSED BUILDING FF=63.50

EXIST. STONE RETAINING WALL

SAND LEVEL 64.50

SAND LEVEL 63.31

SAND LEVEL 64.31

T/G= 59.28
INV.(N)= 57.47
INV.(E)= 57.45

EX. 200mmø ST

EX. 150mmø ST

EX. 300mmø ST

EX. 152mmø WM

CONNECT TO EXISTING MH1
T/G= 60.29
INV.(W)= 57.32
INV.(N)= 57.21

CONNECT TO EXISTING MH2
T/G= 62.24
INV.(N)= 58.42

EXIST. SWALE

EX. 250mmø SAN

EX. 1200mmø WM

EXISTING WATER MAIN EASEMENT

AREA = 0.3ha.

WATERMAIN TABLE

STATION	ELEVATION: FINISHED C/L ROAD GRADE	ELEVATION: TOP OF WATERMAIN	DESCRIPTION
2+070.65	61.57	58.17	254mmø WATERMAIN (REFER TO DRAWINGS 19616-01&02)
2+073.8	61.55	58.15	EXISTING 200mmø SANITARY SERVICE CROSSING (INV.=±58.40m)
2+074.8	61.55	58.15	EXISTING 150mmø STORM SERVICE CROSSING (INV.=±58.40m)
2+117.9	60.65	58.25	CONNECT EX. 100mmø WATER SERVICE TO 254mmø WATERMAIN
2+134	60.42	58.02	254mm VALVE AND VALVE BOX
2+141.0	60.33	57.93	254mmX152mm TEE
2+142.3	60.33	57.93	22.5° VERTICAL BEND
2+143.3	60.33	58.32	22.5° VERTICAL BEND
2+144.3	60.32	58.32	EXISTING 300mmø STORM SEWER CROSSING (INV.=±57.33m)
2+145.3	60.31	58.32	22.5° VERTICAL BEND
2+146.3	60.30	57.90	22.5° VERTICAL BEND
2+187	62.30	59.90	254mmX254mm TEE
2+199	62.30	59.90	254mmX152mm REDUCER
2+180	62.26	59.86	300mmø STORM SEWER CROSSING (INV.=59.16m)
2+194.0	62.29	59.89	152mmø x 152mmø HYDRANT TEE
2+198.5	62.60	60.40	45° HORIZONTAL BEND
2+201	62.85	60.45	152mm VALVE AND VALVE BOX
2+202.5	62.85	60.45	45° HORIZONTAL BEND
2+204	62.30	60.05	152mmø/100mmø REDUCER
2+213.3	63.40	61.00	BUILDING CONNECTION

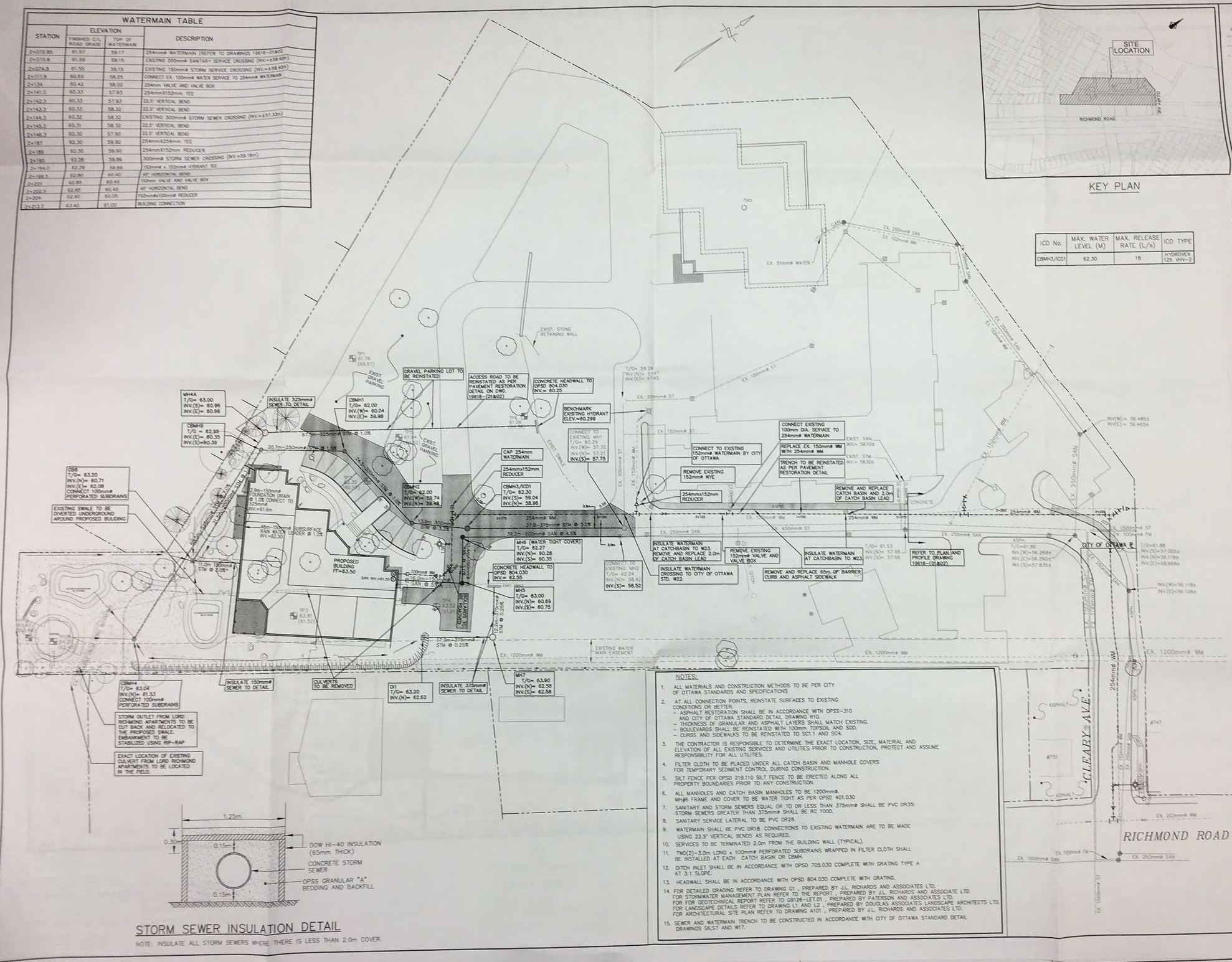
SITE LOCATION
RICHMOND ROAD
CLEARY AVE.
EX. 51mmø WATER
EX. 250mmø SAN
EX. 100mmø FM
EX. 200mmø SAN
EX. 150mmø ST
EX. 1200mmø WM
EX. 254mmø SAN
EX. 203mmø WM
EX. 1500mmø SAN
EX. 100mmø FM
EX. 250mmø SAN
EXIST. STONE RETAINING WALL
GRAVEL PARKING LOT TO BE REINSTATED
ACCESS ROAD TO BE REINSTATED AS PER PAVEMENT RESTORATION DETAIL ON DWG. 19616-(01&02)
CONCRETE HEADWALL TO OPSD 804.030 INV.= 60.25
BENCHMARK EXISTING HYDRANT ELEV.=60.299
CONNECT TO EXISTING MH1 INV.(W)= 57.32 INV.(N)= 57.27 INV.(S)= 57.75
CONNECT EXISTING 100mm DIA. SERVICE TO 254mmø WATERMAIN
REPLACE EX. 150mmø WM WITH 254mmø WM
TRENCH TO BE REINSTATED AS PER PAVEMENT RESTORATION DETAIL
CONNECT TO EXISTING 152mmø WATERMAIN BY CITY OF OTTAWA
REMOVE EXISTING 152mmø WYE
254mmx152mm REDUCER
REMOVE AND REPLACE CATCH BASIN AND 2.0m OF CATCH BASIN LEAD
INSULATE WATERMAIN AT CATCHBASIN TO MH3
REMOVE EXISTING 152mmø VALVE AND VALVE BOX
INSULATE WATERMAIN AT CATCHBASIN TO MH3
REMOVE AND REPLACE 65m OF BARRIER CURB AND ASPHALT SIDEWALK
INSULATE WATERMAIN CROSSING TO CITY OF OTTAWA STD. W22.
REFER TO PLAN AND PROFILE DRAWING (19616-(01&02))
CAP 254mm WATERMAIN
254mmx152mm REDUCER
MH4A T/Gr= 63.00 INV.(S)= 60.98 INV.(E)= 60.98
INSULATE 525mmø SEWER TO DETAIL
CBMH1 T/Gr= 62.00 INV.(W)= 60.04 INV.(E)= 59.98
CBMH9 T/Gr = 62.95 INV.(E)= 60.35 INV.(S)=60.39
CBMH2 T/Gr= 62.00 INV.(W)= 59.74 INV.(N)= 58.96
CBMH3/ICD1 T/Gr= 62.30 INV.(S)= 59.04 INV.(N)= 58.96
CB8 T/Gr= 63.20 INV.(N)= 60.71 INV.(E)= 62.08 CONNECT 100mmø PERFORATED SUBDRAINS
EXISTING SWALE TO BE DIVERTED UNDERGROUND AROUND PROPOSED BUILDING
PROPOSED BUILDING FF=63.50
MH8 (WATER TIGHT COVER) T/Gr= 62.27 INV.(N)= 60.28 INV.(S)= 60.35
CONCRETE HEADWALL TO OPSD 804.030 INV.= 62.55
MH5 T/Gr= 63.00 INV.(N)= 60.69 INV.(S)= 60.75
MH6 T/Gr= 63.52 (61.51)
MH7 T/Gr= 63.90 INV.(N)= 62.58 INV.(S)= 62.58
CONNECT TO EXISTING MH2 T/Gr= 62.24 INV.(N)= 58.42 INV.(S)= 58.52
CBMH4 T/Gr= 63.04 INV.(N)= 61.53 CONNECT 100mmø PERFORATED SUBDRAINS
STORM OUTLET FROM LORD RICHMOND APARTMENTS TO BE CUT BACK AND RELOCATED TO THE PROPOSED SWALE. EMBANKMENT TO BE STABILIZED USING RIP-RAP
EXACT LOCATION OF EXISTING CULVERT FROM LORD RICHMOND APARTMENTS TO BE LOCATED IN THE FIELD.
INSULATE 150mmø SEWER TO DETAIL
CULVERTS TO BE REMOVED
INSULATE 375mmø SEWER TO DETAIL
D1 T/Gr= 63.20 INV.(N)= 62.62
TP1 61.76 (60.57)
TP2 61.44 (60.24)
TP3 63.81 (61.52)
TP4 63.52 (61.51)
EXIST. GRAVEL PARKING
EXIST. GRAVEL PARKING
SAN INV.=61.30
STM INV.=61.30
EXISTING WATER MAIN EASEMENT
ASPH.
CONCRETE
#747
#751
RICHMOND ROAD
CITY OF OTTAWA P
T/Gr=61.88 INV.(W)=56.268± INV.(E)=56.260± INV.(S)=57.835±
T/Gr=61.88 INV.(S)=57.000± INV.(N)=56.118± INV.(E)=56.668±
INV.(W)= 56.485± INV.(E)= 56.465±
INV.(W)=56.118± INV.(E)=56.108±
T/Gr= 59.28 INV.(N)= 57.47 INV.(E)= 57.45
T/Gr= 61.53 INV.(N)= 57.98 INV.(S)= 57.98
1.0m-150mmø FOUNDATION DRAIN @ 1.0% CONNECT TO MH3 INV.=61.6m
40m-150mmø PERFORATED SUBSURFACE LEADER @ 1.0% INV.=62.30
7.0m-100mmø STM @ 2.0%
20.7m-250mmø STM @ 1.0%
37.8m-375mmø STM @ 3.2%
39.2m-300mmø SAN @ 4.5%
17.0m-375mmø STM @ 0.25%
2.0m
3.0m
3.0m
3.0m
1.0m
1.0m
1

Appendix E GEOTECHNICAL REPORT

Geotechnical Engineering

Environmental Engineering

Hydrogeology

Geological Engineering

Materials Testing

Building Science

Archaeological Services

Paterson Group Inc.
Consulting Engineers
154 Colonnade Road South
Ottawa (Nepean), Ontario
Canada K2E 7J5

Tel: (613) 226-7381
Fax: (613) 226-6344
www.patersongroup.ca

patersongroup

Geotechnical Investigation

Proposed Multi-Storey Building
851 Richmond Road - Ottawa

Prepared For

Homestead Land Holdings Ltd.

October 3, 2017

Report: PG4163-1 Revision 1

Table of Contents

Page

1.0 Introduction . . . 1

2.0 Proposed Project . . . 1

3.0 Method of Investigation
3.1 Field Investigation . . . 2
3.2 Field Survey . . . 3
3.3 Laboratory Testing . . . 3

4.0 Observations
4.1 Surface Conditions . . . 4
4.2 Subsurface Profile . . . 4
4.3 Groundwater . . . 4

5.0 Discussion
5.1 Geotechnical Assessment . . . 6
5.2 Site Grading and Preparation . . . 6
5.3 Foundation Design . . . 11
5.4 Design of Earthquakes . . . 11
5.5 Basement Slab . . . 13
5.6 Basement Wall . . . 13
5.7 Pavement Structure . . . 15

6.0 Design and Construction Precautions
6.1 Foundation Drainage and Backfill . . . 17
6.2 Protection Against Frost Action . . . 18
6.3 Excavation Side Slopes . . . 18
6.4 Pipe Bedding and Backfill . . . 20
6.5 Groundwater Control . . . 20
6.6 Winter Construction . . . 21
6.7 Corrosion Potential and Sulphate . . . 22

7.0 Recommendations . . . 23

8.0 Statement of Limitations . . . 24

Appendices

Appendix 1 Soil Profile and Test Data Sheets
Symbols and Terms
Analytical Testing Results

Appendix 2 Figure 1 - Key Plan
Figures 2 and 3 - Seismic Shear Wave Velocity Profiles
Drawing PG4163-1 - Test Hole Location Plan

1.0 Introduction

Paterson Group (Paterson) was commissioned by Homestead Land Holdings Ltd. (Homestead) to conduct a geotechnical investigation for the proposed multi-storey building to be located at 851 Richmond Road in the City of Ottawa (refer to Figure 1 - Key Plan presented in Appendix 2).

The objective of the investigation was to:

- ❑ Determine the subsoil and groundwater conditions at this site by means of boreholes.

- ❑ Provide geotechnical recommendations for the design of the proposed development including construction considerations which may affect its design.

The following report has been prepared specifically and solely for the aforementioned project which is described herein. It contains our findings and includes geotechnical recommendations pertaining to the design and construction of the subject development as they are understood at the time of writing this report.

Investigating the presence or potential presence of contamination on the subject property was not part of the scope of work of this present investigation. A report addressing environmental issues for the subject site was prepared under separate cover.

2.0 Proposed Project

It is our understanding that the proposed project consists of a multi-storey building with two underground parking levels encompassing the majority of the subject site.

3.0 Method of Investigation

3.1 Field Investigation

The field program for our geotechnical investigation was carried out on June 1, 2017. At that time, a total of six (6) boreholes were advanced to a maximum depth of 7.0 m. The borehole locations were determined in the field by Paterson personnel taking into consideration site features and underground services. The locations of the boreholes are shown on Drawing PG4163-1 - Test Hole Location Plan included in Appendix 2.

The boreholes were put down using a track-mounted auger drill rig operated by a two person crew. All fieldwork was conducted under the full-time supervision of personnel from Paterson's geotechnical division under the direction of a senior engineer. The testing procedure consisted of augering and rock coring to the required depths and at the selected locations and sampling the overburden.

Sampling and In Situ Testing

Soil samples were collected from the boreholes using two different techniques, namely, sampled directly from the auger flights (AU) or collected using a 50 mm diameter split-spoon (SS) sampler. Rock cores (RC) were obtained using 47.6 mm inside diameter coring equipment. All samples were visually inspected and initially classified on site. The auger and split-spoon samples were placed in sealed plastic bags, and rock cores were placed in cardboard boxes. All samples were transported to our laboratory for further examination and classification. The depths at which the auger, split spoon and rock core samples were recovered from the boreholes are shown as AU, SS and RC, respectively, on the Soil Profile and Test Data sheets presented in Appendix 1.

The Standard Penetration Test (SPT) was conducted in conjunction with the recovery of the split-spoon samples. The SPT results are recorded as "N" values on the Soil Profile and Test Data sheets. The "N" value is the number of blows required to drive the split-spoon sampler 300 mm into the soil after a 150 mm initial penetration using a 63.5 kg hammer falling from a height of 760 mm.

The recovery value and a Rock Quality Designation (RQD) value were calculated for each drilled section of bedrock and are presented on the borehole logs. The recovery value is the length of the bedrock sample recovered over the length of the drilled section. The RQD value is the total length of intact rock pieces longer than 100 mm over the length of the core run. The values indicate the bedrock quality.

The subsurface conditions observed in the boreholes were recorded in detail in the field. The soil profiles are presented on the Soil Profile and Test Data sheets in Appendix 1 of this report.

Groundwater

Monitoring wells and flexible standpipes were installed in the boreholes to permit monitoring of the groundwater levels subsequent to the completion of the sampling program.

Sample Storage

All samples will be stored in the laboratory for a period of one month after issuance of this report. They will then be discarded unless we are otherwise directed.

3.2 Field Survey

The borehole locations were determined by Paterson personnel taking into consideration the presence of underground and aboveground services. The location and ground surface elevation at each borehole location was surveyed by Paterson personnel. The ground surface elevation at the borehole locations were surveyed with respect to a temporary benchmark (TBM), consisting of the top of catch basin located within the northeast corner the existing site. A geodetic elevation of 65.24 m was provided for the TBM by Homestead. The borehole locations and ground surface elevation at each borehole location are presented on Drawing PG4163-1 - Test Hole Location Plan in Appendix 2.

3.3 Laboratory Testing

The soil samples and rock cores recovered from the subject site were examined in our laboratory to review the results of the field logging.

4.0 Observations

4.1 Surface Conditions

The subject site is currently occupied by at-grade parking for the adjacent multi-storey residential building to the west. The site is bordered to the north by an easement, which contains a large diameter watermain, followed by residential buildings, to the south by Richmond Road and to the east by at grade parking area. The ground surface across the site is relatively flat and at grade with the neighbouring properties.

4.2 Subsurface Profile

Generally, the subsurface profile encountered at the borehole locations consists of 60 to 100 mm thickness of asphalt overlying a granular layer, consisting of crushed stone with silt and sand with maximum thickness of 230 mm. The pavement structure lies atop a fill layer, consisting of loose to compact, brown to grey sand and gravel with trace to some silt and clay which extends to a depth of approximately 1.5 to 2.5 m. A native glacial till deposit was encountered underlying the abovenoted fill layers followed by a grey limestone bedrock. Generally, the bedrock quality consists of poor quality within the upper 0.5 to 1 m and fair to excellent quality at depth based on the RQD values. The upper portion of the bedrock was noted to consist of a weathered, poor quality bedrock. Reference should be made to the Soil Profile and Test Data sheets in Appendix 1 for specific details of the soil profiles encountered at each test hole location.

Based on available geological mapping, the bedrock in this area mostly consists of limestone with some shaly partings of the Ottawa formation with an overburden drift thickness of less than 5 m depth.

4.3 Groundwater

The measured groundwater levels in the monitoring wells and piezometers at the borehole locations are presented in Table 1. It should be further noted that the groundwater level could vary at the time of construction.

Table 1 - Summary of Groundwater Level Readings				
Test Hole Number	Ground Elevation (m)	Groundwater Levels (m)		Recording Date
		Depth	Elevation	
BH 1	66.03	2.93	63.10	June 8, 2017
BH 2	65.69	2.31	63.38	June 8, 2017
BH 3	65.44	3.72	61.72	June 8, 2017
BH 4	66.05	2.19	63.86	June 8, 2017
BH 5	65.79	3.20	62.59	June 8, 2017
BH 6	65.56	3.35	62.21	June 8, 2017

5.0 Discussion

5.1 Geotechnical Assessment

From a geotechnical perspective, the subject site is adequate for the proposed multi-storey building. The proposed building is expected to be founded on conventional footings placed on clean, surface sounded bedrock.

Bedrock removal will be required to complete the two (2) levels of underground parking. Line drilling and controlled blasting where large quantities of bedrock need to be removed is recommended. The blasting operations should be planned and completed under the guidance of a professional engineer with experience in blasting operations.

An alignment of a large diameter watermain runs within an easement along the north property boundary of the subject site. It is expected that the adjacent watermain could be subjected to potential vibrations associated with the bedrock blasting program. To ensure that no detrimental vibrations cause damage to the adjacent watermain, a vibration attenuation trench is recommended for the bedrock along the north excavation face, as well as a vibration monitoring and control program during the blasting and excavation work required for the proposed building excavation.

The above and other considerations are further discussed in the following sections.

5.2 Site Grading and Preparation

Stripping Depth

Due to the relatively shallow bedrock depth at the subject site and the anticipated founding level for the proposed building, all existing overburden material will be excavated from within the proposed building footprint. Bedrock removal will be required for the construction of the parking garage levels.

Bedrock Removal

Based on the bedrock encountered in the area, it is expected that line-drilling in conjunction with hoe-ramming or controlled blasting will be required to remove the bedrock. In areas of weathered bedrock and where only a small quantity of bedrock is to be removed, bedrock removal may be possible by hoe-ramming.

Prior to considering blasting operations, the effects on the existing services, buildings and other structures should be addressed. A pre-blast or construction survey located in proximity of the blasting operations should be conducted prior to commencing construction. The extent of the survey should be determined by the blasting consultant and sufficient to respond to any inquiries/claims related to the blasting operations.

As a general guideline, peak particle velocity (measured at the structures) should not exceed 25 mm/s during the blasting program to reduce the risks of damage to the existing structures.

The blasting operations should be planned and conducted under the supervision of a licensed professional engineer who is an experienced blasting consultant.

Excavation side slopes in sound bedrock could be completed with almost vertical side walls. Where bedrock is of lower quality, the excavation face should be free of any loose rock. An area specific review should be completed by the geotechnical consultant at the time of construction to determine if rock bolting or other remedial measures are required to provide a safe excavation face for areas where low quality bedrock is encountered.

A vibration attenuation trench is recommended to be completed within the bedrock along the north property boundary. The construction of the vibration attenuation trench would require line drilling in a tight pattern on both sides of the proposed 1 m wide trench alignment and within the interior portion of the trench to the design underside of footing elevation. A hoe ram operation would be used to break up the bedrock and remove it from the trench. It is expected that the coreholes for the bedrock blasting program may not be possible within 1 to 2 m of the attenuation trench due to the presence of the drilled holes within the attenuation trench, which can cause an energy loss and blow-out during blasting if connected to the blast source by potential fractures within the bedrock. Therefore, a hoe ramming operation will most likely be required to complete the bedrock removal within the area adjacent to the attenuation trench.

Vibration Considerations

Construction operations could cause vibrations, and possibly, sources of nuisance to the community. Therefore, means to reduce the vibration levels as much as possible should be incorporated in the construction operations to maintain a cooperative environment with the residents.

The following construction equipments could cause vibrations: piling equipment, hoe ram, compactor, dozer, crane, truck traffic, etc. The construction of the shoring system with soldier piles or sheet piling will require these pieces of equipments. Vibrations, caused by blasting or construction operations could cause detrimental vibrations on the adjoining buildings and structures. Therefore, it is recommended that all vibrations be limited.

Two parameters determine the recommended vibration limit, the maximum peak particle velocity and the frequency. For low frequency vibrations, the maximum allowable peak particle velocity is less than that for high frequency vibrations. As a guideline, the peak particle velocity should be less than 15 mm/s between frequencies of 4 to 12 Hz, and 50 mm/s above a frequency of 40 Hz (interpolate between 12 and 40 Hz). These guidelines are for current construction standards. These guidelines are above perceptible human level and, in some cases, could be very disturbing to some people, a pre-construction survey is recommended to minimize the risks of claims during or following the construction of the proposed building.

Vibration Monitoring and Control Plan

To ensure that no disturbance to the existing watermain occurs, a vibration monitoring and control plan (VMCP) is recommended during the excavation program. The purpose of the vibration monitoring and control plan is to provide measures to be implemented by the contractor to manage excavation operations and any other vibration sources during the construction for the proposed development. The VMCP will also provide a guideline for assessing results against the relevant vibration impact assessment criteria and recommendations to meet the required limits.

The monitoring program will incorporate real time results at the existing watermain segment adjacent to the subject site. The monitoring equipment should consist of a tri-axial seismograph, capable of measuring vibration intensities up to 254 mm/s at a frequency response of 2 to 250 Hz. At least two vibration monitoring devices should be placed adjacent to the existing watermain. It is recommended that the vibration monitoring devices be installed at invert level of the existing watermain and periodically inspected during the construction program.

A copy of the geotechnical report, which includes the VMCP should be provided to all parties involved with the construction for review. A meeting between Paterson and site contractor should be conducted prior to any excavation or construction of the subject site to review the following:

- ❑ Review the pre-condition/pre-construction survey;
- ❑ Control measures (i.e vibrations, noise);
- ❑ Monitoring locations;
- ❑ Tracking and reporting of excavation progress, and;
- ❑ Review procedure for exceedances (i.e vibrations, noise), complaints, evaluation and corrective measures.

When an event is triggered, Paterson will review the results and provide any necessary feedback. Otherwise, the vibration results will be summarized in the weekly report. The following table outlines the vibration limits for the adjacent watermain segment.

Table 2 - Structure Vibration Limits for adjacent Watermain Segment

Dominant Frequency Range (Hz)	Peak Particle Velocity (mm/s)	Event	Description of Event
<10	all	none	no action required
<40	>10	trigger level	Warning e-mail sent to contractor.
<40	≥15	exceedance level	Exceedance e-mail and phone call to the contractor. All operations are ceased to review on-site activities.
>40	>15	trigger level	Warning e-mail sent to contractor.
>40	≥20	exceedance level	Exceedance e-mail and phone call to the contractor. All operations are ceased to review on-site activities.

The monitoring protocol should include the following information:

Trigger Level Event
- ❑ Paterson will review all vibrations over the established warning level, and;
- ❑ Paterson will notify the contractor if any vibration occur due to construction activities and are close to exceedance level.

Exceedance Level Event
- ❑ Paterson will notify all the relevant stakeholders via email;
- ❑ Ensure monitors are functioning, and;
- ❑ Issue the vibration exceedance result.

Fill Placement

Fill used for grading beneath the building areas should consist, unless otherwise specified, of clean imported granular fill, such as Ontario Provincial Standard Specifications (OPSS) Granular A or Granular B Type II. This material should be tested and approved prior to delivery to the site. The fill should be placed in lifts no greater than 300 mm thick and compacted using suitable compaction equipment for the lift thickness. Fill placed beneath the proposed building areas should be compacted to at least 98% of its standard Proctor maximum dry density (SPMDD).

Non-specified existing fill along with site-excavated soil can be used as general landscaping fill and beneath parking areas where settlement of the ground surface is of minor concern. In landscaped areas, these materials should be spread in thin lifts and at least compacted by the tracks of the spreading equipment to minimize voids. If these materials are to be used to build up the subgrade level for areas to be paved, they should be compacted in thin lifts to a minimum density of 95% of their respective SPMDD. Non-specified existing fill and site-excavated soils are not suitable for use as backfill against foundation walls unless a composite drainage blanket connected to a perimeter drainage system is provided.

5.3 Foundation Design

Bearing Resistance Values

Footings placed on a clean, surface sounded limestone bedrock surface can be designed using a factored bearing resistance value at ultimate limit states (ULS) of **2,500 kPa** incorporating a geotechnical resistance factor of 0.5.

A clean, surface-sounded bedrock bearing surface should be free of loose materials, and have no near surface seams, voids, fissures or open joints which can be detected from surface sounding with a rock hammer.

Lateral Support

The bearing medium under footing-supported structures is required to be provided with adequate lateral support with respect to excavations and different foundation levels. Adequate lateral support is provided to a sound bedrock bearing medium when a plane extending down and out from the bottom edge of the footing at a minimum of 1H:6V (or flatter) passes only through sound bedrock or a material of the same or higher capacity as the bedrock, such as concrete. A weathered bedrock bearing medium will require a lateral support zone of 1H:1V (or flatter).

Settlement

Footings bearing on an acceptable bedrock bearing surface and designed for the bearing resistance values provided herein will be subjected to negligible potential post-construction total and differential settlements.

5.4 Design for Earthquakes

A site specific shear wave velocity test was completed by Paterson to accurately determine the applicable seismic site classification for foundation design of the proposed building as presented in Table 4.1.8.4.A of the Ontario Building Code 2012. Two (2) shear wave velocity profiles from our on-site testing are presented in Appendix 2.

Field Program

The location of the seismic array was chosen to provide adequate coverage of the area. The seismic array testing location is presented in Drawing PG4163-1 - Test Hole Location Plan in Appendix 2.

At the seismic array location, Paterson field personnel placed 18 horizontal 4.5 Hz. geophones mounted to the surface by means of two 75 mm ground spikes attached to the geophone land case. The geophones were spaced at 2 m intervals and connected by a geophone spread cable to a Geode 24 Channel seismograph.

The seismograph was connected to a computer laptop and a hammer trigger switch attached to a 12 pound dead blow hammer. The hammer trigger switch sends a start signal to the seismograph. The hammer is used to strike an I-Beam seated into the ground surface, which creates a polarized shear wave. The hammer shots are repeated between five to ten times at each shot location to improve signal to noise ratio. The shot locations are also completed in forward and reverse directions (i.e.- striking both sides of the I-Beam seated parallel to the geophone array). The shot locations are located at 3,4.5 and 13.5 m away from the first, 3, 4.5, and 14 m away from the last geophone, and at the center of the seismic array.

The methods of testing completed by Paterson are guided by the standard testing procedures used by the expert seismologists at Carleton University and Geological Survey of Canada (GSC).

Data Processing and Interpretation

Interpretation for the shear wave velocity results were completed by Paterson personnel. Shear wave velocity measurement was made using reflection/refraction methods. The interpretation is performed by recovering arrival times from direct and refracted waves. The interpretation is repeated at each shot location to provide an average shear wave velocity, Vs_{30}, of the upper 30 m profile, immediately below the building's foundation.

Based on the test results, the average overburden seismic shear wave velocity is 248 m/s. Through interpretation, the bedrock has a shear wave velocity of 2,256 m/s. The Vs_{30} was calculated using the standard equation for average shear wave velocity from the Ontario Building Code (OBC) 2012.

The Vs_{30} was calculated using the standard equation for average shear wave velocity calculation from the Ontario Building Code (OBC) 2012, as presented below.

$$V_{s30} = \frac{Depth_{OfInterest}\,(m)}{\sum\left(\frac{(Depth_i\,(m)}{Vs_i\,(m/s)}\right)}$$

$$V_{s30} = \frac{30m}{\left(\frac{0.0m}{248m/s} + \frac{30.0m}{2{,}256m/s}\right)}$$

$$V_{s30} = 2{,}256m/s$$

Based on the results of the seismic testing, the average shear wave velocity, Vs_{30}, beneath the foundation is 2,256 m/s. Therefore, a **Site Class A** is applicable for design of the proposed buildings, as per Table 4.1.8.4.A of the OBC 2012. The soils underlying the subject site are not susceptible to liquefaction.

5.5 Basement Slab

All overburden soil will be removed for the proposed building and the basement floor slab will be founded on a bedrock medium. OPSS Granular A or Granular B Type II, with a maximum particle size of 50 mm, are recommended for backfilling below the floor slab. It is recommended that the upper 200 mm of sub-slab fill consists of a 19 mm clear crushed stone.

In consideration of the groundwater conditions encountered during the investigation, a subfloor drainage system, consisting of lines of perforated drainage pipe subdrains connected to a positive outlet, should be provided in the clear stone backfill under the lower basement floor.

5.6 Basement Wall

It is expected that a portion of the basement walls are to be poured against a composite drainage blanket, which will be placed against the exposed bedrock face. A nominal coefficient of at-rest earth pressure of 0.05 is recommended in conjunction with a dry unit weight of 23.5 kN/m^3 (effective unit weight of 15.5 kN/m^3). A seismic earth pressure component will not be applicable for the foundation wall, which is to be poured against the bedrock face. It is expected that the seismic earth pressure will be transferred to the underground floor slabs, which should be designed to accommodate these pressures. A hydrostatic groundwater pressure should be added for the portion below the groundwater level.

Undrained conditions are anticipated (i.e. below the groundwater level). Therefore, the applicable effective unit weight of the retained soil should be 13 kN/m^3, where applicable. A hydrostatic pressure should be added to the total static earth pressure when calculating the effective unit weight.

Two distinct conditions, static and seismic, should be reviewed for design calculations. The parameters for design calculations for the two conditions are presented below.

Static Conditions

The static horizontal earth pressure (p_o) could be calculated with a triangular earth pressure distribution equal to $K_o \cdot \gamma \cdot H$ where:

K_o = at-rest earth pressure coefficient of the applicable retained soil, 0.5
γ = unit weight of fill of the applicable retained soil (kN/m^3)
H = height of the wall (m)

An additional pressure with a magnitude equal to $K_o \cdot q$ and acting on the entire height of the wall should be added to the above diagram for any surcharge loading, q (kPa), that may be placed at ground surface adjacent to the wall. The surcharge pressure will only be applicable for static analyses and should not be used in conjunction with the seismic loading case.

Actual earth pressures could be higher than the “at-rest” case if care is not exercised during the compaction of the backfill materials to maintain a minimum separation of 0.3 m from the walls with the compaction equipment.

Seismic Conditions

The total seismic force (P_{AE}) includes both the earth force component (P_o) and the seismic component (ΔP_{AE}).

The seismic earth force (ΔP_{AE}) could be calculated using $0.375 \cdot a_c \cdot \gamma \cdot H^2/g$ where:

a_c = $(1.45-a_{max}/g)a_{max}$
γ = unit weight of fill of the applicable retained soil (kN/m^3)
H = height of the wall (m)
g = gravity, 9.81 m/s^2

The peak ground acceleration, (a_{max}), for the Ottawa area is 0.32g according to OBC 2012. The vertical seismic coefficient is assumed to be zero.

The earth force component (P_o) under seismic conditions could be calculated using $P_o = 0.5\ K_o\ \gamma\ H^2$, where $K_o = 0.5$ for the soil conditions presented above.

The total earth force (P_{AE}) is considered to act at a height, h (m), from the base of the wall, where:

$h = \{P_o \cdot (H/3) + \Delta P_{AE} \cdot (0.6 \cdot H)\}/P_{AE}$

The earth forces calculated are unfactored. For the ULS case, the earth loads should be factored as live loads, as per OBC 2012.

5.7 Pavement Structure

For design purposes, the pavement structure presented in the following tables could be used for the design of car parking areas and access lanes.

Table 3 - Recommended Pavement Structure - Car Only Parking Areas

Thickness (mm)	Material Description
50	**Wear Course** - HL 3 or Superpave 12.5 Asphaltic Concrete
150	**BASE** - OPSS Granular A Crushed Stone
300	**SUBBASE** - OPSS Granular B Type II
SUBGRADE - Either fill, in situ soil or OPSS Granular B Type I or II material placed over in situ soil or fill	

Table 4 - Recommended Pavement Structure - Access Lanes	
Thickness (mm)	**Material Description**
40	**Wear Course -** HL3 or Superpave 12.5 Asphaltic Concrete
50	**Binder Course -** HL8 or Superpave 19.0 Asphaltic Concrete
150	**BASE** - OPSS Granular A Crushed Stone
400	**SUBBASE** - OPSS Granular B Type II
SUBGRADE - Either fill, in situ soil or OPSS Granular B Type I or II material placed over in situ soil or fill	

Minimum Performance Graded (PG) 58-34 asphalt cement should be used for this project.

If soft spots develop in the subgrade during compaction or due to construction traffic, the affected areas should be excavated to a competent layer and replaced with OPSS Granular B Type II material. Weak subgrade conditions may be experienced over service trench fill materials. This may require the use of a geotextile, such as Terratrack 200 or equivalent, thicker subbase or other measures that can be recommended at the time of construction as part of the field observation program.

The pavement granular base and subbase should be placed in maximum 300 mm thick lifts and compacted to a minimum of 100% of the material's SPMDD using suitable vibratory equipment, noting that excessive compaction can result in subgrade softening.

6.0 Design and Construction Precautions

6.1 Foundation Drainage and Backfill

Foundation Drainage

It is recommended that a perimeter foundation drainage system be provided for the proposed structures. It is expected that insufficient room is available for exterior backfill. It is suggested that this system could be as follows:

- ❑ Bedrock vertical surface (Hoe ram any irregularities and prepare bedrock surface. Shotcrete areas to fill in cavities and smooth out angular features at the bedrock surface);
- ❑ composite drainage layer

It is recommended that the composite drainage system (such as Miradrain G100N, Delta Drain 6000 or equivalent) extend down to the footing level. It is recommended that 150 mm diameter sleeves at 3 m centres be cast in the footing or at the foundation wall/footing interface to allow the infiltration of water to flow to the interior perimeter drainage pipe. The perimeter drainage pipe and underfloor drainage system should direct water to sump pit(s) within the lower basement area.

Underfloor Drainage

It is anticipated that underfloor drainage will be required to control water infiltration. For preliminary design purposes, we recommend that 100 or 150 mm in perforated pipes be placed at 6 m centres. The spacing of the underfloor drainage system should be confirmed at the time of completing the excavation when water infiltration can be better assessed.

Foundation Backfill

Above the bedrock surface, backfill against the exterior sides of the foundation walls should consist of free-draining non frost susceptible granular materials. The greater part of the site excavated materials will be frost susceptible and, as such, are not recommended for re-use as backfill against the foundation walls, unless used in conjunction with a drainage geocomposite, such as Miradrain G100N or Delta Drain 6000, connected to the perimeter foundation drainage system. Imported granular materials, such as clean sand or OPSS Granular B Type I granular material, should otherwise be used for this purpose.

6.2 Protection Against Frost Action

Perimeter footings of heated structures are required to be insulated against the deleterious effect of frost action. A minimum 1.5 m thick soil cover (or equivalent) should be provided in this regard.

A minimum of 2.1 m thick soil cover (or equivalent) should be provided for other exterior unheated footings.

6.3 Excavation Side Slopes

Unsupported Excavations

The side slopes of excavations in the soil and fill overburden materials should be either cut back at acceptable slopes or should be retained by shoring systems from the start of the excavation until the structure is backfilled. It is assumed that sufficient room will be available for the greater part of the excavation to be undertaken by open-cut methods (i.e. unsupported excavations).

The excavation side slopes above the groundwater level extending to a maximum depth of 3 m should be cut back at 1H:1V or flatter. The flatter slope is required for excavation below groundwater level. The subsoil at this site is considered to be mainly Type 2 and 3 soil according to the Occupational Health and Safety Act and Regulations for Construction Projects.

Excavated soil should not be stockpiled directly at the top of excavations and heavy equipment should be kept away from the excavation sides.

Slopes in excess of 3 m in height should be periodically inspected by the geotechnical consultant in order to detect if the slopes are exhibiting signs of distress.

It is recommended that a trench box be used at all times to protect personnel working in trenches with steep or vertical sides. It is expected that services will be installed by “cut and cover” methods and excavations will not be left open for extended periods of time.

Temporary Shoring

The design and approval of the shoring system will be the responsibility of the shoring contractor and the shoring designer hired by the shoring contractor. It is the responsibility of the shoring contractor to ensure that the temporary shoring is in compliance with safety requirements, designed to avoid any damage to adjacent structures and include dewatering control measures. In the event that subsurface conditions differ from the approved design during the actual installation, it is the responsibility of the shoring contractor to commission the required experts to re-assess the design and implement the required changes. Furthermore, the design of the temporary shoring system should take into consideration, a full hydrostatic condition which can occur during significant precipitation events.

The temporary system could consist of soldier pile and lagging system or interlocking steel sheet piling. Any additional loading due to street traffic, construction equipment, adjacent structures and facilities, etc., should be included to the earth pressures described below. These systems could be cantilevered, anchored or braced. Generally, the shoring systems should be provided with tie-back rock anchors to ensure the stability. The shoring system is recommended to be adequately supported to resist toe failure, if required, by means of rock bolts or extending the piles into the bedrock through pre-augered holes if a soldier pile and lagging system is the preferred method.
The earth pressures acting on the shoring system may be calculated with the following parameters.

Table 5 - Soil Parameters

Parameters	Values
Active Earth Pressure Coefficient (K_a)	0.33
Passive Earth Pressure Coefficient (K_p)	3
At-Rest Earth Pressure Coefficient (K_o)	0.5
Dry Unit Weight (γ), kN/m^3	20
Effective Unit Weight (γ), kN/m^3	13

The active earth pressure should be calculated where wall movements are permissible while the at-rest pressure should be calculated if no movement is permissible. The dry unit weight should be calculated above the groundwater level while the effective unit weight should be calculated below the groundwater level.

The hydrostatic groundwater pressure should be included to the earth pressure distribution wherever the effective unit weight are calculated for earth pressures. If the groundwater level is lowered, the dry unit weight for the soil/bedrock should be calculated full weight, with no hydrostatic groundwater pressure component.

For design purposes, the minimum factor of safety of 1.5 should be calculated.

6.4 Pipe Bedding and Backfill

A minimum of 300 mm of OPSS Granular A should be placed for bedding for sewer or water pipes when placed on bedrock subgrade. The bedding should extend to the spring line of the pipe. Cover material, from the spring line to a minimum of 300 mm above the pipe obvert should consist of OPSS Granular A (concrete or PSM PVC pipes) or sand (concrete pipe). The bedding and cover materials should be placed in maximum 225 mm thick lifts compacted to a minimum of 95% of the SPMDD.

Where hard surface areas are considered above the trench backfill, the trench backfill material within the frost zone (about 1.8 m below finished grade) should match the soils exposed at the trench walls to reduce the potential differential frost heaving. The trench backfill should be placed in maximum 300 mm thick loose lifts and compacted to a minimum of 95% of the SPMDD.

6.5 Groundwater Control

Groundwater Control for Building Construction

The contractor should be prepared to direct water away from all bearing surfaces and subgrades, regardless of the source, to prevent disturbance to the founding medium.

Infiltration levels are anticipated to be low through the excavation face. The groundwater infiltration will be controllable with open sumps and pumps.

A temporary MOE permit to take water (PTTW) will be required for this project if more than 50,000 L/day are to be pumped during the construction phase. A minimum of four to five months should be allocated for completion of the application and issuance of the permit by the MOE.

Long-term Groundwater Control

Our recommendations for the proposed building's long-term groundwater control are presented in Subsection 6.1. Any groundwater encountered along the building's perimeter or sub-slab drainage system will be directed to the proposed building's cistern/sump pit. Provided the proposed groundwater infiltration control system is properly implemented and approved by the geotechnical consultant at the time of construction, it is expected that groundwater flow will be low (i.e.- less than 50,000 L/day) with peak periods noted after rain events. A more accurate estimate can be provided at the time of construction, once groundwater infiltration levels are observed. It is anticipated that the groundwater flow will be controllable using conventional open sumps.

Impacts on Neighbouring Structures

Based on our observations, a local groundwater lowering is anticipated under short-term conditions due to construction of the proposed building. It should be noted that the extent of any significant groundwater lowering will take place within a limited range of the subject site due to the minimal temporary groundwater lowering.

The neighbouring structures are expected to be founded within native glacial till and/or directly over a bedrock bearing surface. No issues are expected with respect to groundwater lowering that would cause long term damage to adjacent structures surrounding the proposed building.

6.6 Winter Construction

Precautions must be taken if winter construction is considered for this project.

Where excavations are completed in proximity of existing structures which may be adversely affected due to the freezing conditions. In particular, where a shoring system is constructed, the soil behind the shoring system will be subjected to freezing conditions and could result in heaving of the structure(s) placed within or above frozen soil. Provisions should be made in the contract document to protect the walls of the excavations from freezing, if applicable.

In the event of construction during below zero temperatures, the founding stratum should be protected from freezing temperatures by the installation of straw, propane heaters and tarpaulins or other suitable means. The base of the excavations should be insulated from sub-zero temperatures immediately upon exposure and until such time as heat is adequately supplied to the building and the footings are protected with sufficient soil cover to prevent freezing at founding level.

Trench excavations and pavement construction are difficult activities to complete during freezing conditions without introducing frost in the subgrade or in the excavation walls and bottoms. Precautions should be considered if such activities are to be completed during freezing conditions. Additional information could be provided, if required.

6.7 Corrosion Potential and Sulphate

The results of the analytical testing show that the sulphate content is less than 0.1%. This result indicates that Type 10 Portland cement (normal cement) would be appropriate for this site. The chloride content and pH of the samples indicate that they are not significant factors in creating a corrosive environment for exposed ferrous metals at this site, whereas the resistivity is indicative of an aggressive corrosive environment.

7.0 Recommendations

It is recommended that the following be carried out once the master plan and site development are determined:

- ❑ Review master grading plan from a geotechnical perspective, once available.
- ❑ Observation of all bearing surfaces prior to the placement of concrete.
- ❑ Periodic observation of the condition of unsupported excavation side slopes in excess of 3 m in height, if applicable.
- ❑ Observation of all subgrades prior to placement of backfilling materials.
- ❑ Field density tests to determine the level of compaction achieved.
- ❑ Sampling and testing of the bituminous concrete including mix design reviews.

A report confirming that these works have been conducted in general accordance with our recommendations could be issued upon request, following the completion of a satisfactory material testing and observation program by the geotechnical consultant.

8.0 Statement of Limitations

The recommendations made in this report are in accordance with our present understanding of the project. We request permission to review the grading plan once available. Also, our recommendations should be reviewed when the drawings and specifications are complete.

The client should be aware that any information pertaining to soils and all test hole logs are furnished as a matter of general information only and test hole descriptions or logs are not to be interpreted as descriptive of conditions at locations other than those of the test holes.

A soils investigation is a limited sampling of a site. Should any conditions at the site be encountered which differ from those at the test locations, we request that we be notified immediately in order to permit reassessment of our recommendations.

The present report applies only to the project described in this document. Use of this report for purposes other than those described herein or by person(s) other than Homestead Land Developments or their agent(s) is not authorized without review by this firm for the applicability of our recommendations to the altered use of the report.

Paterson Group Inc.



Nathan Christie, P.Eng.

David J. Gilbert, P.Eng.

Report Distribution:

- ❑ Homestead Land Holdings Ltd. (3 copies)
- ❑ Paterson Group (1 copy)

APPENDIX 1

SOIL PROFILE AND TEST DATA SHEETS

SYMBOLS AND TERMS

patersongroup Consulting Engineers

154 Colonnade Road South, Ottawa, Ontario K2E 7J5

SOIL PROFILE AND TEST DATA

Geotechnical Investigation
Prop. Multi-Storey Building - 851 Richmond Road
Ottawa, Ontario

DATUM TBM - Top of grate of catch basin (refer to Dwg. PG4163-1). Geodetic elevation = 65.24m.

FILE NO. PG4163

REMARKS

HOLE NO. BH 1

BORINGS BY CME 55 Power Auger **DATE** June 1, 2017

SOIL DESCRIPTION	STRATA PLOT	SAMPLE TYPE	SAMPLE NUMBER	SAMPLE % RECOVERY	SAMPLE N VALUE or RQD	DEPTH (m)	ELEV. (m)
GROUND SURFACE						0	66.03
Asphaltic concrete 0.08							
FILL: Brown sand and gravel 0.23		SS	1	42	21		
		SS	2	33	11	1	65.03
FILL: Brown sand and gravel, some silt		SS	3	36	50+		
						2	64.03
2.49		SS	4	71	50+		
Grey fractured limestone **BEDROCK** 3.02						3	63.03
		RC	1	85	69		
						4	62.03
BEDROCK: Fair to excellent quality, grey limestone							
		RC	2	100	100	5	61.03
5.92							
End of Borehole							
(GWL @ 2.93m - June 8, 2017)							

Pen. Resist. Blows/0.3m
● **50 mm Dia. Cone**
○ **Water Content %**

20 40 60 80

Monitoring Well Construction

20 40 60 80 100
Shear Strength (kPa)
▲ Undisturbed △ Remoulded

patersongroup Consulting Engineers

154 Colonnade Road South, Ottawa, Ontario K2E 7J5

SOIL PROFILE AND TEST DATA

Geotechnical Investigation
Prop. Multi-Storey Building - 851 Richmond Road
Ottawa, Ontario

DATUM TBM - Top of grate of catch basin (refer to Dwg. PG4163-1). Geodetic elevation = 65.24m.

FILE NO. PG4163

REMARKS

HOLE NO. BH 2

BORINGS BY CME 55 Power Auger **DATE** June 1, 2017

SOIL DESCRIPTION	STRATA PLOT	SAMPLE TYPE	SAMPLE NUMBER	SAMPLE % RECOVERY	SAMPLE N VALUE or RQD	DEPTH (m)	ELEV. (m)
GROUND SURFACE							
Asphaltic concrete 0.10						0	65.69
FILL: Grey-brown sand, some silt		SS	1	62	11		
		SS	2	25	10	1	64.69
		SS	3	42	5		
						2	63.69
2.29							
Grey fractured limestone 2.44		SS	4	100	50+		
BEDROCK							
End of Borehole							
Practical refusal to augering at 2.44m depth							
(GWL @ 2.31m - June 8, 2017)							

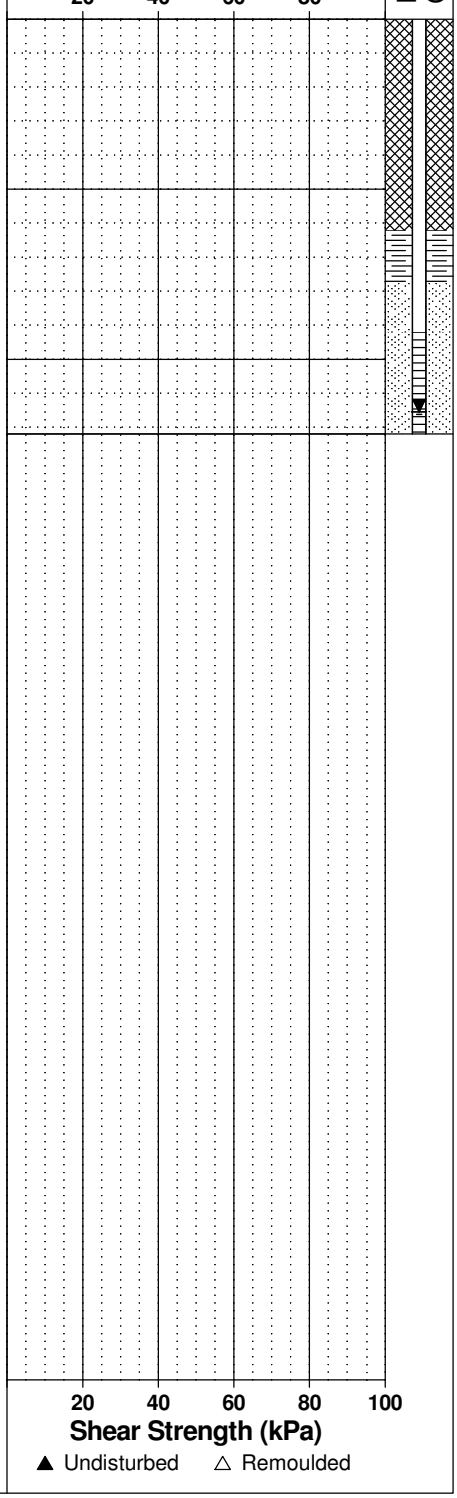

patersongroup Consulting Engineers

154 Colonnade Road South, Ottawa, Ontario K2E 7J5

SOIL PROFILE AND TEST DATA

Geotechnical Investigation
Prop. Multi-Storey Building - 851 Richmond Road
Ottawa, Ontario

DATUM TBM - Top of grate of catch basin (refer to Dwg. PG4163-1). Geodetic elevation = 65.24m.

FILE NO. PG4163

REMARKS

HOLE NO. BH 3

BORINGS BY CME 55 Power Auger **DATE** June 1, 2017

SOIL DESCRIPTION	STRATA PLOT	SAMPLE TYPE	SAMPLE NUMBER	SAMPLE % RECOVERY	SAMPLE N VALUE or RQD	DEPTH (m)	ELEV. (m)
GROUND SURFACE						0	65.44
Asphaltic concrete 0.09		SS	1	58	21		
FILL: Grey-brown sand, trace silt		SS	2	33	35	1	64.44
		SS	3	67	18	2	63.44
2.36		SS	4	88	50+		
GLACIAL TILL: Brown silty clay with sand, gravel, fractured rock and boulders		RC	1	94		3	62.44
		RC	2	67			
3.99		SS	5	100	50+	4	61.44
		RC	3	80	60	5	60.44
BEDROCK: Poor to excellent quality, grey limestone						6	59.44
		RC	4	100	96		
6.98							
End of Borehole							
(GWL @ 3.72m - June 8, 2017)							

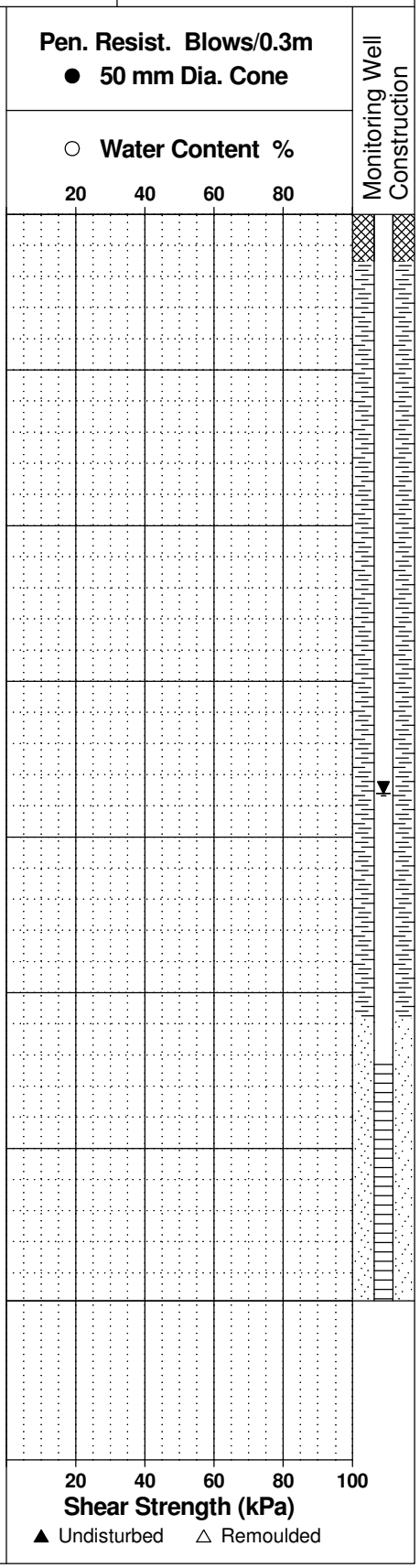

patersongroup Consulting Engineers

154 Colonnade Road South, Ottawa, Ontario K2E 7J5

SOIL PROFILE AND TEST DATA

Geotechnical Investigation
Prop. Multi-Storey Building - 851 Richmond Road
Ottawa, Ontario

DATUM TBM - Top of grate of catch basin (refer to Dwg. PG4163-1). Geodetic elevation = 65.24m.

FILE NO. PG4163

REMARKS

HOLE NO. BH 4

BORINGS BY CME 55 Power Auger **DATE** June 1, 2017

SOIL DESCRIPTION	STRATA PLOT	SAMPLE TYPE	SAMPLE NUMBER	SAMPLE % RECOVERY	SAMPLE N VALUE or RQD	DEPTH (m)	ELEV. (m)
GROUND SURFACE						0	66.05
Asphaltic concrete 0.09							
FILL: Grey-brown sand, trace silt		SS	1	75	20		
0.76							
FILL: Brown silty sand, some clay, trace gravel		SS	2	83	8	1	65.05
1.52							
GLACIAL TILL: Brown sandy silt, trace clay and gravel		SS	3	75	24	2	64.05
2.39		SS	4	100	50+		
End of Borehole							
Practical refusal to augering at 2.39m depth							
(GWL @ 2.19m - June 8, 2017)							

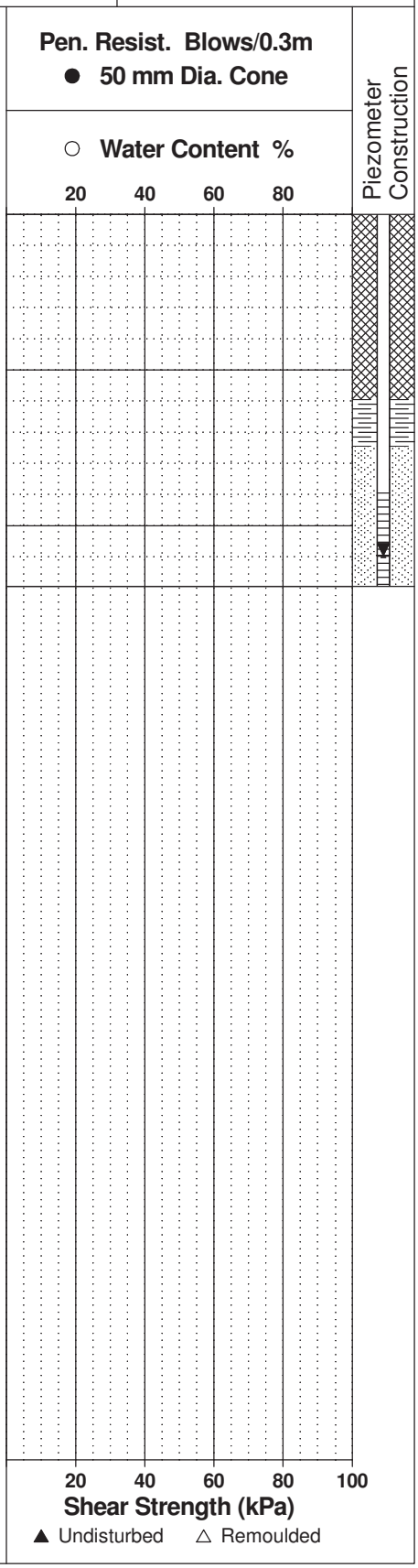

patersongroup Consulting Engineers

154 Colonnade Road South, Ottawa, Ontario K2E 7J5

SOIL PROFILE AND TEST DATA

Geotechnical Investigation
Prop. Multi-Storey Building - 851 Richmond Road
Ottawa, Ontario

DATUM TBM - Top of grate of catch basin (refer to Dwg. PG4163-1). Geodetic elevation = 65.24m.

FILE NO. PG4163

REMARKS

HOLE NO. BH 5

BORINGS BY CME 55 Power Auger **DATE** June 1, 2017

SOIL DESCRIPTION	STRATA PLOT	SAMPLE TYPE	SAMPLE NUMBER	SAMPLE % RECOVERY	SAMPLE N VALUE or RQD	DEPTH (m)	ELEV. (m)
GROUND SURFACE						0	65.79
Asphaltic concrete 0.06		SS	1	46	57		
FILL: Brown sand with gravel, trace silt and clay		SS	2	42	11	1	64.79
1.52							
GLACIAL TILL: Brown sand with gravel, trace silt 2.06		SS	3	67	39	2	63.79
		RC	1	81	21		
BEDROCK: Very poor to fair quality, grey limestone						3	62.79
		RC	2	64	40		
						4	61.79
		RC	3	100	100	5	60.79
5.72							
End of Borehole							
(GWL @ 3.20m - June 8, 2017)							

Pen. Resist. Blows/0.3m
● **50 mm Dia. Cone**
○ **Water Content %**

20 40 60 80

Monitoring Well Construction

20 40 60 80 100
Shear Strength (kPa)
▲ Undisturbed △ Remoulded

patersongroup Consulting Engineers

154 Colonnade Road South, Ottawa, Ontario K2E 7J5

SOIL PROFILE AND TEST DATA

Geotechnical Investigation
Prop. Multi-Storey Building - 851 Richmond Road
Ottawa, Ontario

DATUM TBM - Top of grate of catch basin (refer to Dwg. PG4163-1). Geodetic elevation = 65.24m.

FILE NO. PG4163

REMARKS

HOLE NO. BH 6

BORINGS BY CME 55 Power Auger **DATE** June 1, 2017

SOIL DESCRIPTION	STRATA PLOT	SAMPLE TYPE	SAMPLE NUMBER	SAMPLE % RECOVERY	SAMPLE N VALUE or RQD	DEPTH (m)	ELEV. (m)
GROUND SURFACE						0	65.56
Asphaltic concrete 0.08		SS	1	58	18		
FILL: Brown sand and gravel, trace silt		SS	2	50	45	1	64.56
		SS	3	42	17	2	63.56
2.29							
		SS	4	58	13	3	62.56
GLACIAL TILL: Brown silty sand with clay and gravel		SS	5	100	27		
		SS	6	100	52	4	61.56
4.60							
End of Borehole							
Practical refusal to augering at 4.60m depth							
(GWL @ 3.35m - June 8, 2017)							

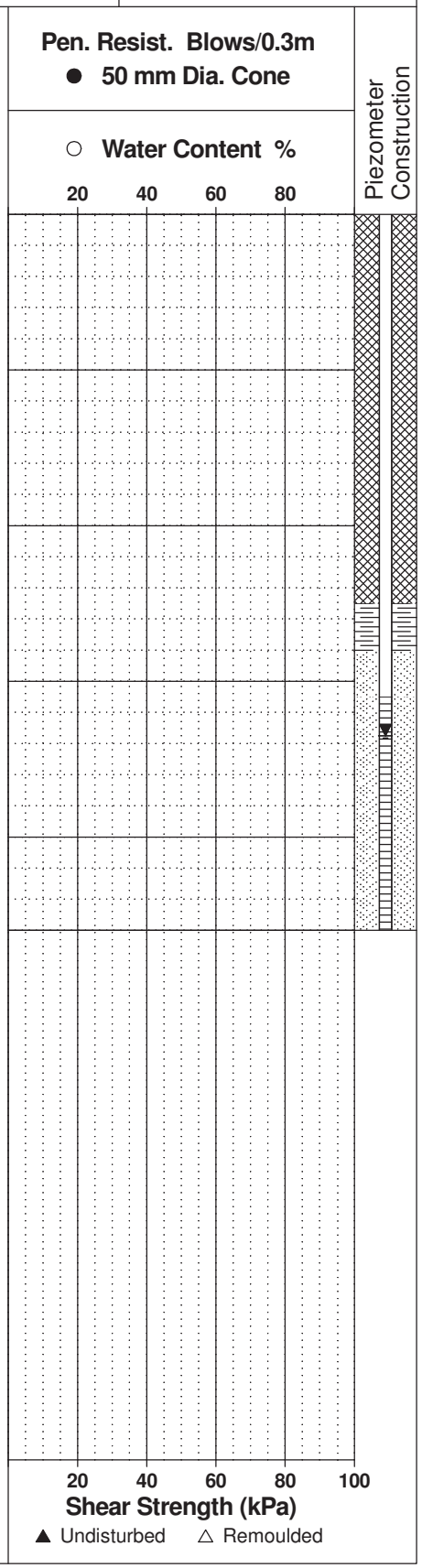

SYMBOLS AND TERMS

SOIL DESCRIPTION

Behavioural properties, such as structure and strength, take precedence over particle gradation in describing soils. Terminology describing soil structure are as follows:

Desiccated	-	having visible signs of weathering by oxidation of clay minerals, shrinkage cracks, etc.
Fissured	-	having cracks, and hence a blocky structure.
Varved	-	composed of regular alternating layers of silt and clay.
Stratified	-	composed of alternating layers of different soil types, e.g. silt and sand or silt and clay.
Well-Graded	-	Having wide range in grain sizes and substantial amounts of all intermediate particle sizes (see Grain Size Distribution).
Uniformly-Graded	-	Predominantly of one grain size (see Grain Size Distribution).

The standard terminology to describe the strength of cohesionless soils is the relative density, usually inferred from the results of the Standard Penetration Test (SPT) 'N' value. The SPT N value is the number of blows of a 63.5 kg hammer, falling 760 mm, required to drive a 51 mm O.D. split spoon sampler 300 mm into the soil after an initial penetration of 150 mm.

Relative Density	'N' Value	Relative Density %
Very Loose	<4	<15
Loose	4-10	15-35
Compact	10-30	35-65
Dense	30-50	65-85
Very Dense	>50	>85

The standard terminology to describe the strength of cohesive soils is the consistency, which is based on the undisturbed undrained shear strength as measured by the in situ or laboratory vane tests, penetrometer tests, unconfined compression tests, or occasionally by Standard Penetration Tests.

Consistency	Undrained Shear Strength (kPa)	'N' Value
Very Soft	<12	<2
Soft	12-25	2-4
Firm	25-50	4-8
Stiff	50-100	8-15
Very Stiff	100-200	15-30
Hard	>200	>30

SYMBOLS AND TERMS (continued)

SOIL DESCRIPTION (continued)

Cohesive soils can also be classified according to their “sensitivity”. The sensitivity is the ratio between the undisturbed undrained shear strength and the remoulded undrained shear strength of the soil.

Terminology used for describing soil strata based upon texture, or the proportion of individual particle sizes present is provided on the Textural Soil Classification Chart at the end of this information package.

ROCK DESCRIPTION

The structural description of the bedrock mass is based on the Rock Quality Designation (RQD).

The RQD classification is based on a modified core recovery percentage in which all pieces of sound core over 100 mm long are counted as recovery. The smaller pieces are considered to be a result of closely-spaced discontinuities (resulting from shearing, jointing, faulting, or weathering) in the rock mass and are not counted. RQD is ideally determined from NXL size core. However, it can be used on smaller core sizes, such as BX, if the bulk of the fractures caused by drilling stresses (called “mechanical breaks”) are easily distinguishable from the normal in situ fractures.

RQD %	ROCK QUALITY
90-100	Excellent, intact, very sound
75-90	Good, massive, moderately jointed or sound
50-75	Fair, blocky and seamy, fractured
25-50	Poor, shattered and very seamy or blocky, severely fractured
0-25	Very poor, crushed, very severely fractured

SAMPLE TYPES

SS	-	Split spoon sample (obtained in conjunction with the performing of the Standard Penetration Test (SPT))
TW	-	Thin wall tube or Shelby tube
PS	-	Piston sample
AU	-	Auger sample or bulk sample
WS	-	Wash sample
RC	-	Rock core sample (Core bit size AXT, BXL, etc.). Rock core samples are obtained with the use of standard diamond drilling bits.

SYMBOLS AND TERMS (continued)

GRAIN SIZE DISTRIBUTION

MC%	-	Natural moisture content or water content of sample, %
LL	-	Liquid Limit, % (water content above which soil behaves as a liquid)
PL	-	Plastic limit, % (water content above which soil behaves plastically)
PI	-	Plasticity index, % (difference between LL and PL)
Dxx	-	Grain size which xx% of the soil, by weight, is of finer grain sizes These grain size descriptions are not used below 0.075 mm grain size
D10	-	Grain size at which 10% of the soil is finer (effective grain size)
D60	-	Grain size at which 60% of the soil is finer
Cc	-	Concavity coefficient = $(D30)^2$ / (D10 x D60)
Cu	-	Uniformity coefficient = D60 / D10

Cc and Cu are used to assess the grading of sands and gravels:
Well-graded gravels have: $1 < Cc < 3$ and $Cu > 4$
Well-graded sands have: $1 < Cc < 3$ and $Cu > 6$
Sands and gravels not meeting the above requirements are poorly-graded or uniformly-graded.
Cc and Cu are not applicable for the description of soils with more than 10% silt and clay
(more than 10% finer than 0.075 mm or the #200 sieve)

CONSOLIDATION TEST

p'_o	-	Present effective overburden pressure at sample depth
p'_c	-	Preconsolidation pressure of (maximum past pressure on) sample
Ccr	-	Recompression index (in effect at pressures below p'_c)
Cc	-	Compression index (in effect at pressures above p'_c)
OC Ratio		Overconsolidaton ratio = p'_c / p'_o
Void Ratio		Initial sample void ratio = volume of voids / volume of solids
Wo	-	Initial water content (at start of consolidation test)

PERMEABILITY TEST

k	-	Coefficient of permeability or hydraulic conductivity is a measure of the ability of water to flow through the sample. The value of k is measured at a specified unit weight for (remoulded) cohesionless soil samples, because its value will vary with the unit weight or density of the sample during the test.

SYMBOLS AND TERMS (continued)

STRATA PLOT

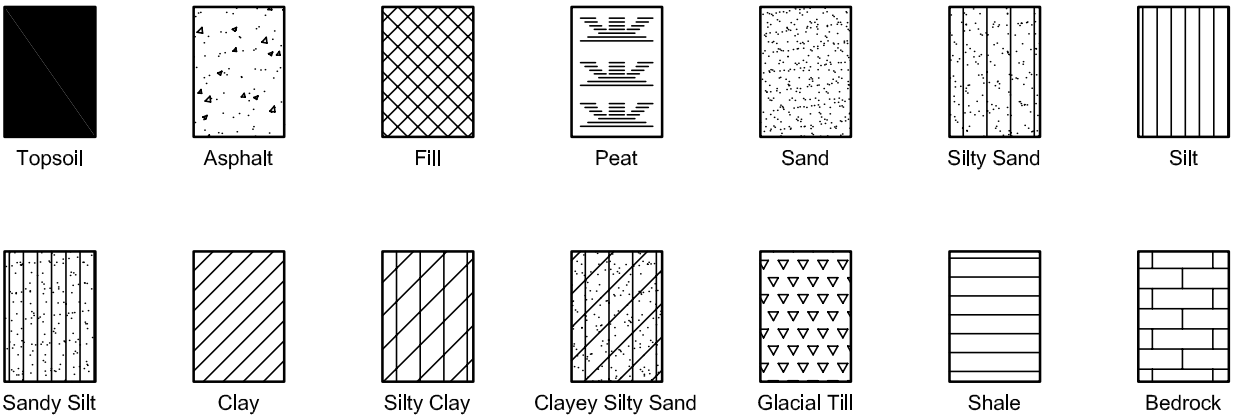

MONITORING WELL AND PIEZOMETER CONSTRUCTION

MONITORING WELL CONSTRUCTION

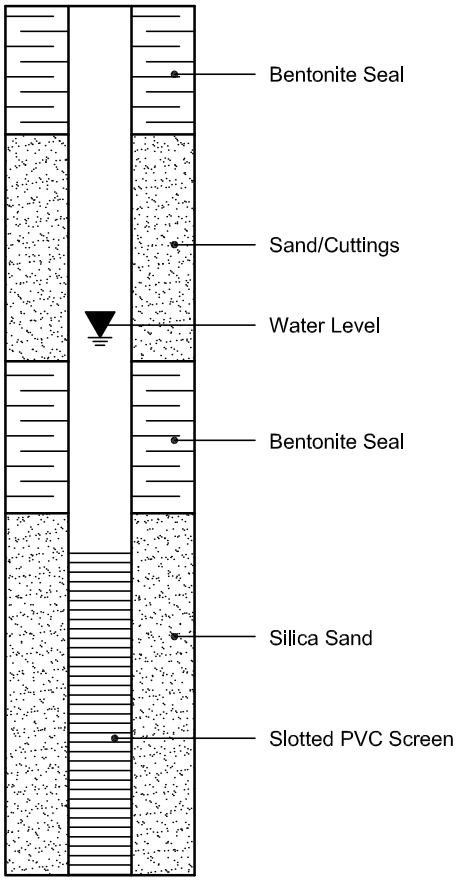

PIEZOMETER CONSTRUCTION

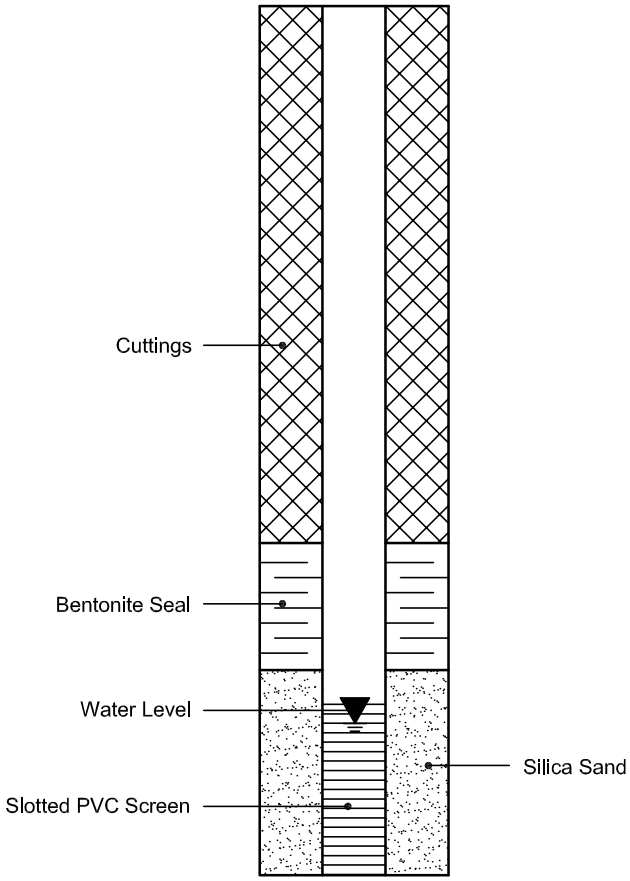

APPENDIX 2

FIGURE 1 - KEY PLAN

FIGURES 2 AND 3 - SEISMIC SHEAR WAVE VELOCITY PROFILES

DRAWING PG4163-1 - TEST HOLE LOCATION PLAN

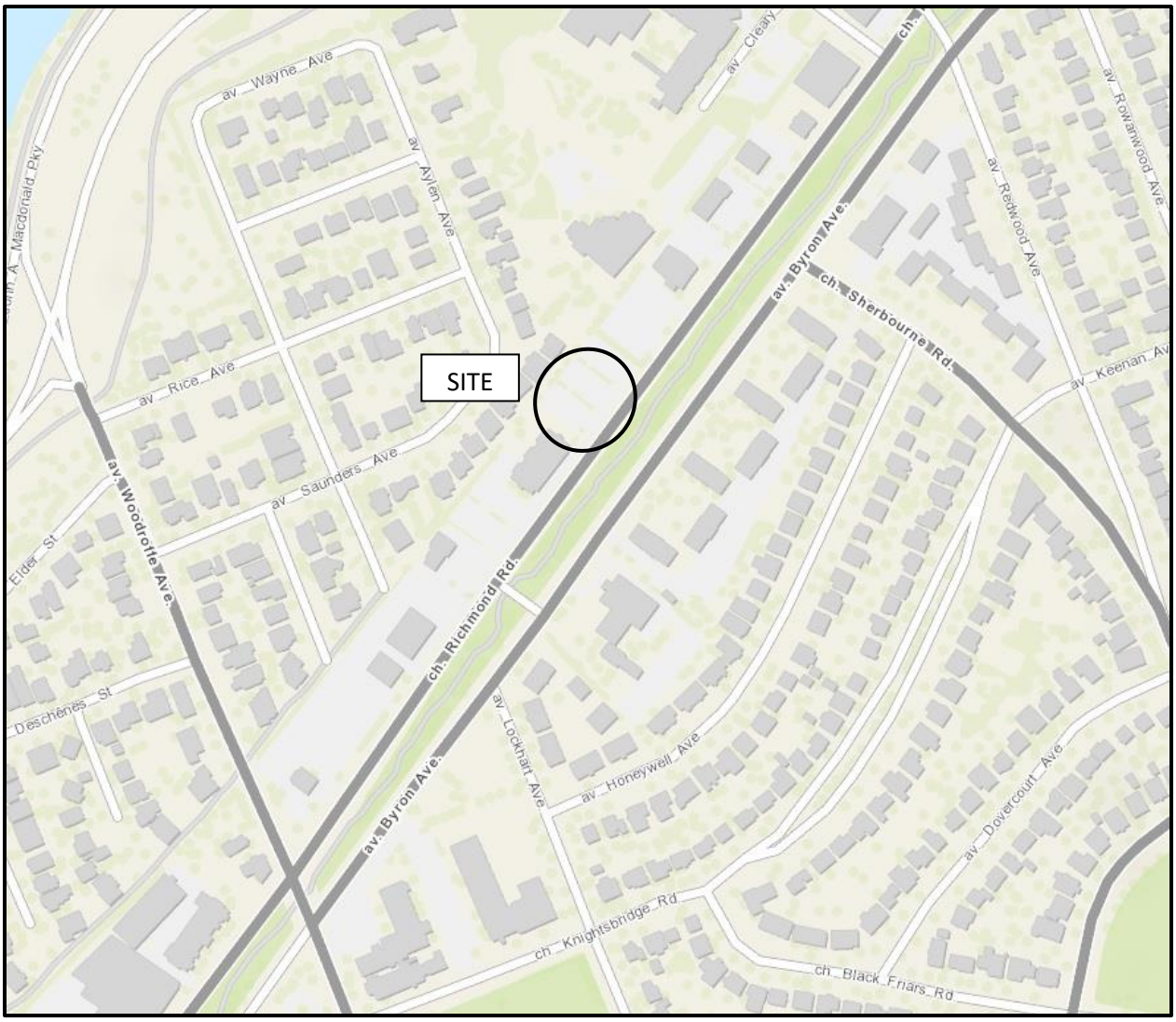

FIGURE 1

KEY PLAN

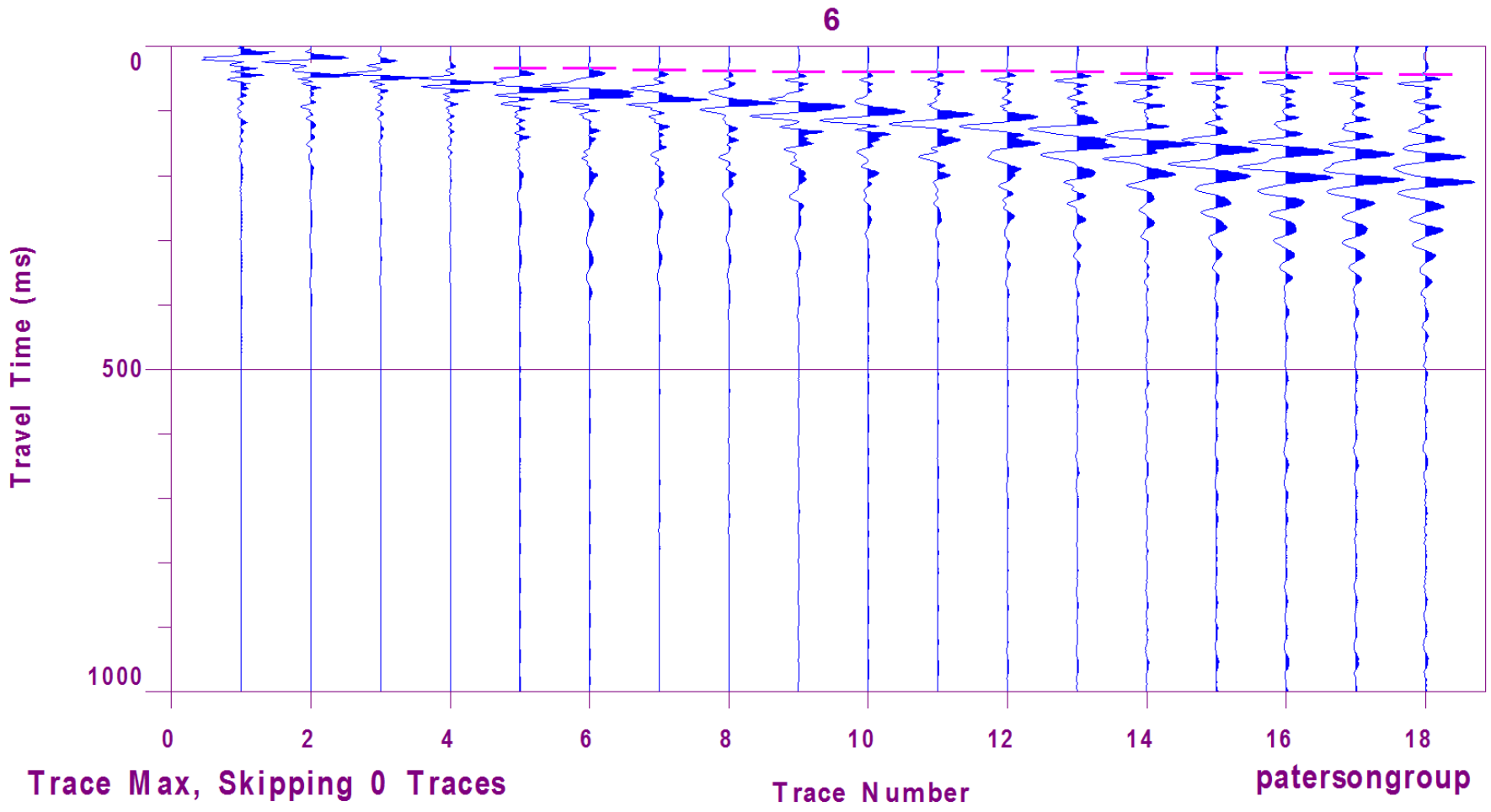

Figure 2 – Shear Wave Velocity Profile at Shot Location -3 m

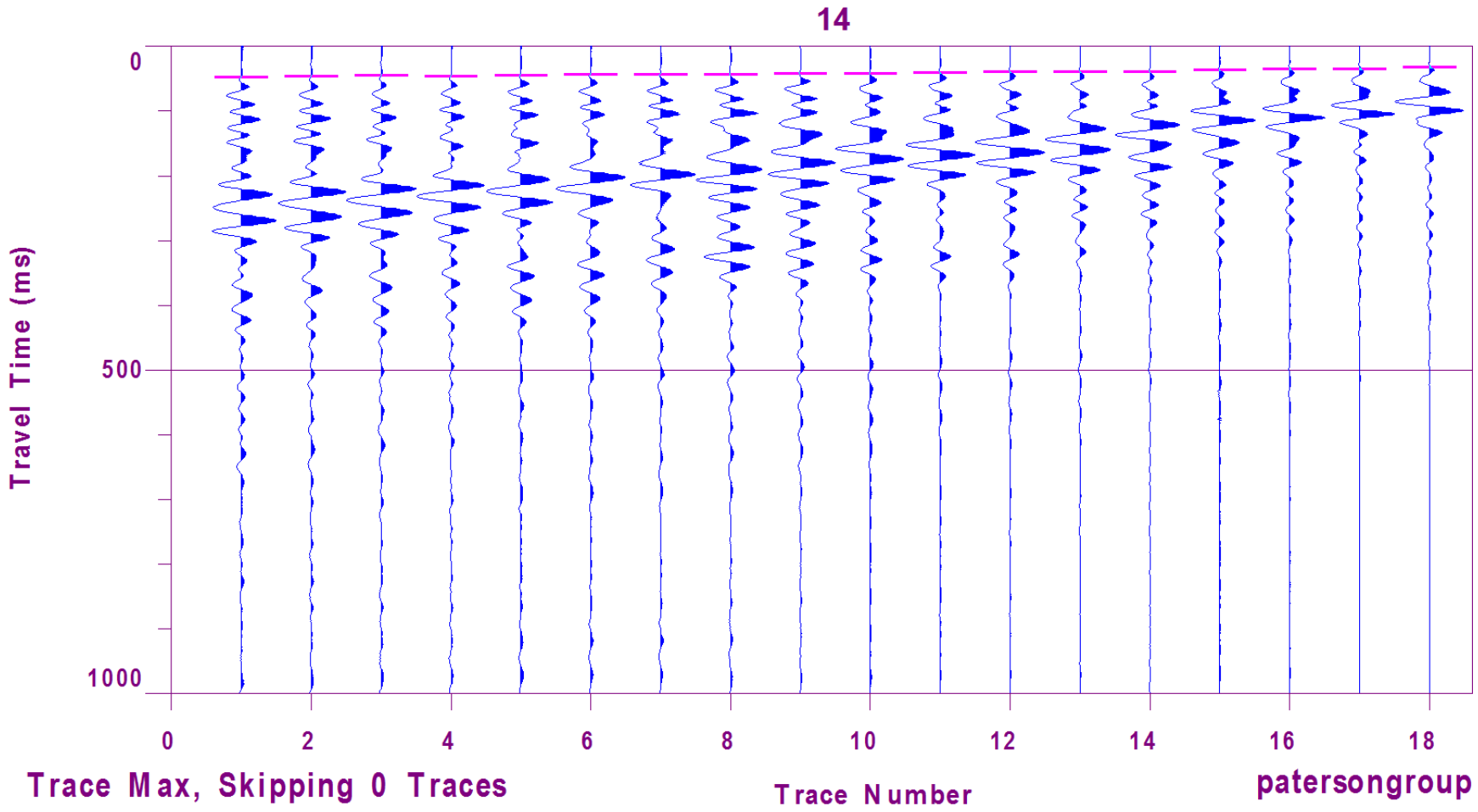

Figure 3 – Shear Wave Velocity Profile at Shot Location 48 m

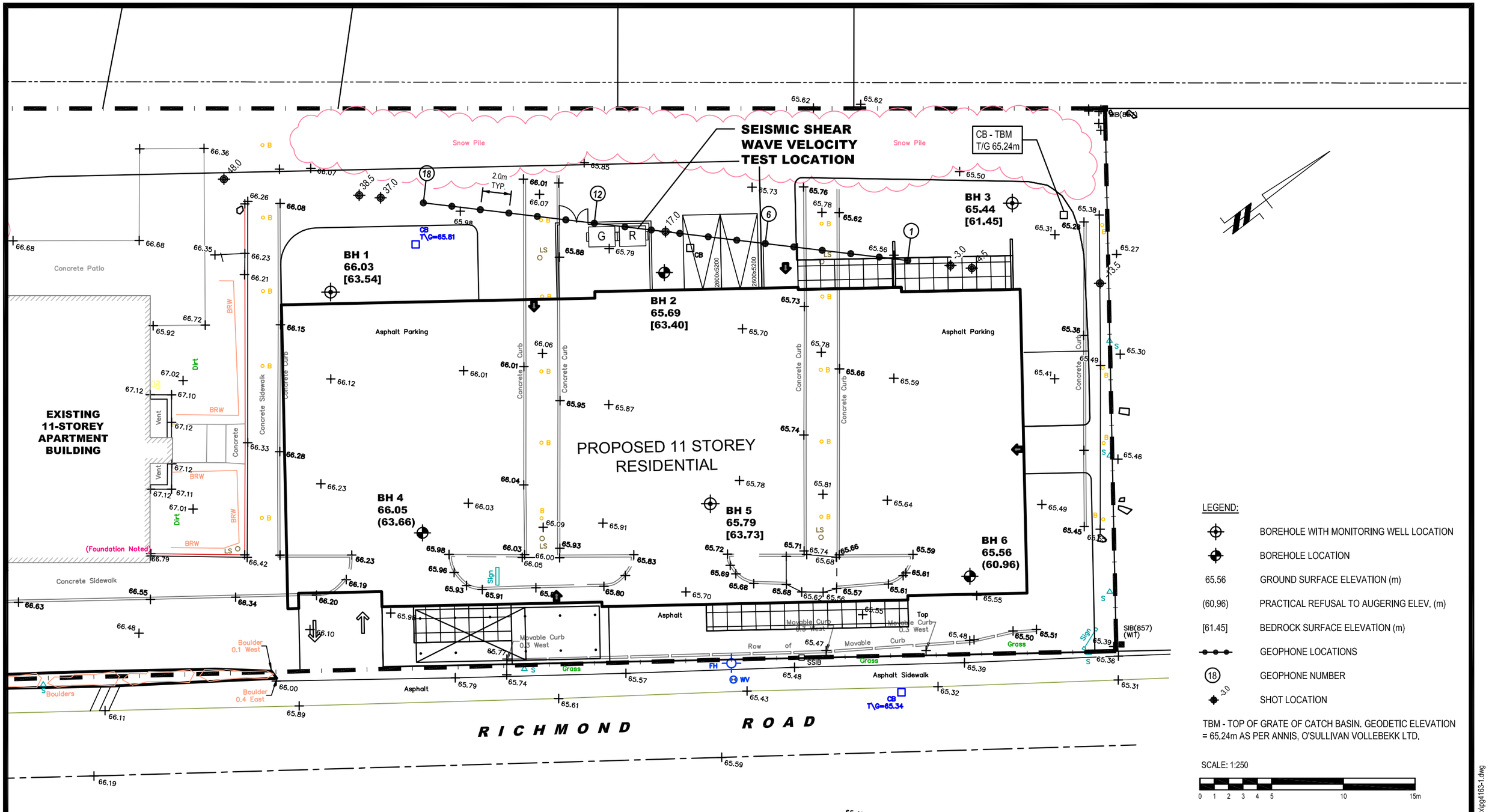

LEGEND:

- BOREHOLE WITH MONITORING WELL LOCATION
- BOREHOLE LOCATION
- 65.56 GROUND SURFACE ELEVATION (m)
- (60.96) PRACTICAL REFUSAL TO AUGERING ELEV. (m)
- [61.45] BEDROCK SURFACE ELEVATION (m)
- GEOPHONE LOCATIONS
- (18) GEOPHONE NUMBER
- -3.0 SHOT LOCATION

TBM - TOP OF GRATE OF CATCH BASIN. GEODETIC ELEVATION = 65.24m AS PER ANNIS, O'SULLIVAN VOLLEBEKK LTD.

SCALE: 1:250

0 1 2 3 4 5 10 15m

patersongroup
consulting engineers

154 Colonnade Road South
Ottawa, Ontario K2E 7J5
Tel: (613) 226-7381 Fax: (613) 226-6344

NO.	REVISIONS	DATE	INITIAL
0			

HOMESTEAD LAND HOLDINGS

GEOTECHNICAL INVESTIGATION
PROP. MULTI-STOREY BUILDING - 851 RICHMOND ROAD

OTTAWA, ONTARIO

Title:

TEST HOLE LOCATION PLAN

Scale: 1:250	Date: 06/2017
Drawn by: MPG	Report No.: PG4163-1
Checked by: NC	Dwg. No.: PG4163-1
Approved by: DJG	Revision No.: 0

p:\autocad drawings\geotechnical\pg4163-1.dwg

Appendix F CITY OF OTTAWA SERVICING STUDY CHECKLIST

Stantec

Development Servicing Study Checklist

Job#: 160401329

4.1 General Content	Addressed (Y/N/NA)	Section	Comments
Executive Summary (for larger reports only).	N/A	-	Introduction
Date and revision number of the report.	Y	-	
Location map and plan showing municipal address, boundary, and layout of proposed development.	Y	1.0	
Plan showing the site and location of all existing services.	Y		Existing Condtions Plan
Development statistics, land use, density, adherence to zoning and official plan, and reference to applicable subwatershed and watershed plans that provide context to which individual developments must adhere.	Y		Appendix B
Summary of Pre-consultation Meetings with City and other approval agencies.	N/A		
Reference and confirm conformance to higher level studies and reports (Master Servicing Studies, Environmental Assessments, Community Design Plans), or in the case where it is not in conformance, the proponent must provide justification and develop a defendable design criteria.	N/A		
Statement of objectives and servicing criteria.	Y		In each section
Identification of existing and proposed infrastructure available in the immediate area.	Y		In each section
Identification of Environmentally Significant Areas, watercourses and Municipal Drains potentially impacted by the proposed development (Reference can be made to the Natural Heritage Studies, if available).	N/A		
Concept level master grading plan to confirm existing and proposed grades in the development. This is required to confirm the feasibility of proposed stormwater management and drainage, soil removal and fill constraints, and potential impacts to neighbouring properties. This is also required to confirm that the proposed grading will not impede existing major system flow paths.	N/A		
Identification of potential impacts of proposed piped services on private services (such as wells and septic fields on adjacent lands) and mitigation required to addresspotential impacts.	N/A		
Proposed phasing of the development, if applicable.	N/A		
Reference to geotechnical studies and recommendations concerning servicing.		9.0	Report and Appendix
All preliminary and formal site plan submissions should have the following information:			
Metric scale	Y		Appendix G Drawings
North arrow (including construction North)	N/A		Appendix G Drawings
Key plan	Y		Appendix G Drawings
Name and contact information of applicant and property owner	Y		Appendix G Drawings
Property limits including bearings and dimensions	Y		Appendix G Drawings
Existing and proposed structures and parking areas	Y		Appendix G Drawings
Easements, road widening and rights-of-way	Y		Appendix G Drawings
Adjacent street names	Y		Appendix G Drawings

4.2 Water	Addressed (Y/N/NA)	Section	Comments
Confirm consistency with Master Servicing Study, if available	N/A	3.0	
Availability of public infrastructure to service proposed development	Y	3.0	
Identification of system constraints	Y	3.0	
Identify boundary conditions	Y	3.0	
Confirmation of adequate domestic supply and pressure	Y	3.0	

Confirmation of adequate fire flow protection and confirmation that fire flow is calculated as per the Fire Underwriter's Survey. Output should show available fire flow at locations throughout the development.		3.0	Appendix A
Provide a check of high pressures. If pressure is found to be high, an assessment is required to confirm the application of pressure reducing valves.	Y	3.0	
Definition of phasing constraints. Hydraulic modeling is required to confirm servicing for all defined phases of the project including the ultimate design.	N/A		
Address reliability requirements such as appropriate location of shut-off valves	N/A		
Check on the necessity of a pressure zone boundary modification.	N/A		
Reference to water supply analysis to show that major infrastructure is capable of delivering sufficient water for the proposed land use. This includes data that shows that the expected demands under average day, peak hour and fire flow conditions provide water within the required pressure range		3.0	
Description of the proposed water distribution network, including locations of proposed connections to the existing system, provisions for necessary looping, and appurtenances (valves, pressure reducing valves, valve chambers, and fire hydrants) including special metering provisions.	Y	3.0	
Description of off-site required feedermains, booster pumping stations, and other water infrastructure that will be ultimately required to service proposed development, including financing, interim facilities, and timing of implementation.	Y	3.0	
Confirmation that water demands are calculated based on the City of Ottawa Design Guidelines.	Y	3.0	
Provision of a model schematic showing the boundary conditions locations, streets, parcels, and building locations for reference.	N/A		
4.3 Wastewater	**Addressed (Y/N/NA)**	**Section**	**Comments**
Summary of proposed design criteria (Note: Wet-weather flow criteria should not deviate from the City of Ottawa Sewer Design Guidelines. Monitored flow data from relatively new infrastructure cannot be used to justify capacity requirements for proposed infrastructure).	Y	4.0	
Confirm consistency with Master Servicing Study and/or justifications for deviations.	N/A		
Consideration of local conditions that may contribute to extraneous flows that are higher than the recommended flows in the guidelines. This includes groundwater and soil conditions, and age and condition of sewers.	N/A		
Description of existing sanitary sewer available for discharge of wastewater from proposed development.	Y	4.0	
Verify available capacity in downstream sanitary sewer and/or identification of upgrades necessary to service the proposed development. (Reference can be made to previously completed Master Servicing Study if applicable)	Y	4.0	Appendix C
Calculations related to dry-weather and wet-weather flow rates from the development in standard MOE sanitary sewer design table (Appendix 'C') format.	Y	4.0	Appendix C
Description of proposed sewer network including sewers, pumping stations, and forcemains.	Y	4.0	
Discussion of previously identified environmental constraints and impact on servicing (environmental constraints are related to limitations imposed on the development in order to preserve the physical condition of watercourses, vegetation, soil cover, as well as protecting against water quantity and quality).	N/A		
Pumping stations: impacts of proposed development on existing pumping stations or requirements for new pumping station to service development.	N/A		

Forcemain capacity in terms of operational redundancy, surge pressure and maximum flow velocity.	N/A		
Identification and implementation of the emergency overflow from sanitary pumping stations in relation to the hydraulic grade line to protect against basement flooding.	N/A		
Special considerations such as contamination, corrosive environment etc.	N		
4.4 Stormwater	**Addressed (Y/N/NA)**	**Section**	**Comments**
Description of drainage outlets and downstream constraints including legality of outlets (i.e. municipal drain, right-of-way, watercourse, or private property)	Y	5.0	
Analysis of available capacity in existing public infrastructure.	N		
A drawing showing the subject lands, its surroundings, the receiving watercourse, existing drainage patterns, and proposed drainage pattern.	Y		Existing Conditions Plan
Water quantity control objective (e.g. controlling post-development peak flows to pre-development level for storm events ranging from the 2 or 5 year event (dependent on the receiving sewer design) to 100 year return period); if other objectives are being applied, a rationale must be included with reference to hydrologic analyses of the potentially affected subwatersheds, taking into account long-term cumulative effects.	Y	5.0	Appendix D
Water Quality control objective (basic, normal or enhanced level of protection based on the sensitivities of the receiving watercourse) and storage requirements.	Y	5.0	Appendix D
Description of the stormwater management concept with facility locations and descriptions with references and supporting information.	Y	5.0	Appendix D
Set-back from private sewage disposal systems.	N/A		
Watercourse and hazard lands setbacks.	N/A		
Record of pre-consultation with the Ontario Ministry of Environment and the Conservation Authority that has jurisdiction on the affected watershed.	N		
Confirm consistency with sub-watershed and Master Servicing Study, if applicable study exists.	N/A		
Storage requirements (complete with calculations) and conveyance capacity for minor events (1:5 year return period) and major events (1:100 year return period).	Y	5.0	Appendix D
Identification of watercourses within the proposed development and how watercourses will be protected, or, if necessary, altered by the proposed development with applicable approvals.	N		
Calculate pre and post development peak flow rates including a description of existing site conditions and proposed impervious areas and drainage catchments in comparison to existing conditions.	Y	5.0	Appendix D
Any proposed diversion of drainage catchment areas from one outlet to another.	N/A		
Proposed minor and major systems including locations and sizes of stormwater trunk sewers, and stormwater management facilities.	N/A		
If quantity control is not proposed, demonstration that downstream system has adequate capacity for the post-development flows up to and including the 100-year return period storm event.	N/A		
Identification of potential impacts to receiving watercourses	N/A		
Identification of municipal drains and related approval requirements.	N/A		
Descriptions of how the conveyance and storage capacity will be achieved for the development.	Y	5.0	Appendix D
100 year flood levels and major flow routing to protect proposed development from flooding for establishing minimum building elevations (MBE) and overall grading.	N		
Inclusion of hydraulic analysis including hydraulic grade line elevations.	N		

Description of approach to erosion and sediment control during construction for the protection of receiving watercourse or drainage corridors.	Y	5.0	
Identification of floodplains – proponent to obtain relevant floodplain information from the appropriate Conservation Authority. The proponent may be required to delineate floodplain elevations to the satisfaction of the Conservation Authority if such information is not available or if information does not match current conditions.	N/A		
Identification of fill constraints related to floodplain and geotechnical investigation.	N/A		
4.5 Approval and Permit Requirements	**Addressed (Y/N/NA)**	**Section**	**Comments**
Conservation Authority as the designated approval agency for modification of floodplain, potential impact on fish habitat, proposed works in or adjacent to a watercourse, cut/fill permits and Approval under Lakes and Rivers Improvement Act. The Conservation Authority is not the approval authority for the Lakes and Rivers Improvement Act. Where there are Conservation Authority regulations in place, approval under the Lakes and Rivers Improvement Act is not required, except in cases of dams as defined in the Act.	N/A		
Application for Certificate of Approval (CofA) under the Ontario Water Resources Act.	N/A		
Changes to Municipal Drains.	N/A		
Other permits (National Capital Commission, Parks Canada, Public Works and Government Services Canada, Ministry of Transportation etc.)	N/A		
4.6 Conclusion	**Addressed (Y/N/NA)**	**Section**	**Comments**
Clearly stated conclusions and recommendations	Y	10.0	
Comments received from review agencies including the City of Ottawa and information on how the comments were addressed. Final sign-off from the responsible reviewing agency.	Y		Comment Response Letter Included Appendix H
All draft and final reports shall be signed and stamped by a professional Engineer registered in Ontario	Y		

Appendix G CORRESPONDENCE

File Number: D07-12-17-0135

December 14, 2017

FOTENN
223 McLeod Street
Ottawa, ON K2P 0Z8
Attn: Stephanie Morris

Sent via email to [morris@fotenn.com]

Dear Ms. Morris,

Re: Site Plan Control Comments – 851 Richmond Road

The following review comments are provided in response to the submission of the Site Plan Control application (D07-12-17-0135) for 851 Richmond Road. Please coordinate the changes made in response to the comments below across all plans as applicable.

City of Ottawa

Planning

General

1. Please add the file number (D07-12-17-0135) and approval block on all plans, as shown below.

APPROVED ☐	**REFUSED** ☐
THIS _____ DAY OF _____, 20____	
_____	
DERRICK MOODIE, MANAGER **DEVELOPMENT REVIEW WEST** **PLANNING, INFRASTRUCTURE AND ECONOMIC DEVELOPMENT DEPARTMENT, CITY OF OTTAWA**	



2. All plans and drawings should be dimensioned in the metric system instead of imperial measurements.

Site Plan

1. Please include the architect's seal.
2. Please provide a key plan showing the subject site's location on an aerial photograph.
3. Provide the legal description of the subject property, as well as the survey information used for the base plan.
4. Please including a zoning information table which includes all provisions of the R5C H(33) zoning applicable to the site, and the proposed values. This should include, but is not limited to, Parts 2, 4, 5, and 6 of the Zoning By-law. An example is provided below.

ZONING		
EXISTING ZONING	IL [1559] LIGHT INDUSTRIAL	
	REQUIRED	PROPOSED
MIN. FRONT YARD SETBACK	7.5m	15.0m
MIN. REAR YARD SETBACK	7.5m	57.0m
MIN. INTERIOR YARD SETBACK	7.5m	8.2m
MAX. BUILDING HEIGHT	18.0m	±5.1m
MIN. LOT AREA	2,000m2	13,507m2
MAX LOT COVERAGE	65%	26%
MAX. FLOOR SPACE INDEX	2	2
MIN. WIDTH OF LANDSCAPE AREA		

5. Please identify all building entrances; four entrances are not shown on the northern frontage.
6. Please identify the location of the two-way site access on the western portion of the site. As well, please consider providing a landscaped buffer to screen the surface parking lot from Byron Street and to provide a more positive pedestrian experience.
7. Please separate the calculations for resident and visitor parking totals and appropriately label the visitor parking spaces. If visitor parking is to be provided in the underground garage, please explain how secure access will function.
8. Please explain your rationale behind the central one-way access immediately to the west of the parking garage entrance. An additional one-way access is proposed on the eastern edge of the site; please consider removing the centre access and provide additional landscaping.
9. The eastern driveway does not meet the 3 m minimum width required; please remove the bike lane, as it is not necessary within the site.
10. If visitor parking is provided at the surface parking lot, pedestrian connectivity to the new building must be improved. Ensure that a continuous pathway is provided to link the surface lot with the new internal pathways proposed.
11. The covered entry walkway extends too far into the front yard setback. Per s. 65 of the Zoning By-law, the canopy may project 1.5 m into the front yard, but not closer than 0.6 m to the lot line.
12. Please provide a detail drawing of the two proposed garbage enclosures, and show the enclosures on the site plan. Consider adding a roof to the enclosures to screen the garbage and recycling bins.

13. The two parking spaces provided on the northern edge of the building are immediately adjacent to the “Move In & Storage Area.” The two spaces provided are not large enough to accommodate mid-sized moving trucks (7 m length), which may result in the drive aisle being obstructed. Please reconfigure this area to accommodate moving vehicles (sketch provided below).

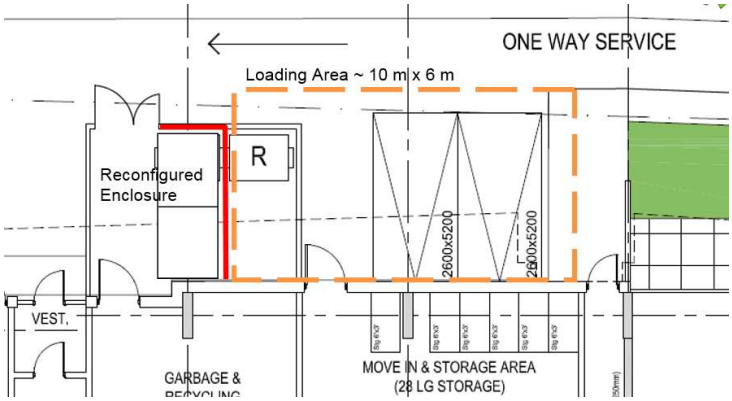

14. Bicycle parking comments:

    a. Per s. 100, bicycle parking spaces must be set aside for and used exclusively for that purpose. Therefore, storage lockers cannot be counted towards the bicycle parking total unless they are labelled as such, and dimensioned per s. 111.

    b. The highlighted bicycle parking spaces do not meet the minimum size required per s. 111. Please correct, and identify what type of racks or locking points will be provided.

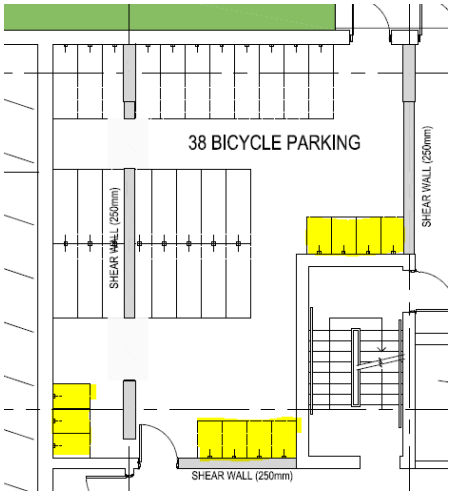

    c. Please provide outdoor bicycle racks for the use of visitors.

15. Please extend the northern concrete walkway to the west and south to the rear entrance.

16. Please delineate the extent of the underground parking garage on the plan.

17. Is any lighting proposed for the pathways at the rear of the building? If so, please identify it on the plan.

18. All depressed curbs must be shown on the Site Plan.

19. Is any fencing proposed along the eastern property line?

Urban Design

Site Plan/Landscape Plan:

1. Is there adequate soil volumes for the trees proposed above the parking garage at the rear of the site?
2. Entrance to the parking garage – relocate to the rear of side of the building to eliminate the additional crossing of the sidewalk on Richmond Road.
3. What treatment is proposed in front of the surface parking lot that is being retained? Access to this parking lot should be limited to one location with proper access. A landscape buffer should be provided across the frontage of this parking lot in accordance with Zoning By-law standards.
4. Label all hard surface area by material proposed – concrete, asphalt, pavers etc.
5. Why is such a large garbage and recycling area proposed at the rear of the building?
6. Is an enclosure proposed for the garbage for the existing building? If so what is proposed?
7. Is the fenced enclosure required at the rear of the new building as there is a garbage room at grade?

Elevations / Built Form

1. Clearly define a base, middle and top for the building.
2. Increase the height of the base of the building through external treatment including the second floor.
3. Treatment of balconies should be re-considered. General concern that this building and the existing building can be read as one very long slab building. The approach to balconies may assist in creating two distinct looking buildings.
4. Separation distance between the two buildings is not ideal and does not meet high rise design guidelines. Consideration should be given to increase this distance to the greatest extent possible.
5. The material proposed for the base of the building should be clearly identified on the elevations.

Urban Design Review Panel

These are notes taken by City staff during the meeting; formal notes from the Panel will follow.

1. The overall design of the building is very similar to that of the adjacent structure. Please differentiate the proposed development with a unique design.
2. The ground floor appears to be very squat and compressed; please improve the base of the building.
3. Treat each of the four facades in a slightly different manner; the south façade especially needs improvement. Give the slot more emphasis, possibly by aligning the entrance with it.
4. Be careful not to create a pock-marked façade through the use of panelling.
5. The north façade needs to be calmer for the adjacent residents; decrease the visual noise by insetting the balconies.

6. The east façade should include more balconies and glazing.
7. The building should have a defined base, middle, and top. Adjust the treatment of the upper floors to break the boxy massed form.
8. Consider grouping and framing the balconies.
9. Relocate the parking garage entrance to the back of the building, to minimize pedestrian conflicts.
10. Please integrate sustainable design into the building, perhaps with a green roof.

Engineering

General

1. All exterior light fixtures must be included and approved as part of the site plan approval. Therefore, the lights must be clearly identified by make, model and part number. All external light fixtures must meet the criteria for full cut-off classification as recognized by the Illuminating Engineering Society of North America (IESNA or IES), and must result in minimal light spillage onto adjacent properties (as a guideline, 0.5 fc is normally the maximum allowable spillage). In order to satisfy these criteria, the applicant must provide certification from an acceptable professional engineer. The location of all exterior fixtures, a table showing the fixture types (including make, model, part number), and the mounting heights must be included on one of the plans.
2. Is there any easement on this property? If so, please clearly show and label all the easement(s) on all plans. Please provide a copy of the easement document.
3. Please note that additional review fees will be applicable for the 4th and subsequent reviews.
4. The City file number for this application is D07-12-17-0135. Please place this number on all drawings (bottom right side –vertically outside the border).
5. The City plan number of this application is 17519. Please place this number on all drawings, horizontally at the bottom right side (Plan No. 17519).
6. Please complete the attached Fire Route Form and send to Jennifer.Therkelsen@ottawa.ca after the fire route has been confirmed by Allan.Evans@ottawa.ca in order to add the fire route to the By-law. Please cc myself and the file lead as confirm that the form has been submitted.
7. Clearly show the property line on all drawings, on all sides of the property and add the line style in the legend.
8. Please provide a full size drainage area plan for the existing condition for the entire site. On this plan, show the drainage area and runoff coefficient for each sub-catchment area. Also, add the overland flow route arrows on this plan. Provide a detailed composite runoff coefficient (c) calculation for each of the sub-catchment area and include it in the Appendix of the Site Servicing and Stormwater Management Brief. Clearly show and label the stormwater conveyance system outside the property line of this site.
9. Based on the available information, the downstream public stormwater conveyance system was designed and constructed prior to the year 1970 and assumed to be designed to

convey the 2-year flow. Therefore, the runoff from the expansion/redevelopment area must be controlled to the 2-year pre-development condition with C=0.5.

10. As per discussion with the City Legal services, the owner/applicant has no rights to outlets the stormwater runoff to a private property on the north side, without any easement or legal agreement with the adjacent property owner. In order to outlet and to convey flow through a private land, please obtain an easement and enters into a joint use and maintenance agreement with the adjacent property owner(s).

Site Servicing and Stormwater Management Brief

1. Section 4.0; paragraph 3 talks about DSEL's report that analyzed the capacity of the sanitary sewer on Richmond Road. Please include excerpts from this report to show the existing sanitary sewer on Richmond Rd. has additional capacity to receive sanitary flow from the proposed building.
2. Section 5.2, paragraph 1; sentence 2 states that existing 375 mm diameter CSP discharges into an existing ditch in the existing Children's Centre to the north. However, what is shown on drawing no. EX-1 does not agree with the description. Please review and revise. Do you have permission to convey stormwater through the adjacent property on the north (Children's Centre)?
3. Section 5.2, paragraph 1; sentence 3 talks about a 15 m long conveyance ditch. Who owns and maintains this ditch? If the portion of the conveyance system is owned and maintained by a private entity and do not have an agreement with the adjacent property owner, an alternative outlet is required for the proposed development.
4. Section 5.3; the stormwater management criteria that summarized in this section does not quite match the criteria that was given to you by the previous City project manager. Review and revise.
5. Section 5.4; It appears that the proposed oil and grit separator is only providing the quality treatment for the runoff from the proposed development area. Please explain the reason for not providing the quality treatment for the runoff from the existing area in the south? Please consult with the Conservation Authority to confirm whether this approach is acceptable to them.
6. Provide detailed calculations to show how the composite runoff coefficient (C) of the existing site is determined.
7. Section 5.4.4.2; sentence 1 states that it is proposed to detain stormwater within a 20 m3 cistern below grade with a maximum controlled release rate of 29.7 L/s to the gravity service provided. It is not clear how you are controlling this release rate. Please elaborate.
8. Section 5.4.4 talks about rooftop storage and subsurface (cistern) storage. However, there is no discussion about surface storage provided on the north and west side of the proposed building as shown on the Grading Plan. Please review and revise.
9. Please provide stormwater management for the entire site, not just the expansion area (.31 ha).

Site Servicing Plan

1. There are 2 proposed catch basins (CB 201 & CB 202) shown west of the proposed building. However, there are no catch basin leads shown on the plan to convey the stormwater captured by the CBs. Review and revise.

2. Please show the storm sewers that conveys stormwater from the underground cistern to the outlet.

Storm Drainage Plan

1. Is there a reason for redirecting the minor flow from the south of the property to the internal plumbing of the proposed building?
2. A drainage area shown at the north-west corner of the property does not have an identification no., drainage area nor runoff coefficient. Please provide.
3. Drainage area of the ramp shown as 0.00. Please review and revise.

Grading Plan

1. Provide at least 0.3 m freeboard between the high point at the underground parking entrance and the gutter elevation at the north side of Richmond Road to prevent the gutter flow from entering the parking garage.
2. It is not clear whether the large flow arrows shown on the plan and in the legend represents major overland flow route or not. Since the post-development runoff for the 1:100year storm event will be controlled to the calculated allowable release rate, no major overland flow route is required for the expansion area; only emergency overland flow route is required. Therefore, please revise the text associated with the large flow arrow shown in the legend. Major overland flow route is only required for the existing building and the surrounding area (outside the expansion area).
3. There are two pavement designs (car parking areas and local roads) shown on this plan. Clearly delineate these 2 areas with different hatchings.

Transportation

Traffic Engineering

1. The volumes used in the analysis do not reflect current conditions. WB volumes appear statistically low and SB left turn volumes statistically high (PM count). Although not demonstrated in the Synchro Analysis, the WB queues from Richmond Road /Woodroffe Avenue may block the site access during PM peak periods. This should be reviewed and documented.
2. Richmond Road corridor will be redesigned as part of Stage 2 LRT and traffic conditions will be significantly changed.

Street Lighting

1. No comments with initial Transportation Brief and Site Plan for this circulation. Street Lighting reserves the right to make future comments based on subsequent submissions.
2. Future considerations are as follows:
3. If there are any proposed changes to the existing roadway geometry, the City of Ottawa Street Light Asset Management Group is required to provide a full street light design. Upon completion of proposed roadway geometry design changes, please submit digital Micro Station drawings with proposed roadway geometry changes to the Street Lighting Department, so that we may proceed with the detailed street light design and coordination with the Street Light maintenance provider and all necessary parties. Be advised that the

applicant will be 100% responsible for all costs associated with any Street Light design because of the roadway geometry change.

4. Existing underground streetlight plant at this location. Street light plant must be maintained and protected at all times. Please maintain a minimum of 0.6 m horizontal and 0.3 m vertical clearance from existing street light underground plant. Please maintain a minimum 1.5 m horizontal clearance from all existing street light surface features.
5. Alterations and/or repairs are required where the existing street light plant is directly, indirectly or adversely affected by the scope of work under this circulation, due to the proposed road reconstruction process. All street light plant alterations and/or repairs must be performed by the City of Ottawa's Street Light maintenance provider.
6. Be advised that the applicant will be 100% responsible for all costs associated with any relocations/modifications to the existing street light plant.
7. Please contact Ontario One Call for locates prior to excavation.
8. Please contact Iain Brock who can be reached at 613-580-2424 extension 15885.

Transportation Engineering Services

1. A site in a Transit Oriented Development (TOD) area is an excellent candidate for submission of the new multi-modal TIA guidelines.
2. Although Richmond Road is a spine route, the report does not propose any cycling infrastructure upgrades for the frontage. In addition, with the planned reconstruction of Richmond Road in this area following construction of the LRT Stage 2 works, the north side will include cycle tracks. This should be documented in the report and there may be some resulting impact along the site frontage and across the accesses.
3. The mode shares used in the report are not appropriate for a TOD area. Future mode shares should include 65% transit use. The 1.5% growth rate used for the trip generation growth rate should be explained in detail.
4. There is a ROW protection on Richmond Road.
5. The two-way underground garage access must be 6.7m wide.

Development Review – Transportation Engineering Services

1. Show the line work (sidewalk, curbs, pavement markings etc) for Richmond Road.
2. Show curb radii.
3. Show all lane widths, including the bike lane, and sidewalk widths.
4. The entrance to the parking garage and the lane between the two buildings in in contravention of the Private Approach By-law; requires a minimum of 9 m between any two way vehiclur acces and a one away access. Section 25 (f).
5. The site plan shows two one-way entrance in for the surface lot; how do the cars get out?
6. The garbage facilities at the back of the proposed building will need to conform to Part 4 – Parking, Queuing and Loading Provisions of the Zoning By-law Table 113B for aisle width of loading spaces at 90 degrees (9m).
7. It should be demonstrated how the site plan will work with the LRT Stage 2 works.

8. Other developments – a 14-story development is being proposed at 929 Richmond Rd, this should be considered.
9. Is a separated EB turning lanes required to accommodate the traffic into this site from Richmond?

Noise & Vibration

1. Section 7.0 and 7.3 last paragraphs - These two paragraphs must be revised; they refer to "minimizing the amount of noise on any Outdoor Living Area" and "It is not anticipated that earth berms or sound barriers will be required for this development". It is stated in sections 2.0 and 7.1 that there are no dedicated Outdoor Living Area, therefore the two previous statements should not be included. Earth berms or sound barriers are only to mitigate noise for Outdoor Living Areas.
2. Will there be any exposed mechanical equipment on this building? Is there any exposed mechanical equipment in the vicinity that ay affect the tenants of this building? If so, then a stationary noise analysis is required. Otherwise the section about Stationary Noise in section 3.0 should be removed.
3. Stamson Calculations and Table 10 – Please clarify what the 10m barrier is.
4. Provide a map that displays the distances and angle between the receivers and the sources.

Forestry

1. A tree permit is needed prior to tree removal; one will be provided once the submitted tree-related materials are approved.
2. A plan is required that links the tree numbers in the tree inventory report to the site – we need to know where each tree is. Please indicate on the plan which trees are to be removed and which are to be retained.
3. The submitted materials must also account for any trees on neighboring properties that have a critical root zone extending onto the development area.
4. All City-owned trees must be identified.
5. Tree protection fencing must be shown around all retained trees that are close to the area that is being developed.

Building Code Services

1. The maximum distance a fire hydrant is permitted to be from the building's fire department connection is 45 metres, and shall be along an unobstructed path of travel, as per Article 3.2.5.16. via 3.2.5.5., of the Ontario Building Code. Unfortunately, BCSB was unable to identify the location of the fire department connection, in order to verify the design as being O.B.C. compliant in this regard.
2. Note: as indicated on the provided site plan, the existing building at 851 Richmond is shown on the new site plan to have the access lane in front of the building removed for road widening and so on. Please insure that the Fire Department Connection (F.D.C.) located at on the west end at the south portion of the wall is still in compliance with the O.B.C. for fire

access routes and unobstructed path of travel for the firefighters from the hydrant to the F.D.C.

3. Please be aware that as shown on the drawings submitted for Site Plan Control Approval, the location of the building on-site may require shoring during the construction stage and possibly permanent encroachment consent. If so, please contact The ROW Permit Office (Right Of Way) at 613-580-2424 x16000 to enquire/obtain a temporary and/or permanent encroachment letter as the shoring is to be adjacent to city property.

Waste Collection Services

1. Please dimension the garbage room.
2. A 6-meter access way is required for waste collection vehicles, or containers will have to be pulled to the closest accessible area.
3. This location will get City container service; the following containers are required:

   Garbage: 4 x 4 yard bins

   Fibre: 1 x 4 yard bin

   Glass metal plastic: 1 x 2 yard bin

   Organics: 2 x 240L carts

External Agencies

Ottawa Catholic School Board

1. The Ottawa Catholic School Board has no objection to the proposed site plan control proposal for the property located at 851 Richmond Road.

Hydro Ottawa

1. The Owner is advised that there is medium voltage underground infrastructure along the South/East side of the property.
   a. Prior to the commencement of any excavation, the Owner shall arrange for an underground cable locate by contacting Ontario One Call at 1-800-400-2255, not less than seven (7) working days prior to excavating. There shall be no mechanical excavation within one and a half meters (1.5m) of any Hydro Ottawa underground plant unless the exact position of plant is determined by hand digging methods.
   b. The Owner shall inform Hydro Ottawa of any acute shock construction process or rubbelization to be used during construction, and apply Hydro Ottawa's work procedure UDS0022 "Protecting Electrical Distribution Plant & Support Structures from Vibrations Caused by Construction Activity" which can be found at https://hydroottawa.com/accounts-and-billing/contractors-and-developers/guide/miscellaneous.

c. The Owner shall not use steel curb and sidewalk form support pins in the vicinity of Hydro Ottawa underground plant for electrical safety.

2. The Owner shall be responsible for all costs for feasible relocations, protection or encasement of any existing Hydro Ottawa plant.
3. The Owner shall ensure that any landscaping or surface finishing does not encroach into existing or proposed Hydro Ottawa overhead or underground assets or easement. When proposing to plant trees in proximity of existing power lines, the Owner shall refer to Hydro Ottawa's free publication "Tree Planting Advice" which can be found at https://hydroottawa.com/outages/safety/safety-outside/planting-trees. The shrub or tree location and expected growth must be considered. If any Hydro Ottawa related activity requires the trimming, cutting or removal of vegetation, or removal of other landscaping or surface finishing, the activity and the re-instatement shall be at the owner's expense.
4. The Owner shall be responsible for servicing the buildings within the property. Only one service entrance per property shall be permitted.
5. The Owner shall convey, at their cost, all required easements as determined by Hydro Ottawa.
6. The Owner shall contact Hydro Ottawa to discuss electrical servicing for the property. By Hydro Ottawa commenting on this proposal, Hydro Ottawa has not committed to, or approved the electrical servicing of the proposed development.
7. The Owner shall enter an Installation and Service agreement with Hydro Ottawa.
8. The Owner shall comply with Hydro Ottawa's Conditions of Service and thus should be consulted for the servicing terms. The document, including referenced standards, guidelines and drawings, may be found at http://www.hydroottawa.com/residential/rates-and-conditions/conditions-of-service/. The Owner should consult Hydro Ottawa prior to commencing engineering designs to ensure compliance with these documents.
9. Hydro Ottawa reserves the right to raise conditions throughout the development of this proposal should the revisions contain non-conformances with, for example, Hydro Ottawa's Conditions of Service or Standards. To ensure the best outcome, Hydro Ottawa welcomes an early discussion on the proposal.
10. For details on electrical servicing, please contact Design&Construction@hydroottawa.com.

Please provide a resubmission that addresses each of the comments or issues. Ten copies of all plans and studies are required. A cover letter must be included that states how each of the comments are addressed on the resubmission. All addenda or revisions to any studies, or drawings, shall be accompanied by a *.pdf copy (either by CD or USB). Engineering questions can be answered by Santhosh Kuruvilla at Santhosh.Kuruvilla@ottawa.ca or at 613-580-2424 ext. 27599. Please contact Laurel McCreight at Laurel.McCreight@ottawa.ca or at 613-580-2424 ext. 16587 if you have any other questions.



Ben Crooks
Planning Assistant
Development Review West

APPLICATION FOR A FIRE ROUTE DESIGNATION

Property Location

_____

Municipal or Lot No. *Street* *City*

_____*Occupancy*

Classification or Use of Building(s)

_____

Identifying Name of Building(s)/Condominium/Shopping Centre

Reason for Application

☐ Fire Chief's Orders ☐ Property Owner/Agent's request

Identification

Details	Applicant/Agent	Property Owner
Name		
Street		
Apt. No.		
City		
Postal Code		
Phone (Business)		
Fax		

All of the statements and representations contained in the attached documents filed in support of this application shall be deemed part of this application for all purposes. Fire route plan details must comply with the specific requirements of the Ontario Building Code and the Fire Route Plan Requirements document provided by the City of Ottawa.

Declaration

I, the undersigned _____ am the, ☐ property owner, ☐ authorized agent of the property named in the above application, and I certify the truth of all statements or representations contained herein. I, understand that the designation of the proposed fire route shall not be deemed a waiver of any of the provisions of any City of Ottawa by-law or Provincial legislation, notwithstanding including in or omitted from the plans or other material filed in support of or in connection with the above application.

_____

Signature of Owner or Authorized Agent

Sworn before me in the _____ of_____ in the Province of Ontario, this _____day of _____20_____.

_____

Notary Public/Commissioner for Oaths

Office Use

Date Application Received:_____

dd/mm/yy

Plan circulated for internal comment: _____ Requested Return Date:_____

dd/mm/yy dd/mm/yy

By-law sent for approval: _____Council approved date: _____

dd/mm/yy dd/mm/yy

By-law No.: _____Applicant informed of fire route approval_____

dd/mm/yy

March 28, 2018
File: 160401329

Attention: **Ben Crooks/Santhosh Kuruvilla**
City of Ottawa
110 Laurier Ave. W., 4th floor
Ottawa, Ontario
KIP IJI

Dear Santhosh,

Reference: **D07-12-17-0135 1st Submission Engineering Review Comments, Site Plan Control-851 Richmond Road**

The following summarizes Stantec's response to comments as received from the City of Ottawa for the 1st Submission Engineering Review Comments, dated December 14, 2017:

Engineering

General

1. All exterior light fixtures must be included and approved as part of the site plan approval. Therefore, the lights must be clearly identified by make, model and part number. All external light fixtures must meet the criteria for full cut-off classification as recognized by the Illuminating Engineering Society of North America (IESNA or IES), and must result in minimal light spillage onto adjacent properties (as a guideline, 0.5 fc is normally the maximum allowable spillage). In order to satisfy these criteria, the applicant must provide certification from an acceptable professional engineer. The location of all exterior fixtures, a table showing the fixture types (including make, model, part number), and the mounting heights must be included on one of the plans.

   Response: Site lighting plan has been revised accordingly

2. Is there any easement on this property? If so, please clearly show and label all the easement(s) on all plans. Please provide a copy of the easement document.

   Response: There are no easements on the property.

Reference: 1st Submission Response – 851 Richmond Road

3. Please note that additional review fees will be applicable for the 4th and subsequent reviews.

   Response: Noted

4. The City file number for this application is D07-12-17-0135. Please place this number on all drawings (bottom right side –vertically outside the border).

   Response: City file number included on all drawings.

5. The City plan number of this application is 17519. Please place this number on all drawings, horizontally at the bottom right side (Plan No. 17519).

   Response: City Plan number included on all drawings.

6. Please complete the attached Fire Route Form and send to Jennifer.Therkelsen@ottawa.ca after the fire route has been confirmed by Allan.Evans@ottawa.ca in order to add the fire route to the By-law. Please cc myself and the file lead as confirm that the form has been submitted.

   Response: The form has been submitted to the City on February 20, 2018

7. Clearly show the property line on all drawings, on all sides of the property and add the line style in the legend.

   Response: Property line included on plan and labeled in legend.

8. Please provide a full size drainage area plan for the existing condition for the entire site. On this plan, show the drainage area and runoff coefficient for each sub-catchment area. Also, add the overland flow route arrows on this plan. Provide a detailed composite runoff coefficient (c) calculation for each of the sub-catchment area and include it in the Appendix of the Site Servicing and Stormwater Management Brief. Clearly show and label the stormwater conveyance system outside the property line of this site.

   Response: full side drainage area plan of existing conditions provided with this submission, including flow routes. C values have been calculated and confirmed by Stantec based on ratio of hard surface vs soft surface for each area.

9. Based on the available information, the downstream public stormwater conveyance system was designed and constructed prior to the year 1970 and assumed to be designed to convey the 2-year flow. Therefore, the runoff from the

expansion/redevelopment area must be controlled to the 2-year pre-development condition with C=0.5.

Response: Calculations have been revised to control to 2yr predevelopment level with Capped C =0.5. Note that the current site C value is 0.85 for area tributary to the existing rear outlet. As a result of the Capped C-value of 0.5 there will be approximately 40% less flow to the existing outlet under post development conditions.

10. As per discussion with the City Legal services, the owner/applicant has no rights to outlets the stormwater runoff to a private property on the north side, without any easement or legal agreement with the adjacent property owner. In order to outlet and to convey flow through a private land, please obtain an easement and enters into a joint use and maintenance agreement with the adjacent property owner(s).

    Response: Following 1st submission, additional plans and reports have been provided by J.L. Richards for the 40 Cleary Avenue Preschool Site which was approved by the City in 2008/2009. The reports indicate that 100yr outflow drainage for the 851 Richmond Road site was accounted for in the 2008 analysis and was reviewed and approved by the City. Excerpts from information made available from J.L.Richards have been included in Appendix D. J.L. Richards was however, not able to locate the storm drainage plan or the supporting SWM calculations so the exact release rate provided for 851 Richmond Road is not known. A request for additional information has been made to the City but the drainage area plans associated with the application have not been made available. We again request the city provide the drainage plans for this previous application at 40 Cleary Avenue so that the downstream target can be confirmed which we expect would be well above the capped C-value 2yr predevelopment rate.

.

Site Servicing and Stormwater Management Brief

1. Section 4.0; paragraph 3 talks about DSEL's report that analyzed the capacity of the sanitary sewer on Richmond Road. Please include excerpts from this report to show the existing sanitary sewer on Richmond Rd. has additional capacity to receive sanitary flow from the proposed building.

    Response: Excerpts from DSEL report included in Sanitary Appendix C

2. Section 5.2, paragraph 1; sentence 2 states that existing 375 mm diameter CSP discharges into an existing ditch in the existing Children's Centre to the north.

Reference: 1st Submission Response – 851 Richmond Road

However, what is shown on drawing no. EX-1 does not agree with the description. Please review and revise. Do you have permission to convey stormwater through the adjacent property on the north (Children's Centre)?

Response: See response #10 from general comments. Storm drainage was accounted for during development of the 40 Cleary Avenue site which was reviewed and approved by the City.

3. Section 5.2, paragraph 1; sentence 3 talks about a 15 m long conveyance ditch. Who owns and maintains this ditch? If the portion of the conveyance system is owned and maintained by a private entity and do not have an agreement with the adjacent property owner, an alternative outlet is required for the proposed development.

   Response: There is no alternative outlet for the site. The site drainage flowing to 40 Cleary Avenue was included as part of their 2008/2009 site plan application.

4. Section 5.3; the stormwater management criteria that summarized in this section does not quite match the criteria that was given to you by the previous City project manager. Review and revise.

   Response: Section revised to 2yr level of service.

5. Section 5.4; It appears that the proposed oil and grit separator is only providing the quality treatment for the runoff from the proposed development area. Please explain the reason for not providing the quality treatment for the runoff from the existing area in the south? Please consult with the Conservation Authority to confirm whether this approach is acceptable to them.

   Response: OGS unit resized to provide quality control for the existing parking area as well as the proposed apartment development area.

6. Provide detailed calculations to show how the composite runoff coefficient (C) of the existing site is determined.

   Response: C values have been calculated based on ratio of hard vs soft surface and have been confirmed by Stantec.

7. Section 5.4.4.2; sentence 1 states that it is proposed to detain stormwater within a 20 m3 cistern below grade with a maximum controlled release rate of 29.7 L/s to the gravity service provided. It is not clear how you are controlling this release rate. Please elaborate.

Reference: 1st Submission Response – 851 Richmond Road

Response: The internal cistern will be designed by the mechanical consultant with a pump designed to discharge to a controlled release rate as specified in the Stantec report.

8. Section 5.4.4 talks about rooftop storage and subsurface (cistern) storage. However, there is no discussion about surface storage provided on the north and west side of the proposed building as shown on the Grading Plan. Please review and revise.

   Response: Storm drainage for these areas will be directed via catchbasin/floor drains to the internal cistern without the use of parking lot storage.

9. Please provide stormwater management for the entire site, not just the expansion area (.31 ha).

   Response: Stormwater management has been provided for the entire drainage area to the 40 Cleary Avenue outlet. Note that due to the City requirement for a capped C-value the post development discharge for the site will be approximately 40% less under post development vs pre-development conditions.

Site Servicing Plan

1. There are 2 proposed catch basins (CB 201 & CB 202) shown west of the proposed building. However, there are no catch basin leads shown on the plan to convey the stormwater captured by the CBs. Review and revise.

   Response: The proposed CB's are directly above the 1st level of underground parking and will outlet internally to the proposed cistern. Discharge from the proposed catchbasin/floor drains will be coordinated with the mechanical consultant.

2. Please show the storm sewers that conveys stormwater from the underground cistern to the outlet.

   Response: Outlet now shown from external OGS unit.

Storm Drainage Plan

Reference: 1st Submission Response – 851 Richmond Road

1. Is there a reason for redirecting the minor flow from the south of the property to the internal plumbing of the proposed building?
   Response: Minor flows from the existing parking now directed to external storm sewer. All other flows directed to internal cistern to allow for controlling of flows to meet required release rate.

2. A drainage area shown at the north-west corner of the property does not have an identification no., drainage area nor runoff coefficient. Please provide.

   Response: Revised.

3. Drainage area of the ramp shown as 0.00. Please review and revise.

   Response: Revised.

Grading Plan

1. Provide at least 0.3 m freeboard between the high point at the underground parking entrance and the gutter elevation at the north side of Richmond Road to prevent the gutter flow from entering the parking garage.

   Response: Entrance ramp previously located along Richmond Road now moved to rear of building.

2. It is not clear whether the large flow arrows shown on the plan and in the legend represents major overland flow route or not. Since the post-development runoff for the 1:100year storm event will be controlled to the calculated allowable release rate, no major overland flow route is required for the expansion area; only emergency overland flow route is required. Therefore, please revise the text associated with the large flow arrow shown in the legend. Major overland flow route is only required for the existing building and the surrounding area (outside the expansion area).

   Response: Revised on plan and legend.

3. There are two pavement designs (car parking areas and local roads) shown on this plan. Clearly delineate these 2 areas with different hatchings.
   4. Response: Areas delineated on proposed grading plan and shown on Legend.

Reference: 1st Submission Response – 851 Richmond Road

Regards,

STANTEC CONSULTING LTD.

Sheridan Gillis
Project Manager Urban Land Engineering
Phone: 613-725-5551
Sheridan.Gillis@stantec.com

Neal Cody, P.Eng.
Water Resources Engineer
Phone: 780-969-3263
Neal.Cody@stantec.com

w:\active\160401329_851 richmond road\design\correspondence\city of ottawa\1st submission response letter\2018-03-28_ eng 1st submission comments response.docx

From:	Lucie Dalrymple
To:	Gillis, Sheridan
Cc:	Moroz, Peter; Marsh Frère; Guy Forget
Subject:	RE: River Parkway Preschool - 40 Cleary Avenue
Date:	Wednesday, March 28, 2018 9:07:32 AM
Attachments:	image001.png JLR_sig_logo_715c24bf-568b-46ae-8040-22d550fc23e3.png plan01.tif 19616-05 SWM Plan RiverParkwayPreschoolCentre ClearyAve rev jan 07 (2).pdf Sheet_0003.PDF Sheet_0004.PDF Sheet_0001.PDF Sheet_0002.PDF

Hi Sheridan,

Please find attached the following PDF copies of the documents we had on file:

- JLR 19616 - SWM Report, dated January 2007
- JLR 19616 - Dwg S1, Rev.9: 25/08/09
- JLR 19616 – Dwg G1, Rev.8: 25/08/09
- JLR 19616 – Dwg 01, Rev.9: 25/08/09
- JLR 19616 – Dwg 02, Rev.9: 25/08/09

Note that we did not find a complete copy of the report and that the drawings attached do not seem to form a complete set of drawings. Please also note that the building footprint displayed on the drawings may not be in this exact location in the field due to on-site constraints encountered during construction.

As requested, we have attached the electronic files for the aforementioned project.

J.L. Richards & Associates Limited (JLR) is providing the files in the spirit of project cooperation but only under the following conditions. Your use of these files will acknowledge your unqualified acceptance of the following conditions of use:

1. *The report and drawing files contain proprietary information and are the copyright property of J.L. Richards & Associates Limited.*

2. *You agree to protect this data from unauthorized use by third parties.*

3. *This is a one-time authorization and does not convey any agreement for any subsequent use.*

4. *The report and drawing files were prepared for the purpose of design and administration of the JLR project and specifically were not prepared in anticipation of your stated use.*

5. *All title blocks, professional seals or other references to the designers are to be fully removed prior to use, alteration or reprinting.*

6. *It is acknowledged that modified and/or omitted information can result where fully compatible hardware/software are not used and/or where the files are not properly understood or manipulated. Changes to files may also occur with translation to other software packages and/or more or less current versions of the same software.*

7. *The report and drawings are provided "as is" and at your request and for your convenience. You, at your sole discretion and expense, are responsible for verifying their accuracy and suitability for your purposes. J.L. Richards & Associates Limited cannot and does not accept responsibility for their subsequent use. Neither you, your subtrades, nor any third party, have any right of reliance on these files.*

Regards,

Lucie

Lucie Dalrymple, P.Eng.
Associate
Senior Civil Engineer

J.L. Richards & Associates Limited
864 Lady Ellen Place, Ottawa, ON K1Z 5M2
Tel: 613-728-3571 Fax: 613-728-6012

From: Gillis, Sheridan [mailto:Sheridan.Gillis@stantec.com]
Sent: March 26, 2018 3:53 PM
To: Lucie Dalrymple
Cc: Moroz, Peter
Subject: River Parkway Preschool - 40 Cleary Avenue

Hi Lucy,
I'm not sure if you're the best person to be asking but I'm looking for a SWM report (or servicing/swm) for a pre-school at 40 Cleary Avenue which J.L. Richards prepared in 2007 (sorry you're our primary go-to for all things J.L.Richards). I've included the Site Servicing Plan for the site for reference. We're in the process of preparing a report for the Lord Richmond Apartments which drains to the southwest corner of the preschool and want to make sure we're matching any targets that had previously been set.
If you have any questions feel free to call,
Thank you,

Sheridan Gillis

Project Manager, Urban Land Engineering
Stantec
400 - 1331 Clyde Avenue Ottawa ON K2C 3G4
Phone: (613) 725-5551

Mobile: (613) 799-1363
sheridan.gillis@stantec.com

Design with community in mind

File Number: D07-12-17-0135

May 1, 2018

FOTENN
223 McLeod Street
Ottawa, ON K2P 0Z8
Attn: Stephanie Morris

Sent via email to [morris@fotenn.com]

Dear Ms. Morris,

Re: Site Plan Control Comments – 851 Richmond Road

The following review comments are provided in response to the second submission of the Site Plan Control application (D07-12-17-0135) for 851 Richmond Road. Please coordinate the changes made in response to the comments below across all plans as applicable.

City of Ottawa

Urban Design

Outstanding UDRP recommendations – Further exploration and response requested:

1. The Panel is of the opinion that the proposed building could transition better between the five storey building on one side, and the slab apartment building on the other, by better articulating its façades, and by shifting massing and height. A deliberate articulation of the side and rear facades, as well as staggering the height from the east to west side, would reduce the 'wall' effect along Richmond Road, created by the proposed building.

2. The Panel is of the opinion that a base, middle and top expression would result in a better overall design of this building. Consider manipulating the mass with diverse treatments on the two top floors.

3. Ground floor height seems squat. The Panel recommends increasing the height of the ground floor, perhaps to two stories, in order to improve the impact of the building on its associated streetscape.

4. The Panel advises that more glazing be added to the east elevation in order to improve the exterior design of the building, and take advantage of views toward the Ottawa River and the downtown core of the city.

Additional staff concerns based on revised proposal:

5. Main building entrance should be closer to grade, and ramp/or lift should be internalized if necessary.

6. Amenity units facing Richmond Road should be as close to the grade of the public right of way to allow for potential future commercial use and higher ceiling heights.

7. Consider the treatment of the second floor balconies and their impact on the space below. What treatment would be proposed for the underside of these balconies?

8. Landscaping/street trees should be provided across the frontage of the new building to create a consistent streetscape treatment across the entire site.

Engineering

General

9. All external light fixtures must meet the criteria for full cut-off classification as recognized by the Illuminating Engineering Society of North America (IESNA or IES), and must result in minimal light spillage onto adjacent properties (as a guideline, 0.5 fc is normally the maximum allowable spillage). In order to satisfy these criteria, the applicant must provide certification from an acceptable professional engineer. **Still outstanding.**

10. Please complete the attached **Fire Route Form** and send to Jennifer.Therkelsen@ottawa.ca after the fire route has been confirmed by Allan.Evans@ottawa.ca in order to add the fire route to the By-law. Please cc myself and the file lead as confirm that the form has been submitted. **Please forward this email to us.**

11. Storm Drainage Plan for 30/40 Cleary is available at the City. Please make a copy and include it in the Site Servicing and Stormwater Management Brief.

12. Has 40 Cleary Ave. site plan received MOECC ECA for servicing more than one parcel? 40 Cleary required an MOECC ECA for servicing 2 parcels in order for this site to convey stormwater on to their site. Please provide a copy of this ECA.

Site Servicing and Stormwater Management Brief

13. Section 4.0; paragraph 3 talks about DSEL's report that analyzed the capacity of the sanitary sewer on Richmond Road. Please include excerpts from this report to show the existing sanitary sewer on Richmond Rd. has additional capacity to receive sanitary flow from the proposed building. **Still outstanding. The title page of the report or the sewer design sheet is not found in Appendix C.**

14. Page 3.1, last paragraph; as per Technical Bulletin ISD-2010-2, the normal operating pressure range is between 350 Kpa and 480 Kpa, not between 345 and 552 Kpa. Please review and revise.

15. Page 4.1; second last paragraph states that detailed sanitary sewage calculations are included in Appendix C. However, detailed wastewater peak flow calculations is not found in Appendix C. Please include.

16. Page 5.1, section 5.2; last sentence of the first paragraph states that an existing conveyance system conveys flow from this site to the Ottawa River. However, based on the GeoOttawa, it appears that there is no conveyance system exists between the end of the 525mm private storm

sewer and the public sewer on Cleary Ave. Please demonstrate by providing a drawing to show that there is a conveyance system exists between the private sewer and the public sewer.

17. Page 5.1, section 5.2.1; second sentence states that on-site sewer for 40 cleary Ave. discharges to the municipal sewer on Cleary Ave. and ultimately to the Ottawa River. However, based on the City of Ottawa sewer network map, there is no connection between the private sewer (525 mm) and the public sewer on Cleary Ave. Please review and clarify.

18. Section 5.4; please revise sentence 4 to clarify that the proposed OGS unit will provide quality control for the existing parking area as well as the proposed apartment development area.

19. Page 5.4, sections 5.4.4.1; revise the word “retain” to “detain” in the first sentence.

20. Page 5.4, first paragraph of section 5.4.4.1; if the proposed plan is to detain stormwater on the roof top of the existing building, please consult and confirm this with the architect/engineer that it is possible and revise this paragraph accordingly.

21. Page 5.4, notes above Table 4 and Table 6; revise the word “retention” to “detention”.

22. Page 5.5 through 5.6; please add an additional column to all tables (Tables 8, 9, 10, 11, 12, and 13) and show the available storage for all of the drainage areas.

23. Table 13 shows the 100-year Q-release for the area ID UNC-1 is 1.1 L/s. However, Appendix D shows a different release rate (1.24 L/s). Review and revise.

24. Is there surface ponding in drainage area L201A? Is there an ICD proposed within the CB 201?

25. Please provide flow curves for the ICDs located at the CBs 204 and 203 and clearly show the head and the associated flows for the 2-year and the 100-year storm events.

26. Page 5.7; section 5.5 indicates that oil and grit separator unit is located within the underground parking structure. It is not clear how the total allowable release rate from the site is conveyed through the oil & grit separator to remove the 80% TSS while the flow from drainage areas L204A and L203A is directly conveyed to the outlet pipe. Please clarify.

27. Page 5.7, section 5.5; please specify the treatment capacity (L/s), sediment storage capacity (m3), and oil storage capacity of the proposed oil & grit separator.

<u>Site Servicing Plan</u>

28. There are 2 proposed catch basins (CB 201 & CB 202) shown west/north of the proposed building. However, there are no catch basin leads shown on the plan to convey the stormwater captured by these CBs (previous comment). If these inlets are floor drains and located on the parking garage floor, please remove them from this plan.

29. Please clarify the location of the Oil&Grit separator. Please make it clear on this plan.

30. Please show flow arrows on all the storm sewers. It is not clear how the stormwater flow is conveyed to the cistern and the flow is conveyed to the outlet culvert from the cistern. Clearly show the conveyance system with flow arrows.

31. Please do not specify the service connection to the water main as TVS type. Service connection to the watermain be identified as “to be determined in the field by the City”.

32. Cleary show the outlets for the foundation drain and the roof drains.

Storm Drainage Plan

33. Please show the locations of all the roof drains on the existing and proposed buildings. Also, show the sub-catchment area for each of the roof drain, 5-year and 100-year ponding area.

34. Provide a roof drain table for each building with the information shown on the attached Table (see attached).

Grading Plan

35. Large solid flow arrow that shown under the legend represents the direction of major system flow 2 YR -100 YR. Based on the on-site ponding and other storage provided on site, the runoff from the major storm events (up to 100-year storm) is detained on the site. If this is the case, please remove this flow arrow from the drawing.

36. Do you have permission from the adjacent property owner to convey emergency overland flow through 40 Cleary Ave? Please provide a consent letter.

37. If any of the proposed retaining wall is greater than 1.0 m high, please submit design details and drawings signed and sealed by a structural engineer.

38. Clearly show the emergency (overland flow greater than 100-year) overland flow route for the entire site.

39. A portion of the emergency overland flow is directed to the underground parking via the ramp. This design is not acceptable. The emergency overland flow should be re-directed external to the building.

40. Is the heavy duty asphalt symbol shown under the legend existing or proposed? Please clarify.

41. Are you removing and replacing the existing asphalt pavement on the existing parking lot on the west/south side of the existing building?

42. Provide additional spot elevations and/or flow arrows on the west/south drive isle to clarify what portion of the drainage area L203A sheet drains to CB203. Is it consistent with the Storm Drainage Plan?

43. Surface ponding on site is not allowed for the 2-year storm event. Is there ponding at CB204 during a 2-year storm event?

Erosion Control Plan and Detail Sheet

44. Please provide silt fence on all sides of the site (except at the access points). Based on the existing grades, there is sheet drain onto Richmond Rd.

Transportation

45. To be provided.

Forestry

46. L1 – Landscape Plan – please replace Katsara species; ensure all species are appropriate for Ottawa's climate; ensure trees along Richmond are salt tolerant

47. Given the proposed development, the tree removals are justified; a tree removal permit is required and I will issue one when appropriate.

Building Code Services

48. Fire department connection and fire route have still not been clarified.

- Fire Department Connection – not shown (both buildings).
- Fire Access route- not indicated. Or clarified.

Waste Collection Services

49. How wide is the door leading to the garbage room ? It has to be at least 2.2 meters.

Please provide a resubmission that addresses each of the comments or issues. Three copies of each plan and three copies of each studies are required. A cover letter must be included that states how each of the comments are addressed on the resubmission. All addenda or revisions to any studies, or drawings, shall be accompanied by a *.pdf copy (either by CD or USB). Engineering questions can be answered by Mark Fraser at Mark.Fraser@ottawa.ca or at 613-580-2424 ext. 27791. Please contact me at Laurel.McCreight@ottawa.ca or at 613-580-2424 ext 16587 if you have any other questions.



Laurel McCreight Planner II
Development Review West

ROOF DRAIN TABLE: AREA A-2 (ROOF DRAINS 1 to 10)						
AREA ID *	ROOF DRAIN No. (WATTS MODEL)	ROOF DRAIN OPENING SETTING	5-YEAR RELEASE RATE	APPROX. 5-YR PONDING DEPTH	100-YEAR RELEASE RATE	APPROX. 100-YR PONDING DEPTH
A-2	RD 1 (RD-100-A-ADJ)	1/4 EXPOSED	0.79 L/s	11 cm	0.95 L/s	14 cm
A-2	RD 2 (RD-100-A-ADJ)	1/4 EXPOSED	0.79 L/s	10 cm	0.87 L/s	13 cm
A-2	RD 3 (RD-100-A-ADJ)	1/4 EXPOSED	0.79 L/s	10 cm	0.87 L/s	13 cm
A-2	RD 4 (RD-100-A-ADJ)	1/4 EXPOSED	0.79 L/s	10 cm	0.87 L/s	13 cm
A-2	RD 5 (RD-100-A-ADJ)	1/4 EXPOSED	0.79 L/s	10 cm	0.87 L/s	13 cm
A-2	RD 6 (RD-100-A-ADJ)	1/4 EXPOSED	0.79 L/s	10 cm	0.95 L/s	14 cm
A-2	RD 7 (RD-100-A-ADJ)	FULLY EXPOSED	1.34 L/s	11 cm	1.89 L/s	15 cm
A-2	RD 8 (RD-100-A-ADJ)	FULLY EXPOSED	1.34 L/s	11 cm	1.89 L/s	15 cm
A-2	RD 9 (RD-100-A-ADJ)	1/4 EXPOSED	0.79 L/s	11 cm	0.95 L/s	14 cm
A-2	RD 10 (RD-100-A-ADJ)	1/4 EXPOSED	0.79 L/s	11 cm	0.95 L/s	14 cm

June 29, 2018
File: 160401329

Attention: Laurel McCreight/Santhosh Kuruvilla
City of Ottawa
110 Laurier Ave. W., 4th floor
Ottawa, Ontario K1P 1J1

Dear Santhosh,

Reference: D07-12-17-0135 2nd Submission Engineering Review Comments, Site Plan Control-851 Richmond Road

The following summarizes Stantec's response to comments as received from the City of Ottawa for the 2nd Submission Engineering Review Comments, dated May 1, 2018.

Engineering

General

1. All external light fixtures must meet the criteria for full cut-off classification as recognized by the Illuminating Engineering Society of North America (IESNA or IES), and must result in minimal light spillage onto adjacent properties (as a guideline, 0.5 fc is normally the maximum allowable spillage). In order to satisfy these criteria, the applicant must provide certification from an acceptable professional engineer. Still outstanding.
   R. Please see sight lighting photometrics plan prepared by electrical consultant for confirmation.

2. Please complete the attached Fire Route Form and send to Jennifer.Therkelsen@ottawa.ca after the fire route has been confirmed by Allan.Evans@ottawa.ca in order to add the fire route to the By-law. Please cc myself and the file lead as confirm that the form has been submitted. Please forward this email to us.
   R. Correspondence included in Appendix A

3. Storm Drainage Plan for 30/40 Cleary is available at the City. Please make a copy and include it in the Site Servicing and Stormwater Management Brief.
   R. Stormwater Management Report provided by the City and included in Appendix D. Reference plans from 40 Cleary Avenue SWM report also included in Appendix D.

4. Has 40 Cleary Ave. site plan received MOECC ECA for servicing more than one parcel? 40 Cleary required an MOECC ECA for servicing 2 parcels in order for this site to convey stormwater on to their site. Please provide a copy of this ECA.
   R. Correspondence regarding ECA for 40 Cleary Avenue has been included in Appendix H. The 851 Richmond Road site does not accept drainage from an adjacent property, is a

Reference: 2nd Submission Response – 851 Richmond Road

private site, and non-industrial use therefore is exempt from requiring an ECA under Ontario Regulation 525/98.

Site Servicing and Stormwater Management Brief

5. Section 4.0; paragraph 3 talks about DSEL's report that analyzed the capacity of the sanitary sewer on Richmond Road. Please include excerpts from this report to show the existing sanitary sewer on Richmond Rd. has additional capacity to receive sanitary flow from the proposed building. Still outstanding. The title page of the report or the sewer design sheet is not found in Appendix C.
   R. Title Page of Report and sewer design sheet now included in Appendix C

6. Page 3.1, last paragraph; as per Technical Bulletin ISD-2010-2, the normal operating pressure range is between 350 kPa and 480 kPa, not between 345 and 552 kPa. Please review and revise.
   R. Report revised accordingly.

7. Page 4.1; second last paragraph states that detailed sanitary sewage calculations are included in Appendix C. However, detailed wastewater peak flow calculations is not found in Appendix C. Please include.
   R. Sanitary sewer analysis is now included in Appendix C

8. Page 5.1, section 5.2; last sentence of the first paragraph states that an existing conveyance system conveys flow from this site to the Ottawa River. However, based on the GeoOttawa, it appears that there is no conveyance system exists between the end of the 525mm private storm sewer and the public sewer on Cleary Ave. Please demonstrate by providing a drawing to show that there is a conveyance system exists between the private sewer and the public sewer.
   R. Review of the 40 Cleary Avenue SWM report (see Appendix D) and further site investigation on May 25, 2018 indicates that the 851 Richmond Road Site (identified as Lord Richmond Apartments in 40 Cleary Avenue Report) discharges to a 525mm storm sewer on the 40 Cleary Avenue property and is then conveyed through a series of swales and ditches eventually outletting to the Ottawa River. The site servicing plan and stormwater management plan for 40 Cleary Avenue have been included in Appendix D for reference.

9. Page 5.1, section 5.2.1; second sentence states that on-site sewer for 40 Cleary Ave. discharges to the municipal sewer on Cleary Ave. and ultimately to the Ottawa River. However, based on the City of Ottawa sewer network map, there is no connection between the private sewer (525 mm) and the public sewer on Cleary Ave. Please review and clarify.
   R. Report revised - see comment #8.

10. Section 5.4; please revise sentence 4 to clarify that the proposed OGS unit will provide quality control for the existing parking area as well as the proposed apartment development area.
    R. Report revised in section 5.5 to acknowledge this.

Reference: 2nd Submission Response – 851 Richmond Road

11. Page 5.4, sections 5.4.4.1; revise the word "retain" to "detain" in the first sentence.
    R. Report revised.

12. Page 5.4, first paragraph of section 5.4.4.1; if the proposed plan is to detain stormwater on the roof top of the existing building, please consult and confirm this with the architect/engineer that it is possible and revise this paragraph accordingly.
    R. Due to the higher allowable release rate that was determined from the background documentation, it is no longer proposed to detain stormwater on the roof of the existing building.

13. Page 5.4, notes above Table 4 and Table 6; revise the word "retention" to "detention".
    R. Revised.

14. Page 5.5 through 5.6; please add an additional column to all tables (Tables 8, 9, 10, 11, 12, and 13) and show the available storage for all of the drainage areas.
    R. Stormwater is now only being proposed to be detained on the proposed building's roof, therefore the other tables have been removed. Table 4 & 5 have been revised to add the additional column indicating available storage.

15. Table 13 shows the 100-year Q-release for the area ID UNC-1 is 1.1 L/s. However, Appendix D shows a different release rate (1.24 L/s). Review and revise.
    R. The areas have been removed from the Appendix D tributary calculations sheets and drawing. The Richmond Road flows are now quantified in Table 6 and 7 of the report.

16. Is there surface ponding in drainage area L201A? Is there an ICD proposed within the CB 201?
    R. There is no longer any surface ponding proposed, however the ponding extents are still shown on the drawing as defined by the grading spill points. No ICDs have been proposed on site as they are not required to meet the quantity control target. The minor system has been sized for the 2-year event, once the pipes have reached maximum flow capacity they will act as ICD's and surface ponding and major system flow will be as indicated on drawing GP-1.

17. Please provide flow curves for the ICDs located at the CBs 204 and 203 and clearly show the head and the associated flows for the 2-year and the 100-year storm events.
    R. Not applicable - ICDs are no longer proposed.

18. Page 5.7; section 5.5 indicates that oil and grit separator unit is located within the underground parking structure. It is not clear how the total allowable release rate from the site is conveyed through the oil & grit separator to remove the 80% TSS while the flow from drainage areas L204A and L203A is directly conveyed to the outlet pipe. Please clarify.

Reference: 2nd Submission Response – 851 Richmond Road

R. The OGS is located outside of the building structure – the report has been revised to reflect this. Existing parking areas discharge directly to the OGS unit (a notch in the P1 Parking garage structure is required to accommodate the location of the OGS unit). Flows directed internally from the proposed expansion area will also be directed to the OGS units providing for quality control treatment of the entire 851 Richmond Road site.

19. Page 5.7, section 5.5; please specify the treatment capacity (L/s), sediment storage capacity (m3), and oil storage capacity of the proposed oil & grit separator.
R. This has been added as Table 10.

Site Servicing Plan

20. There are 2 proposed catch basins (CB 201 & CB 202) shown west/north of the proposed building. However, there are no catch basin leads shown on the plan to convey the stormwater captured by these CBs (previous comment). If these inlets are floor drains and located on the parking garage floor, please remove them from this plan.
R. These previously-noted CBs have been now identified as Area Drains. The Area Drains are placed above the P1 Parking Deck and are directed internally before being pumped to the OGS unit.

21. Please clarify the location of the Oil&Grit separator. Please make it clear on this plan.
R. Location now clarified on plans – see very north corner of site.

22. Please show flow arrows on all the storm sewers. It is not clear how the stormwater flow is conveyed to the cistern and the flow is conveyed to the outlet culvert from the cistern. Clearly show the conveyance system with flow arrows.
R. Additional Flows areas included on plans.

23. Please do not specify the service connection to the water main as TVS type. Service connection to the watermain be identified as "to be determined in the field by the City".
R. Plans revised.

24. Cleary show the outlets for the foundation drain and the roof drains.
R. Outlet shown at northeast corner of the building.

Storm Drainage Plan

25. Please show the locations of all the roof drains on the existing and proposed buildings. Also, show the sub-catchment area for each of the roof drain, 5-year and 100-year ponding area.
R. Roof Drainage plans and elevations were not yet available from the mechanical consultant.

26. Provide a roof drain table for each building with the information shown on the attached Table (see attached).

Reference: 2nd Submission Response – 851 Richmond Road

R. Roof Drainage plans and elevations were not yet available from the mechanical consultant.

Grading Plan

27. Large solid flow arrow that shown under the legend represents the direction of major system flow 2 YR -100 YR. Based on the on-site ponding and other storage provided on site, the runoff from the major storm events (up to 100-year storm) is detained on the site. If this is the case, please remove this flow arrow from the drawing.
    R. Plans revised.

28. Do you have permission from the adjacent property owner to convey emergency overland flow through 40 Cleary Ave? Please provide a consent letter.
    R. Although flows up to the 100yr event are conveyed to 40 Cleary Avenue, grading has been revised to ensure that emergency overland flow is now directed to Richmond Road via the proposed entrance at the east side of the proposed building.

29. If any of the proposed retaining wall is greater than 1.0 m high, please submit design details and drawings signed and sealed by a structural engineer.
    R. Plans to be provided.

30. Clearly show the emergency (overland flow greater than 100-year) overland flow route for the entire site.
    R. Flow arrows now included on plans.

31. A portion of the emergency overland flow is directed to the underground parking via the ramp. This design is not acceptable. The emergency overland flow should be re-directed external to the building.
    R. Overland flow revised.

32. Is the heavy-duty asphalt symbol shown under the legend existing or proposed? Please clarify.
    R. Plans revised to indicate proposed.

33. Are you removing and replacing the existing asphalt pavement on the existing parking lot on the west/south side of the existing building?
    R. Yes, a new storm sewer and new asphalt will be installed within the existing parking lot.

34. Provide additional spot elevations and/or flow arrows on the west/south drive isle to clarify what portion of the drainage area L203A sheet drains to CB203. Is it consistent with the Storm Drainage Plan?
    R. Additional existing elevations included with submission plans. Yes, the grading plan is consistent with the storm drainage plan.

Reference: 2nd Submission Response – 851 Richmond Road

35. Surface ponding on site is not allowed for the 2-year storm event. Is there ponding at CB204 during a 2-year storm event?
    R. No, no longer applicable.

Erosion Control Plan and Detail Sheet

36. Please provide silt fence on all sides of the site (except at the access points). Based on the existing grades, there is sheet drain onto Richmond Rd.
    R. The surface from the existing site onto Richmond Road is hardscaped with asphalt – therefore silt fence cannot be installed. Once excavation of the parking structure begins the site elevations will be lower than the Richmond Road tie-in elevations and sheet flow will not be possible.

Regards,

STANTEC CONSULTING LTD.

Sheridan Gillis
Project Manager Urban Land Engineering
Phone: 613-725-5551
Sheridan.Gillis@stantec.com

Neal Cody, P.Eng.
Water Resources Engineer
Phone: 780-969-3263
Neal.Cody@stantec.com

August 28, 2018
File: 160401329

Attention: **Laurel McCreight/Santhosh Kuruvilla**
City of Ottawa
110 Laurier Ave. W., 4th floor
Ottawa, Ontario K1P 1J1

Dear Santhosh,

Reference: **D07-12-17-0135 851 Richmond Road Site Plan Control – 3rd Engineering Review**

The following summarizes Stantec's response to comments as received from the City of Ottawa for the 3rd Submission Engineering Review Comments, dated July 23, 2018.

Engineering

General

1. All external light fixtures must meet the criteria for full cut-off classification as recognized by the Illuminating Engineering Society of North America (IESNA or IES), and must result in minimal light spillage onto adjacent properties (as a guideline, 0.5 fc is normally the maximum allowable spillage). In order to satisfy these criteria, the applicant must provide certification from an acceptable professional engineer. Still outstanding.

   R/ To be addressed by Site Electrical Consultant

Site Servicing and Stormwater Management Brief

1. Page 4.1, section 4.0; is the peak factor (4.0) shown in Table 2 correct? Please check the calculation based on the new Harmon equation provided in Technical Bulletin ISTB-2018-01. If it is incorrect, review and revise all the numbers associated the correct peak factor.

   R/ Peak factor is calculated correctly including new correction factor from ISTB-2018-01

2. Section 5.2; please revise paragraph one based on the response provided to comment #8 (second submission response dated June 29, 2018).

   R/Section 5.2 revised to further clarify existing outlet.

3. What use is being proposed on the first floor of the new building? If it is something other than a residential use, please include the wastewater flow generated from the first floor based on the Appendix 4-A of the latest Ottawa Sewer Design Guideline.

Reference: 3rd Submission Response – 851 Richmond Road

R/ Flows based on proposed unit numbers from available floor plans. There is no ground floor commercial proposed for the site.

4. Section 5.2, bullet no. 4; what does it mean by provide a storm outlet for the existing development to the south? Please clarify.

   R/ "Existing Development" was in reference to existing Lord Richmond Apartment. Section has been clarified.

5. Last paragraph on page 5.2 indicates that the oil grit separator is located at the north-east corner of the building. Please clarify whether the oil and grit separator is located within the building or not.

   R/Oil Grit Separator is located outside the building. The OGS unit is clearly labeled as exterior on plans and noted as "just outside the underground parking structure" within the report.

6. Page 5.3, section 5.4.1; paragraph2 talks about an uncontrolled drainage area fronting Richmond Road, however, no information is provided on the Storm Drainage Plan or in Appendix D about this subcatchment or subarea. Please review and revise.

   R. Refer to area EXT-1 as per drawing SD-1. Appendix D has been revised accordingly.

7. Appendix D, modified rational method table provided for the 2-year storm; please correct the headings of column 2 from "I (5yr)" to "I (2yr)".

   R. Revised as noted.

8. Page 5.4; section 5.4.4.2 talks about a new catch basin (CB204), but this catch basin is not shown on any of the drawings. Please review and revise.

   R/Revised – reference was to CB 203 as opposed to CB204.

9. Pages 5.4, 5.5; section 5.4.5 talks about the uncontrolled area fronting the Richmond Road. However, the Storm Drainage Area Plan does not show any information for this subcatchment area (UNC-1). Please review and revise. Also, include the Q release calculation for this subcatchment area in the Appendix D.

   R. See comment response 6.

10. Section 5.5; paragraph one states that the ultimate outlet for this site is Rideau River. Is the ultimate outlet Rideau River or the Ottawa River?

    R/Revised

Reference: 3rd Submission Response – 851 Richmond Road

11. Appendix D; include the overall runoff coefficient calculation for the subcatchment area UNC-1.

    R. See comment response 6.

12. Appendix D, storm sewer design sheet; per my discussion with Sheridan Gillis (Stantec), please correct the values in the column heading "AxC" for the area id numbers EX-BLDG, L202A and RAMP, BLDG,L201A.

    R. Refer to column AxC (100-YEAR) and ACCUM. AxC (100YR) in the storm sewer design sheet for flows from subcatchment EX-BLDG.

13. Please demonstrate that the proposed storm sewers will act as a restrictor pipe during the 100-year storm, for its intended purpose. If it works as a restrictor pipe, please delineate the 100-year ponding area on the Grading Plan (preferred option) or on the Storm Drainage Plan and show the maximum ponding depth (m), maximum ponding elevation and the total volume stored (m3) for all the surface pondings.

    R/ Pipes have been designed to be free flowing in the 100yr condition. Additional 100yr design sheet included in appendix D for reference.

14. If the 100-year ponding area is going to be shown on the Storm Drainage Plan, please add the existing and proposed spot elevations to this plan as shown on the Grading Plan.

    R. 100 year ponding is only shown on the Grading Plan.

Storm Drainage Plan

1. Please show the locations of all the roof drains for the proposed building. Also, show the sub-catchment area for each of the roof drain, 5-year and 100-year ponding area. Still outstanding

   R/ Roof Drainage table included on plan SD-1, and locations of roof drains now shown on drawings. Drawing SD-1 details individual roof drain catchments based on most recent architectural plans. 100yr ponding below maximum 150mm allowable depth based on OBC criteria.

2. Provide a roof drain table for the proposed building with the information shown on the attached Table. Still outstanding

   R/ Updated Roof Drain table included on plan SD-1.

3. The southern boundary line of the subcatchment area L203A shown is not consistent with the Grading Plan. The southern boundary line should follow the proposed barrier curb on the south side. Please review, revise, and make all the necessary changes as required.

Reference: 3rd Submission Response – 851 Richmond Road

R. Subcatchments have been revised as noted.

4. Which inlet structure captures the runoff from the subcatchment area L201A?

   R. Area Drain 201.

Grading Plan

1. Please provide several flow arrows and associated slopes on the north and west side of the existing building.

   R. Slopes have been added along the pathway. Terracing has been shown where necessary.

2. Portion of the area between the front of the existing building and the Richmond right-of-way exceeds the maximum slope (7%). Please limit the maximum slope to 7%.

   R. Additional terracing has been shown to provide maximum slopes of 7%.

3. Is there a barrier curb proposed at the north property line? If there is , clearly show and label the T/C and B/C elevations of the barrier curb next to the Richmond Road.

   R. Barrier curb is proposed 1.3m south of the north property line. No barrier curb is proposed along Richmond Road. T/C and B/C labels have been added to all curbs.

4. If any of the proposed retaining wall is greater than 1.0 m high, please submit design details and drawings signed and sealed by a structural engineer. Still outstanding

   R/Walls greater that 1.0m in height are noted to be designed by Structural Engineering on proposed grading plan.

Regards,

STANTEC CONSULTING LTD.

Sheridan Gillis
Project Manager Urban Land Engineering
Phone: 613-725-5551
Sheridan.Gillis@stantec.com

Neal Cody, P.Eng.
Water Resources Engineer
Phone: 780-969-3263
Neal.Cody@stantec.com

Reference: 3rd Submission Response – 851 Richmond Road

Appendix H DRAWINGS

PROJECT INFORMATION	
ENGINEERED PRODUCT MANAGER:	HAIDER NASRULLAH 647-850-9417 HAIDER.NASRULLAH@ADSPIPE.COM
ADS SALES REP:	BRAD DUNLOP 613-893-7336 BRAD.DUNLOP@ADSPIPE.COM
PROJECT NO:	S469925
ONTARIO SITE COORDINATOR:	RYAN RUBENSTEIN 519-710-3687 RYAN.RUBENSTEIN@ADSPIPE.COM

Advanced Drainage Systems, Inc.

SiteAssist™
FOR STORMTECH
INSTALLATION INSTRUCTIONS
VISIT OUR WEBSITE

30 CLEARY AVENUE

OTTAWA, ON.

SC-800 STORMTECH CHAMBER SPECIFICATIONS

1. CHAMBERS SHALL BE STORMTECH SC-800.
2. CHAMBERS SHALL BE ARCH-SHAPED AND SHALL BE MANUFACTURED FROM VIRGIN, IMPACT-MODIFIED POLYPROPYLENE COPOLYMERS.
3. CHAMBERS SHALL BE CERTIFIED TO CSA B184, "POLYMERIC SUB-SURFACE STORMWATER MANAGEMENT STRUCTURES", AND MEET THE REQUIREMENTS OF ASTM F2418, "STANDARD SPECIFICATION FOR POLYPROPYLENE (PP) CORRUGATED WALL STORMWATER COLLECTION CHAMBERS".
4. CHAMBER ROWS SHALL PROVIDE CONTINUOUS, UNOBSTRUCTED INTERNAL SPACE WITH NO INTERNAL SUPPORTS THAT WOULD IMPEDE FLOW OR LIMIT ACCESS FOR INSPECTION.
5. THE STRUCTURAL DESIGN OF THE CHAMBERS, THE STRUCTURAL BACKFILL, AND THE INSTALLATION REQUIREMENTS SHALL ENSURE THAT THE LOAD FACTORS SPECIFIED IN THE AASHTO LRFD BRIDGE DESIGN SPECIFICATIONS, SECTION 12.12, ARE MET FOR: 1) LONG-DURATION DEAD LOADS AND 2) SHORT-DURATION LIVE LOADS, BASED ON THE CSA S6 CL-625 TRUCK AND THE AASHTO DESIGN TRUCK WITH CONSIDERATION FOR IMPACT AND MULTIPLE VEHICLE PRESENCES.
6. CHAMBERS SHALL BE DESIGNED AND ALLOWABLE LOAD CONFIGURATIONS DETERMINED IN ACCORDANCE WITH ASTM F2787, "STANDARD PRACTICE FOR STRUCTURAL DESIGN OF THERMOPLASTIC CORRUGATED WALL STORMWATER COLLECTION CHAMBERS". LOAD CONFIGURATIONS SHALL INCLUDE: 1) INSTANTANEOUS (<1 MIN) AASHTO DESIGN TRUCK LIVE LOAD ON MINIMUM COVER 2) MAXIMUM PERMANENT (75-YR) COVER LOAD AND 3) ALLOWABLE COVER WITH PARKED (1-WEEK) AASHTO DESIGN TRUCK.
7. REQUIREMENTS FOR HANDLING AND INSTALLATION:
   - TO MAINTAIN THE WIDTH OF CHAMBERS DURING SHIPPING AND HANDLING, CHAMBERS SHALL HAVE INTEGRAL, INTERLOCKING STACKING LUGS.
   - TO ENSURE A SECURE JOINT DURING INSTALLATION AND BACKFILL, THE HEIGHT OF THE CHAMBER JOINT SHALL NOT BE LESS THAN 50 mm (2").
   - TO ENSURE THE INTEGRITY OF THE ARCH SHAPE DURING INSTALLATION, a) THE ARCH STIFFNESS CONSTANT SHALL BE GREATER THAN OR EQUAL TO 750 LBS/FT/%. THE ASC IS DEFINED IN SECTION 6.2.8 OF ASTM F2418. AND b) TO RESIST CHAMBER DEFORMATION DURING INSTALLATION AT ELEVATED TEMPERATURES (ABOVE 23° C / 73° F), CHAMBERS SHALL BE PRODUCED FROM REFLECTIVE GOLD OR YELLOW COLORS.
8. ONLY CHAMBERS THAT ARE APPROVED BY THE SITE DESIGN ENGINEER WILL BE ALLOWED. UPON REQUEST BY THE SITE DESIGN ENGINEER OR OWNER, THE CHAMBER MANUFACTURER SHALL SUBMIT A STRUCTURAL EVALUATION FOR APPROVAL BEFORE DELIVERING CHAMBERS TO THE PROJECT SITE AS FOLLOWS:
   - THE STRUCTURAL EVALUATION SHALL BE SEALED BY A REGISTERED PROFESSIONAL ENGINEER.
   - THE STRUCTURAL EVALUATION SHALL DEMONSTRATE THAT THE SAFETY FACTORS ARE GREATER THAN OR EQUAL TO 1.95 FOR DEAD LOAD AND 1.75 FOR LIVE LOAD, THE MINIMUM REQUIRED BY ASTM F2787 AND BY SECTIONS 3 AND 12.12 OF THE AASHTO LRFD BRIDGE DESIGN SPECIFICATIONS FOR THERMOPLASTIC PIPE.
   - THE TEST DERIVED CREEP MODULUS AS SPECIFIED IN ASTM F2418 SHALL BE USED FOR PERMANENT DEAD LOAD DESIGN EXCEPT THAT IT SHALL BE THE 75-YEAR MODULUS USED FOR DESIGN.
9. CHAMBERS AND END CAPS SHALL BE PRODUCED AT AN ISO 9001 CERTIFIED MANUFACTURING FACILITY.
10. MANIFOLD SIZE TO BE DETERMINED BY SITE DESIGN ENGINEER. SEE TECHNICAL NOTE 6.32 FOR MANIFOLD SIZING GUIDANCE. DUE TO THE ADAPTATION OF THIS CHAMBER SYSTEM TO SPECIFIC SITE AND DESIGN CONSTRAINTS, IT MAY BE NECESSARY TO CUT AND COUPLE ADDITIONAL PIPE TO STANDARD MANIFOLD COMPONENTS IN THE FIELD.
11. ADS DOES NOT DESIGN OR PROVIDE MEMBRANE LINER SYSTEMS. TO MINIMIZE THE LEAKAGE POTENTIAL OF LINER SYSTEMS, THE MEMBRANE LINER SYSTEM SHOULD BE DESIGNED BY A KNOWLEDGEABLE GEOTEXTILE PROFESSIONAL AND INSTALLED BY A QUALIFIED CONTRACTOR.

©2025 ADS, INC.

IMPORTANT - NOTES FOR THE BIDDING AND INSTALLATION OF THE SC-800 SYSTEM

1. STORMTECH SC-800 CHAMBERS SHALL NOT BE INSTALLED UNTIL THE MANUFACTURER'S REPRESENTATIVE HAS COMPLETED A PRE-CONSTRUCTION MEETING WITH THE INSTALLERS.
2. STORMTECH SC-800 CHAMBERS SHALL BE INSTALLED IN ACCORDANCE WITH THE "STORMTECH SC-310/SC-740/SC-800/DC-780 CONSTRUCTION GUIDE".
3. CHAMBERS ARE NOT TO BE BACKFILLED WITH A DOZER OR AN EXCAVATOR SITUATED OVER THE CHAMBERS. STORMTECH RECOMMENDS 3 BACKFILL METHODS:
   - STONESHOOTER LOCATED OFF THE CHAMBER BED.
   - BACKFILL AS ROWS ARE BUILT USING AN EXCAVATOR ON THE FOUNDATION STONE OR SUBGRADE.
   - BACKFILL FROM OUTSIDE THE EXCAVATION USING A LONG BOOM HOE OR EXCAVATOR.
4. THE FOUNDATION STONE SHALL BE LEVELED AND COMPACTED PRIOR TO PLACING CHAMBERS.
5. JOINTS BETWEEN CHAMBERS SHALL BE PROPERLY SEATED PRIOR TO PLACING STONE.
6. MAINTAIN MINIMUM - 150 mm (6") SPACING BETWEEN THE CHAMBER ROWS.
7. EMBEDMENT STONE SURROUNDING CHAMBERS MUST BE A CLEAN, CRUSHED, ANGULAR STONE OR RECYCLED CONCRETE; AASHTO M43 #3, 357, 4, 467, 5, 56, OR 57.
8. THE CONTRACTOR MUST REPORT ANY DISCREPANCIES WITH CHAMBER FOUNDATION MATERIALS BEARING CAPACITIES TO THE SITE DESIGN ENGINEER.
9. ADS RECOMMENDS THE USE OF "FLEXSTORM CATCH IT" INSERTS DURING CONSTRUCTION FOR ALL INLETS TO PROTECT THE SUBSURFACE STORMWATER MANAGEMENT SYSTEM FROM CONSTRUCTION SITE RUNOFF.

NOTES FOR CONSTRUCTION EQUIPMENT

1. STORMTECH SC-800 CHAMBERS SHALL BE INSTALLED IN ACCORDANCE WITH THE "STORMTECH SC-310/SC-740/SC-800/DC-780 CONSTRUCTION GUIDE".
2. THE USE OF CONSTRUCTION EQUIPMENT OVER SC-800 CHAMBERS IS LIMITED:
   - NO EQUIPMENT IS ALLOWED ON BARE CHAMBERS.
   - NO RUBBER TIRED LOADERS, DUMP TRUCKS, OR EXCAVATORS ARE ALLOWED UNTIL PROPER FILL DEPTHS ARE REACHED IN ACCORDANCE WITH THE "STORMTECH SC-310/SC-740/SC-800/DC-780 CONSTRUCTION GUIDE".
   - WEIGHT LIMITS FOR CONSTRUCTION EQUIPMENT CAN BE FOUND IN THE "STORMTECH SC-310/SC-740/SC-800/DC-780 CONSTRUCTION GUIDE".
3. FULL 900 mm (36") OF STABILIZED COVER MATERIALS OVER THE CHAMBERS IS REQUIRED FOR DUMP TRUCK TRAVEL OR DUMPING.

USE OF A DOZER TO PUSH EMBEDMENT STONE BETWEEN THE ROWS OF CHAMBERS MAY CAUSE DAMAGE TO THE CHAMBERS AND IS NOT AN ACCEPTABLE BACKFILL METHOD. ANY CHAMBERS DAMAGED BY THE "DUMP AND PUSH" METHOD ARE NOT COVERED UNDER THE STORMTECH STANDARD WARRANTY.

CONTACT STORMTECH AT 1-800-821-6710 WITH ANY QUESTIONS ON INSTALLATION REQUIREMENTS OR WEIGHT LIMITS FOR CONSTRUCTION EQUIPMENT.

PROPOSED LAYOUT

6	STORMTECH SC-800 CHAMBERS
2	STORMTECH SC-800 END CAPS
250	STONE ABOVE (mm)
152	STONE BELOW (mm)
40	% STONE VOID
20.0	**INSTALLED SYSTEM VOLUME (m³) (PERIMETER STONE INCLUDED)**
29.7	SYSTEM AREA (m²)
32.5	SYSTEM PERIMETER (m)

PROPOSED ELEVATIONS

63.438	MAXIMUM ALLOWABLE GRADE (TOP OF PAVEMENT/UNPAVED)
61.533	MINIMUM ALLOWABLE GRADE (UNPAVED WITH TRAFFIC)
61.381	MINIMUM ALLOWABLE GRADE (UNPAVED NO TRAFFIC)
61.381	MINIMUM ALLOWABLE GRADE (BASE OF FLEXIBLE PAVEMENT)
61.381	MINIMUM ALLOWABLE GRADE (TOP OF RIGID PAVEMENT)
61.250	TOP OF STONE
61.000	TOP OF SC-800 CHAMBER
60.220	600 mm ISOLATOR ROW PLUS CONNECTION INVERT
60.162	BOTTOM OF SC-800 CHAMBER
60.010	UNDERDRAIN INVERT
60.010	BOTTOM OF STONE

NOTES

- THE STORMTECH SYSTEM DEPICTED DOES NOT CONTAIN PROPER WATER QUALITY MEASURES. ABSENCE OF WATER QUALITY MEASURES CAN RESULT IN UNTREATED STORMWATER. ADS RECOMMENDS THE USE OF ISOLATOR ROW PLUS AND AN UPSTREAM HIGH FLOW BYPASS ON ALL STORMTECH SYSTEMS TO PROPERLY DIRECT THE FIRST FLUSH.
- THE SITE DESIGN ENGINEER MUST CONSIDER THE EFFECTS OF POSSIBLE SATURATED SOILS ON NEARBY SYSTEMS, INCLUDING BUT NOT LIMITED TO, RETAINING WALLS, SLOPE CONSTRUCTION/STABILITY, OR BUILDINGS/STRUCTURES. NO FOUNDATION LOADS SHALL BE TRANSMITTED TO THE CHAMBERS.

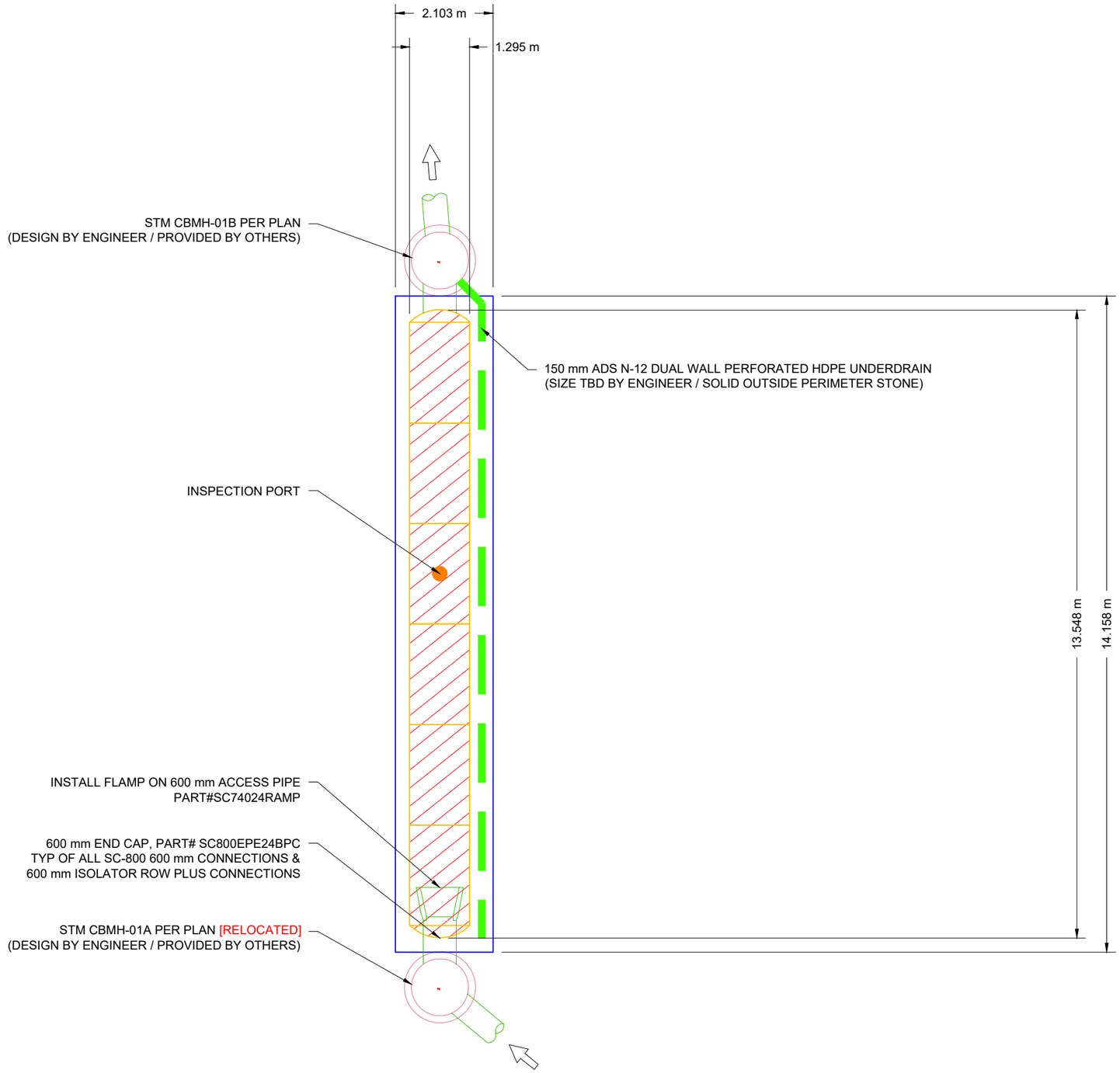

ISOLATOR ROW PLUS (SEE DETAIL)

PLACE MINIMUM 3.81 m OF ADSPLUS625 WOVEN GEOTEXTILE OVER BEDDING STONE AND UNDERNEATH CHAMBER FEET FOR SCOUR PROTECTION AT ALL CHAMBER INLET ROWS

THERMOPLASTIC LINER (SEE TECHNICAL NOTE 6.50 / PROVIDED BY OTHERS / DESIGN BY OTHERS)

30 CLEARY AVENUE
OTTAWA, ON.

DATE: 5/9/25 DRAWN: RCT
PROJECT #: S469925 CHECKED: RCT

DATE	DWN	CHK

THIS DRAWING IS NOT INTENDED FOR USE IN BIDDING OR CONSTRUCTION WITHOUT THE EOR'S PRIOR APPROVAL. EOR SHALL REVIEW THIS DRAWING PRIOR TO BIDDING AND/OR CONSTRUCTION. IT IS THE ULTIMATE RESPONSIBILITY OF THE EOR TO ENSURE THAT THE PRODUCT(S) DEPICTED AND ALL ASSOCIATED DETAILS MEET ALL APPLICABLE LAWS, REGULATIONS, AND PROJECT REQUIREMENTS.
THIS DRAWING HAS BEEN PREPARED BASED ON INFORMATION PROVIDED TO ADS/STORMTECH UNDER THE DIRECTION OF THE PROJECT'S ENGINEER OF RECORD ('EOR') OR OTHER PROJECT REPRESENTATIVE. THIS DRAWING IS NOT INTENDED FOR USE IN BIDDING OR CONSTRUCTION WITHOUT THE EOR'S

StormTech®
Chamber System

4640 TRUEMAN BLVD
HILLIARD, OH 43026

SCALE = 1 : 100

ACCEPTABLE FILL MATERIALS: STORMTECH SC-800 CHAMBER SYSTEMS

MATERIAL LOCATION		DESCRIPTION	AASHTO MATERIAL CLASSIFICATIONS	COMPACTION / DENSITY REQUIREMENT
D	**FINAL FILL:** FILL MATERIAL FOR LAYER 'D' STARTS FROM THE TOP OF THE 'C' LAYER TO THE BOTTOM OF FLEXIBLE PAVEMENT OR UNPAVED FINISHED GRADE ABOVE. NOTE THAT PAVEMENT SUBBASE MAY BE PART OF THE 'D' LAYER.	ANY SOIL/ROCK MATERIALS, NATIVE SOILS, OR PER ENGINEER'S PLANS. CHECK PLANS FOR PAVEMENT SUBGRADE REQUIREMENTS.	N/A	PREPARE PER SITE DESIGN ENGINEER'S PLANS. PAVED INSTALLATIONS MAY HAVE STRINGENT MATERIAL AND PREPARATION REQUIREMENTS.
C	**INITIAL FILL:** FILL MATERIAL FOR LAYER 'C' STARTS FROM THE TOP OF THE EMBEDMENT STONE ('B' LAYER) TO 15" (375 mm) ABOVE THE TOP OF THE CHAMBER. NOTE THAT PAVEMENT SUBBASE MAY BE A PART OF THE 'C' LAYER.	GRANULAR WELL-GRADED SOIL/AGGREGATE MIXTURES, <35% FINES OR PROCESSED AGGREGATE. MOST PAVEMENT SUBBASE MATERIALS CAN BE USED IN LIEU OF THIS LAYER.	AASHTO M145[1] A-1, A-2-4, A-3 OR AASHTO M43[1] 3, 357, 4, 467, 5, 56, 57, 6, 67, 68, 7, 78, 8, 89, 9, 10	BEGIN COMPACTIONS AFTER 12" (300 mm) OF MATERIAL OVER THE CHAMBERS IS REACHED. COMPACT ADDITIONAL LAYERS IN 6" (150 mm) MAX LIFTS TO A MIN. 95% PROCTOR DENSITY FOR WELL GRADED MATERIAL AND 95% RELATIVE DENSITY FOR PROCESSED AGGREGATE MATERIALS. ROLLER GROSS VEHICLE WEIGHT NOT TO EXCEED 12,000 lbs (53 kN). DYNAMIC FORCE NOT TO EXCEED 20,000 lbs (89 kN).
B	**EMBEDMENT STONE:** FILL SURROUNDING THE CHAMBERS FROM THE FOUNDATION STONE ('A' LAYER) TO THE 'C' LAYER ABOVE.	CLEAN, CRUSHED, ANGULAR STONE OR RECYCLED CONCRETE[5]	AASHTO M43[1] 3, 357, 4, 467, 5, 56, 57	NO COMPACTION REQUIRED.
A	**FOUNDATION STONE:** FILL BELOW CHAMBERS FROM THE SUBGRADE UP TO THE FOOT (BOTTOM) OF THE CHAMBER.	CLEAN, CRUSHED, ANGULAR STONE OR RECYCLED CONCRETE[5]	AASHTO M43[1] 3, 357, 4, 467, 5, 56, 57	PLATE COMPACT OR ROLL TO ACHIEVE A FLAT SURFACE.[2,3]

PLEASE NOTE:
1. THE LISTED AASHTO DESIGNATIONS ARE FOR GRADATIONS ONLY. THE STONE MUST ALSO BE CLEAN, CRUSHED, ANGULAR. FOR EXAMPLE, A SPECIFICATION FOR #4 STONE WOULD STATE: "CLEAN, CRUSHED, ANGULAR NO. 4 (AASHTO M43) STONE".
2. STORMTECH COMPACTION REQUIREMENTS ARE MET FOR 'A' LOCATION MATERIALS WHEN PLACED AND COMPACTED IN 6" (150 mm) (MAX) LIFTS USING TWO FULL COVERAGES WITH A VIBRATORY COMPACTOR.
3. WHERE INFILTRATION SURFACES MAY BE COMPROMISED BY COMPACTION, FOR STANDARD DESIGN LOAD CONDITIONS, A FLAT SURFACE MAY BE ACHIEVED BY RAKING OR DRAGGING WITHOUT COMPACTION EQUIPMENT. FOR SPECIAL LOAD DESIGNS, CONTACT STORMTECH FOR COMPACTION REQUIREMENTS.
4. ONCE LAYER 'C' IS PLACED, ANY SOIL/MATERIAL CAN BE PLACED IN LAYER 'D' UP TO THE FINISHED GRADE. MOST PAVEMENT SUBBASE SOILS CAN BE USED TO REPLACE THE MATERIAL REQUIREMENTS OF LAYER 'C' OR 'D' AT THE SITE DESIGN ENGINEER'S DISCRETION.
5. WHERE RECYCLED CONCRETE AGGREGATE IS USED IN LAYERS 'A' OR 'B' THE MATERIAL SHOULD ALSO MEET THE ACCEPTABILITY CRITERIA OUTLINED IN TECHNICAL NOTE 6.20 "RECYCLED CONCRETE STRUCTURAL BACKFILL".

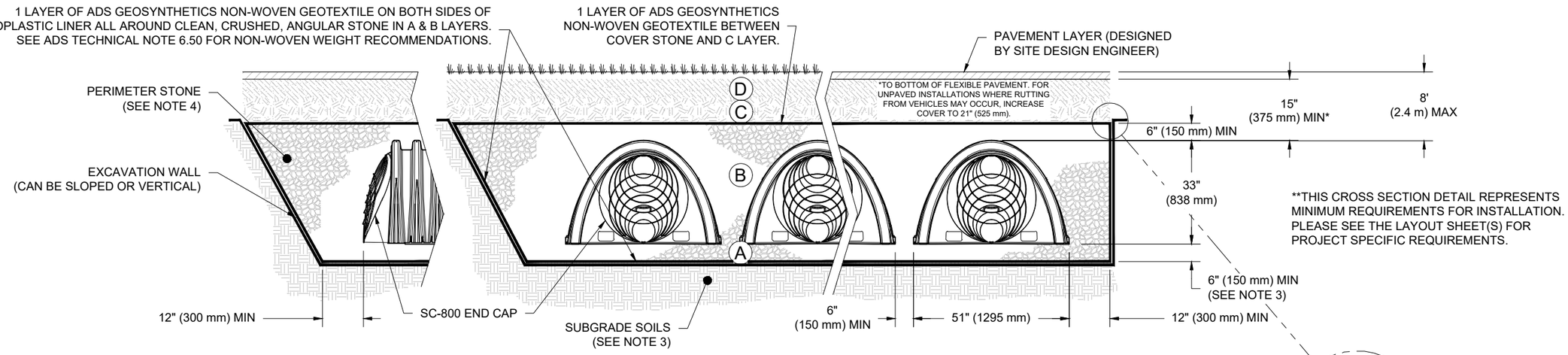

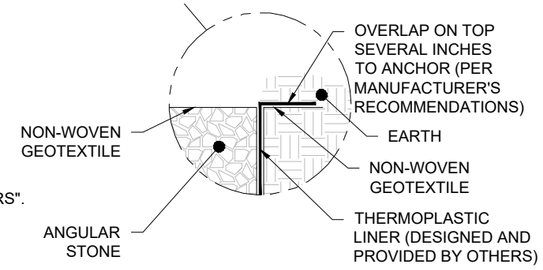

THERMOPLASTIC LINER DETAIL

NOTES:

1. CHAMBERS SHALL MEET THE REQUIREMENTS OF ASTM F2418, "STANDARD SPECIFICATION FOR POLYPROPYLENE (PP) CORRUGATED WALL STORMWATER COLLECTION CHAMBERS".
2. SC-800 CHAMBERS SHALL BE DESIGNED IN ACCORDANCE WITH ASTM F2787 "STANDARD PRACTICE FOR STRUCTURAL DESIGN OF THERMOPLASTIC CORRUGATED WALL STORMWATER COLLECTION CHAMBERS".
3. THE SITE DESIGN ENGINEER IS RESPONSIBLE FOR ASSESSING THE BEARING RESISTANCE (ALLOWABLE BEARING CAPACITY) OF THE SUBGRADE SOILS AND THE DEPTH OF FOUNDATION STONE WITH CONSIDERATION FOR THE RANGE OF EXPECTED SOIL MOISTURE CONDITIONS. REFERENCE STORMTECH DESIGN MANUAL FOR BEARING CAPACITY GUIDANCE.
4. PERIMETER STONE MUST BE EXTENDED HORIZONTALLY TO THE EXCAVATION WALL FOR BOTH VERTICAL AND SLOPED EXCAVATION WALLS.
5. REQUIREMENTS FOR HANDLING AND INSTALLATION:
   - TO MAINTAIN THE WIDTH OF CHAMBERS DURING SHIPPING AND HANDLING, CHAMBERS SHALL HAVE INTEGRAL, INTERLOCKING STACKING LUGS.
   - TO ENSURE A SECURE JOINT DURING INSTALLATION AND BACKFILL, THE HEIGHT OF THE CHAMBER JOINT SHALL NOT BE LESS THAN 2".
   - TO ENSURE THE INTEGRITY OF THE ARCH SHAPE DURING INSTALLATION, a) THE ARCH STIFFNESS CONSTANT AS DEFINED IN SECTION 6.2.8 OF ASTM F2418 SHALL BE GREATER THAN OR EQUAL TO 750 LBS/FT/%. AND b) TO RESIST CHAMBER DEFORMATION DURING INSTALLATION AT ELEVATED TEMPERATURES (ABOVE 73° F / 23° C), CHAMBERS SHALL BE PRODUCED FROM REFLECTIVE GOLD OR YELLOW COLORS.

30 CLEARY AVENUE
OTTAWA, ON.

DRAWN: RCT
CHECKED: RCT
DATE: 5/9/25
PROJECT #: S469925

DATE	DWN	CHK

StormTech® Chamber System

4640 TRUEMAN BLVD
HILLIARD, OH 43026

THIS DRAWING HAS BEEN PREPARED BASED ON INFORMATION PROVIDED TO ADS/STORMTECH UNDER THE DIRECTION OF THE PROJECT'S ENGINEER OF RECORD ('EOR') OR OTHER PROJECT REPRESENTATIVE. THIS DRAWING IS NOT INTENDED FOR USE IN BIDDING OR CONSTRUCTION WITHOUT THE EOR'S PRIOR APPROVAL. EOR SHALL REVIEW THIS DRAWING PRIOR TO BIDDING AND/OR CONSTRUCTION. IT IS THE ULTIMATE RESPONSIBILITY OF THE EOR TO ENSURE THAT THE PRODUCT(S) DEPICTED AND ALL ASSOCIATED DETAILS MEET ALL APPLICABLE LAWS, REGULATIONS, AND PROJECT REQUIREMENTS.

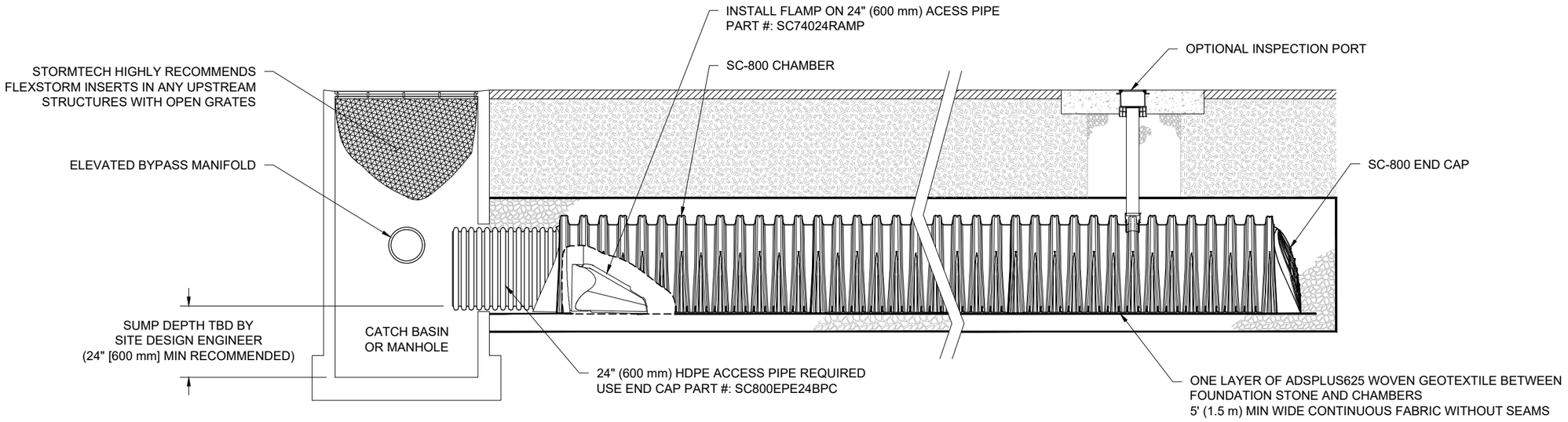

SC-800 ISOLATOR ROW PLUS DETAIL
NTS

INSPECTION & MAINTENANCE

STEP 1) INSPECT ISOLATOR ROW PLUS FOR SEDIMENT
- A. INSPECTION PORTS (IF PRESENT)
  - A.1. REMOVE/OPEN LID ON NYLOPLAST INLINE DRAIN
  - A.2. REMOVE AND CLEAN FLEXSTORM FILTER IF INSTALLED
  - A.3. USING A FLASHLIGHT AND STADIA ROD, MEASURE DEPTH OF SEDIMENT AND RECORD ON MAINTENANCE LOG
  - A.4. LOWER A CAMERA INTO ISOLATOR ROW PLUS FOR VISUAL INSPECTION OF SEDIMENT LEVELS (OPTIONAL)
  - A.5. IF SEDIMENT IS AT, OR ABOVE, 3" (80 mm) PROCEED TO STEP 2. IF NOT, PROCEED TO STEP 3.
- B. ALL ISOLATOR PLUS ROWS
  - B.1. REMOVE COVER FROM STRUCTURE AT UPSTREAM END OF ISOLATOR ROW PLUS
  - B.2. USING A FLASHLIGHT, INSPECT DOWN THE ISOLATOR ROW PLUS THROUGH OUTLET PIPE
    - i) MIRRORS ON POLES OR CAMERAS MAY BE USED TO AVOID A CONFINED SPACE ENTRY
    - ii) FOLLOW OSHA REGULATIONS FOR CONFINED SPACE ENTRY IF ENTERING MANHOLE
  - B.3. IF SEDIMENT IS AT, OR ABOVE, 3" (80 mm) PROCEED TO STEP 2. IF NOT, PROCEED TO STEP 3.

STEP 2) CLEAN OUT ISOLATOR ROW PLUS USING THE JETVAC PROCESS
- A. A FIXED CULVERT CLEANING NOZZLE WITH REAR FACING SPREAD OF 45" (1.1 m) OR MORE IS PREFERRED
- B. APPLY MULTIPLE PASSES OF JETVAC UNTIL BACKFLUSH WATER IS CLEAN
- C. VACUUM STRUCTURE SUMP AS REQUIRED

STEP 3) REPLACE ALL COVERS, GRATES, FILTERS, AND LIDS; RECORD OBSERVATIONS AND ACTIONS.

STEP 4) INSPECT AND CLEAN BASINS AND MANHOLES UPSTREAM OF THE STORMTECH SYSTEM.

NOTES

1. INSPECT EVERY 6 MONTHS DURING THE FIRST YEAR OF OPERATION. ADJUST THE INSPECTION INTERVAL BASED ON PREVIOUS OBSERVATIONS OF SEDIMENT ACCUMULATION AND HIGH WATER ELEVATIONS.

2. CONDUCT JETTING AND VACTORING ANNUALLY OR WHEN INSPECTION SHOWS THAT MAINTENANCE IS NECESSARY.

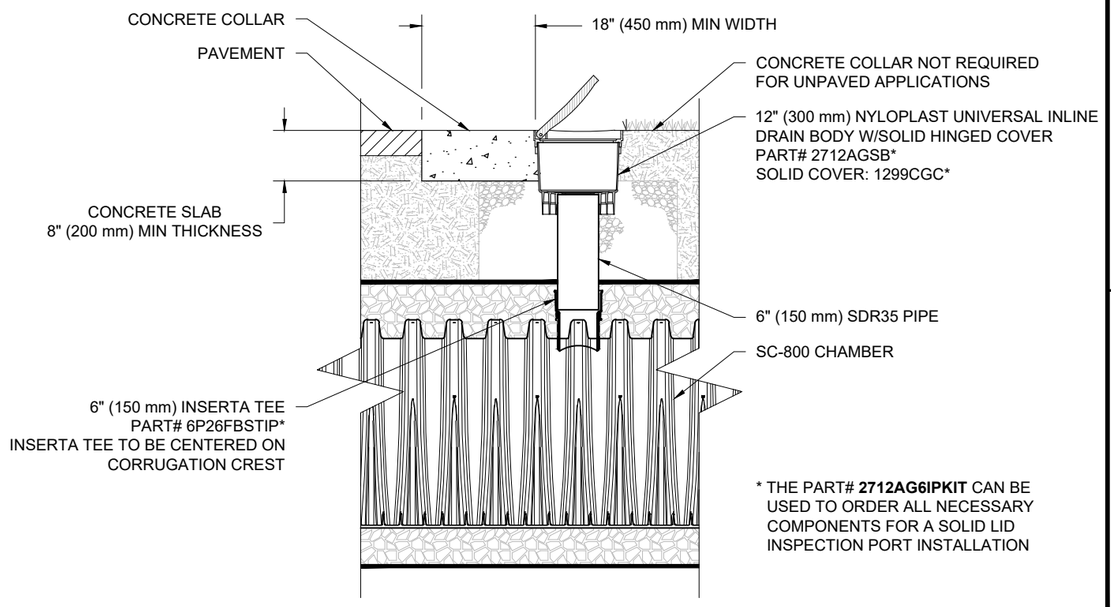

SC-800 6" (150 mm) INSPECTION PORT DETAIL
NTS

30 CLEARY AVENUE
OTTAWA, ON.

DATE: 5/9/25 | DRAWN: RCT
PROJECT #: S469925 | CHECKED: RCT

DATE	DWN	CHK

StormTech® Chamber System

4640 TRUEMAN BLVD
HILLIARD, OH 43026

THIS DRAWING HAS BEEN PREPARED BASED ON INFORMATION PROVIDED TO ADS/STORMTECH UNDER THE DIRECTION OF THE PROJECT'S ENGINEER OF RECORD ('EOR') OR OTHER PROJECT REPRESENTATIVE. THIS DRAWING IS NOT INTENDED FOR USE IN BIDDING OR CONSTRUCTION WITHOUT THE EOR'S PRIOR APPROVAL. EOR SHALL REVIEW THIS DRAWING PRIOR TO BIDDING AND/OR CONSTRUCTION. IT IS THE ULTIMATE RESPONSIBILITY OF THE EOR TO ENSURE THAT THE PRODUCT(S) DEPICTED AND ALL ASSOCIATED DETAILS MEET ALL APPLICABLE LAWS, REGULATIONS, AND PROJECT REQUIREMENTS.

UNDERDRAIN DETAIL

NTS

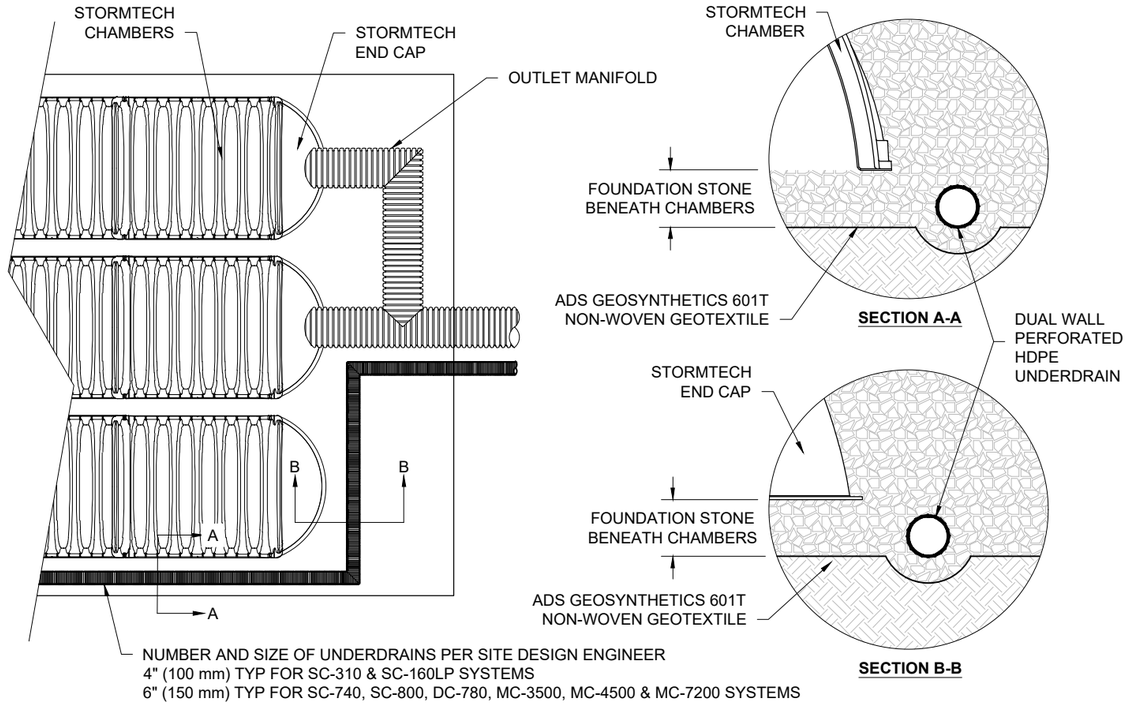

SC-800 TECHNICAL SPECIFICATION

NTS

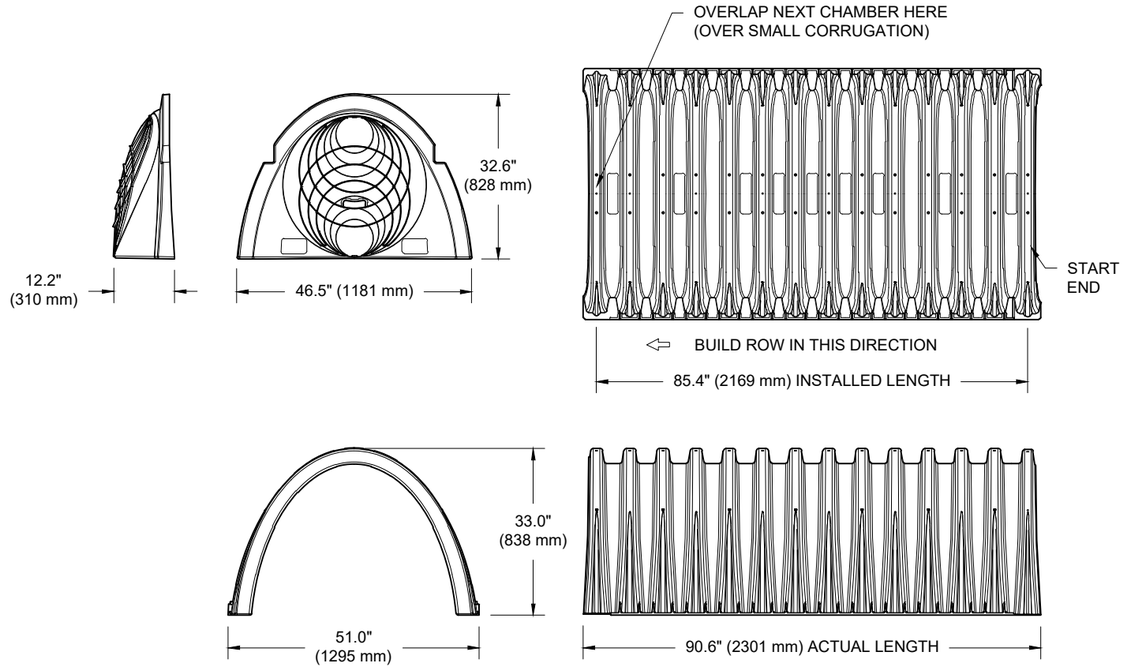

NOMINAL CHAMBER SPECIFICATIONS

SIZE (W X H X INSTALLED LENGTH)	51.0" X 33.0" X 85.4"	(1295 mm X 838 mm X 2169 mm)
CHAMBER STORAGE	50.6 CUBIC FEET	(1.43 m³)
MINIMUM INSTALLED STORAGE*	81.0 CUBIC FEET	(2.29 m³)
WEIGHT	81.8 lbs.	(37.1 kg)

NOMINAL END CAP SPECIFICATIONS

SIZE (W X H X INSTALLED LENGTH)	46.5" X 32.6" X 10.5"	(1181 mm X 828 mm X 267 mm)
END CAP STORAGE	3.4 CUBIC FEET	(0.09 m³)
MINIMUM INSTALLED STORAGE**	15.4 CUBIC FEET	(0.43 m³)
WEIGHT	15.7 lbs.	(7.1 kg)

* ASSUMES 6" (152 mm) STONE ABOVE, BELOW, AND BETWEEN CHAMBERS
**ASSUMES 6" (152 mm) STONE ABOVE AND BELOW END CAPS, 6" (152 mm) BETWEEN ROWS, 12" (305 mm) BEYOND END CAPS

PRE-CORED HOLES AT BOTTOM OF END CAP FOR PART NUMBERS ENDING WITH "BPC"
PRE-CORED HOLES AT TOP OF END CAP FOR PART NUMBERS ENDING WITH "TPC"

PART #	STUB	B	C
SC800EPE06TPC	6" (150 mm)	21.4" (544 mm)	---
SC800EPE06BPC		---	0.9" (23 mm)
SC800EPE08TPC	8" (200 mm)	19.2" (488 mm)	---
SC800EPE08BPC		---	1.0" (25 mm)
SC800EPE10TPC	10" (250 mm)	17.0" (432 mm)	---
SC800EPE10BPC		---	1.2" (30 mm)
SC800EPE12TPC	12" (300 mm)	14.4" (366 mm)	---
SC800EPE12BPC		---	1.6" (41 mm)
SC800EPE15TPC	15" (375 mm)	11.3" (287 mm)	---
SC800EPE15BPC		---	1.7" (43 mm)
SC800EPE18TPC	18" (450 mm)	8.0" (203 mm)	---
SC800EPE18BPC		---	2.0" (51 mm)
SC800EPE24BPC	24" (600 mm)	---	2.3" (58 mm)
SC800EPE	NONE	SOLID END CAP	

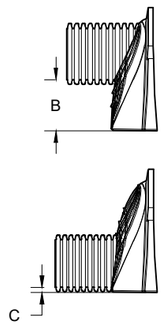

NOTE: ALL DIMENSIONS ARE NOMINAL

30 CLEARY AVENUE
OTTAWA, ON.

DATE: 5/9/25 | DRAWN: RCT | CHECKED: RCT
PROJECT #: S469925

DATE	DWN	CHK

StormTech® Chamber System

4640 TRUEMAN BLVD
HILLIARD, OH 43026

THIS DRAWING HAS BEEN PREPARED BASED ON INFORMATION PROVIDED TO ADS/STORMTECH UNDER THE DIRECTION OF THE PROJECT'S ENGINEER OF RECORD ("EOR") OR OTHER PROJECT REPRESENTATIVE. THIS DRAWING IS NOT INTENDED FOR USE IN BIDDING OR CONSTRUCTION WITHOUT THE EOR'S PRIOR APPROVAL. EOR SHALL REVIEW THIS DRAWING PRIOR TO BIDDING AND/OR CONSTRUCTION. IT IS THE ULTIMATE RESPONSIBILITY OF THE EOR TO ENSURE THAT THE PRODUCT(S) DEPICTED AND ALL ASSOCIATED DETAILS MEET ALL APPLICABLE LAWS, REGULATIONS, AND PROJECT REQUIREMENTS.

6.5-525mmØ STM SEWER @1.0%

RMWATER FROM 851 RICHMOND
ACKYARD TO EX.GARDENS. STM
THROUGH THE PROP BUILDING
PARKING GARAGE.

LEVEL 1-4 FOOTPRINT = 973sqm
LEVEL 5-15 FOOTPRINT = 778sqm
LEVEL 16 FOOTPRINT = 599sqm
GROSS FLOOR AREA = 13,520sqm

LIMIT OF LEVELS 1-4

LIMIT OF LEVEL 16 STEP BACK

EXTENT OF PARKING BELOW

LEVELS 2-4

LIMIT OF LEVELS 5

UNIT TERRACES
GROUND FLOOR

ROPOSED BUILDING PARCELS
ASPIRE AREA = 2100 m²

GENERATOR

EX STM CBMH1
T/G = 124.39
SW INV = 60.08
E INV = 59.93

PROP STM 4.1m - 500mmØ PVC @ -1.69%

PROP STM CBMH-01B
T/G = 62.00
NE INV = 60.01

EX. 250mmØ STM SEWER
PIPE TO BE REMOVED

PROP STM CBMH-01A
T/G = 62.00
SW INV = 60.22

PROP STM 8.6m - 500mmØ PVC @ 1.62%

EX STM CBMH9
T/G = 62.95
SE INV = 60.38
NE INV = 60.36

EXISTING CHAIN LINK FENCE

mØ STM- SEWER TO BE RE-ROUTED THROUGH
KET BUILDING PARKING GARAGE. INVERTS AND
CATION TO BE COORDINATED W/ MECHANICAL

EX. STM MH4A
EX. T/G=63.56

CONCRETE BUILDING OVERHANG

STEPS

BENCHMARK METHOD
SITE BYDRAINAGE
SURFACE ELEVATION=63.42
TELEVATION

Project: **30 Cleary Avenue**



Chamber Model -	SC-800	
Units -	**Metric**	
Number of Chambers -	6	
Number of End Caps -	2	
Voids in the stone (porosity) -	40	%
Base of Stone Elevation -	60.01	m
Amount of Stone Above Chambers -	250	mm
Amount of Stone Below Chambers -	152	mm

Area of System- 29.7 sq.meters Min. Area - 20.5 sq.meters

StormTech SC-800 Cumulative Storage Volumes

Height of System (mm)	Incremental Single Chamber (cubic meters)	Incremental Single End Cap (cubic meters)	Incremental Chambers (cubic meters)	Incremental End Cap (cubic meters)	Incremental Stone (cubic meters)	Incremental Ch, EC and Stone (cubic meters)	Cumulative System (cubic	Elevation (meters)
1245	0.000	0.000	0.00	0.00	0.30	0.30	20.06	61.25
1219	0.000	0.000	0.00	0.00	0.30	0.30	19.76	61.23
1194	0.000	0.000	0.00	0.00	0.30	0.30	19.46	61.20
1168	0.000	0.000	0.00	0.00	0.30	0.30	19.16	61.18
1143	0.000	0.000	0.00	0.00	0.30	0.30	18.86	61.15
1118	0.000	0.000	0.00	0.00	0.30	0.30	18.55	61.13
1092	0.000	0.000	0.00	0.00	0.30	0.30	18.25	61.10
1067	0.000	0.000	0.00	0.00	0.30	0.30	17.95	61.08
1041	0.000	0.000	0.00	0.00	0.30	0.30	17.65	61.05
1016	0.000	0.000	0.00	0.00	0.30	0.30	17.35	61.03
991	0.002	0.000	0.01	0.00	0.30	0.31	17.05	61.00
965	0.006	0.000	0.03	0.00	0.29	0.32	16.74	60.98
940	0.008	0.000	0.05	0.00	0.28	0.33	16.41	60.95
914	0.014	0.000	0.09	0.00	0.27	0.35	16.08	60.92
889	0.021	0.000	0.13	0.00	0.25	0.38	15.73	60.90
864	0.025	0.001	0.15	0.00	0.24	0.39	15.35	60.87
838	0.029	0.001	0.17	0.00	0.23	0.41	14.96	60.85
813	0.032	0.001	0.19	0.00	0.22	0.42	14.55	60.82
787	0.034	0.001	0.21	0.00	0.22	0.43	14.13	60.80
762	0.037	0.002	0.22	0.00	0.21	0.44	13.71	60.77
737	0.039	0.002	0.23	0.00	0.21	0.44	13.27	60.75
711	0.041	0.002	0.24	0.00	0.20	0.45	12.83	60.72
686	0.043	0.002	0.26	0.00	0.20	0.46	12.38	60.70
660	0.044	0.003	0.27	0.01	0.19	0.46	11.92	60.67
635	0.046	0.003	0.28	0.01	0.19	0.47	11.45	60.65
610	0.047	0.003	0.28	0.01	0.19	0.48	10.98	60.62
584	0.049	0.003	0.29	0.01	0.18	0.48	10.51	60.59
559	0.050	0.004	0.30	0.01	0.18	0.49	10.03	60.57
533	0.051	0.004	0.31	0.01	0.18	0.49	9.54	60.54
508	0.052	0.004	0.31	0.01	0.17	0.50	9.05	60.52
483	0.054	0.004	0.32	0.01	0.17	0.50	8.55	60.49
457	0.055	0.004	0.33	0.01	0.17	0.50	8.05	60.47
432	0.056	0.004	0.33	0.01	0.16	0.51	7.55	60.44
406	0.057	0.004	0.34	0.01	0.16	0.51	7.04	60.42
381	0.057	0.005	0.34	0.01	0.16	0.51	6.53	60.39
356	0.058	0.005	0.35	0.01	0.16	0.52	6.02	60.37
330	0.059	0.005	0.35	0.01	0.16	0.52	5.50	60.34
305	0.060	0.005	0.36	0.01	0.15	0.52	4.98	60.31
279	0.060	0.005	0.36	0.01	0.15	0.53	4.46	60.29
254	0.061	0.005	0.37	0.01	0.15	0.53	3.93	60.26
229	0.062	0.005	0.37	0.01	0.15	0.53	3.41	60.24
203	0.062	0.005	0.37	0.01	0.15	0.53	2.88	60.21
178	0.063	0.004	0.38	0.01	0.15	0.53	2.34	60.19
152	0.000	0.000	0.00	0.00	0.30	0.30	1.81	60.16
127	0.000	0.000	0.00	0.00	0.30	0.30	1.51	60.14
102	0.000	0.000	0.00	0.00	0.30	0.30	1.21	60.11
76	0.000	0.000	0.00	0.00	0.30	0.30	0.91	60.09
51	0.000	0.000	0.00	0.00	0.30	0.30	0.60	60.06
25	0.000	0.000	0.00	0.00	0.30	0.30	0.30	60.04