30 CLEARY AVENUE ODAYANHAWAY DEVELOPMENT

30 CLEARY AVENUE, OTTAWA

REVISION 03



KEY PLAN (N.T.S.)

DRAWING INDEX	
TITLE PAGE	
SEDIMENT AND EROSION CONTROL PLAN	C101
GRADING AND DRAINAGE PLAN	C301
SERVICING PLAN	C401
SERVICING PLAN- SECONDARY WATER	C402
PLAN AND PROFILE PROP WATER SERVICE STA. 0+000 TO 0+166	C501
PLAN AND PROFILE PROP WATER SERVICE STA. 0+165 TO 0+252	C502
STORMWATER MANAGEMENT PLAN	C601
PRE-DEVELOPMENT WATERSHED PLAN	C701
POST-DEVELOPMENT WATERSHED PLAN	C702
CONSTRUCTION DETAIL PLAN	C901
CONSTRUCTION DETAIL PLAN	C902

LRL
ENGINEERING | INGÉNIERIE
5430 Canotek Road | Ottawa, ON, K1J 9G2
www.lrl.ca | (613) 842-3434

30 CLEARY AVENUE ODAYANHAWAY DEVELOPMENT
30 CLEARY AVENUE, OTTAWA
REV.03 - ISSUED FOR APPROVAL - OCTOBER 2026
LRL PROJECT no: 230437

LICENSED PROFESSIONAL ENGINEER
V. JOHNSON
100510576
10-14-2026
PROVINCE OF ONTARIO

NOT AUTHENTIC UNLESS SIGNED AND DATED

GENERAL NOTES

1. ALL WORKS MATERIALS SHALL CONFIRM TO THE LAST REVISION OF THE STANDARDS AND SPECIFICATIONS FOR THE CITY OF OTTAWA, ONTARIO PROVINCIAL STANDARD DRAWINGS (OPSD) AND SPECIFICATIONS (OPSS), WHERE APPLICABLE. LOCAL UTILITY STANDARDS AND MINISTRY OF TRANSPORTATION STANDARDS WILL APPLY WHERE REQUIRED.
2. THE CONTRACTORS SHALL CONFIRM THE LOCATION OF ALL EXISTING UTILITIES WITHIN THE SITE AND ADJACENT WORK AREAS. THE CONTRACTORS SHALL BE RESPONSIBLE FOR PROTECTING ALL EXISTING UTILITIES TO THE SATISFACTION OF THE AUTHORITY HAVING JURISDICTION. THE CONTRACTOR SHALL BE RESPONSIBLE FOR THE REPAIR OR REPLACEMENT OF ANY SERVICES OR UTILITIES DISTURBED DURING CONSTRUCTION , TO THE SATISFACTION OF THE AUTHORITY HAVING JURISDICTION.
3. ALL DIMENSIONS SHALL BE CHECKED AND VERIFIED IN THE FIELD BY THE CONTRACTOR PRIOR TO THE START OF CONSTRUCTION, ANY DISCREPANCIES SHALL BE REPORTED IMMEDIATELY TO THE ENGINEER. LOST TIME DUE TO FAILURE OF THE CONTRACTORS TO CONFIRM UTILITY LOCATIONS AND NOTIFY ENGINEER OF POSSIBLE CONFLICTS PRIOR TO CONSTRUCTION WILL BE AT CONTRACTORS EXPENSE.
4. ANY AREA BEYOND THE LIMIT OF THE SITE DISTURBED DURING CONSTRUCTION SHALL BE RESTORED TO ORIGINAL CONDITION OR BETTER TO THE SATISFACTION OF THE AUTHORITY HAVING JURISDICTION AT THE CONTRACTOR'S EXPENSE. RELOCATING OF EXISTING SERVICES AND/OR UTILITIES SHALL BE AS SHOWN ON THE DRAWINGS OR DETECTED BY THE ENGINEER AT THE EXPENSE OF DEVELOPERS.
5. ALL WORK SHALL BE COMPLETED IN ACCORDANCE WITH THE 'OCCUPATIONAL HEALTH AND SAFETY ACT AND REGULATIONS FOR CONSTRUCTION PROJECTS'. THE GENERAL CONTRACTORS SHALL BE DEEMED TO BE THE 'CONTRACTOR' AS DEFINED IN THE ACT.
6. ALL THE CONSTRUCTION SIGNAGE MUST CONFIRM TO THE MINISTRY OF TRANSPORTATION OF ONTARIO MANUAL OF UNIFORM TRAFFIC CONTROL DEVICES PER LATEST AMENDMENT.
7. THE CONTRACTOR IS ADVISED THAT WORKS BY OTHERS MAY BE ONGOING DURING THE PERIOD OF THE CONTRACT. THE CONTRACTOR SHALL COORDINATE CONSTRUCTION ACTIVITIES TO PREVENT CONFLICTS.
8. ALL DIMENSIONS ARE IN METERS UNLESS SPECIFIED OTHERWISE.
9. THERE WILL BE NO SUBSTITUTION OF MATERIALS UNLESS PRIOR WRITTEN APPROVAL IS RECEIVED FROM THE ENGINEER.
10. ALL CONSTRUCTION SHALL BE CARRIED OUT IN ACCORDANCE WITH THE RECOMMENDATIONS MADE IN THE GEOTECHNICAL REPORT.
11. FOR DETAILS RELATING TO STORMWATER MANAGEMENT AND ROOF DRAINAGE REFER TO THE SITE SERVICING AND STORMWATER MANAGEMENT REPORT.
12. ALL SEWERS CONSTRUCTED WITH GRADES LESS THAN 1.0% SHALL BE INSTALLED USING LASER ALIGNMENT AND CHECKED WITH LEVEL INSTRUMENT PRIOR TO BACKFILLING.
13. THE CONTRACTOR IS RESPONSIBLE FOR OBTAINING ALL PERMITS REQUIRED AND TO BEAR THE COST OF THE SAME.
14. THE CONTRACTOR SHALL BE RESPONSIBLE FOR ADDITIONAL BEDDING, OR ADDITIONAL STRENGTH PIPE IF THE MAXIMUM TRENCH WIDTH AS SPECIFIED BY OPSD IS EXCEEDED.
15. ALL PIPE/CULVERT SECTION SIZES REFER TO INSIDE DIMENSIONS.
16. SHOULD DEEPLY BURIED ARCHAEOLOGICAL REMAINS BE FOUND ON THE PROPERTY DURING CONSTRUCTION ACTIVITIES, THE HERITAGE OPERATIONS UNIT OF THE ONTARIO MINISTRY OF CULTURE MUST BE NOTIFIED IMMEDIATELY.
17. ALL NECESSARY CLEARING AND GRUBBING SHALL BE COMPLETED BY THE CONTRACTOR. REVIEW WITH CONTRACT ADMINISTRATOR AND THE CITY OF OTTAWA PRIOR TO ANY TREE CUTTING/REMOVAL.
18. DRAWINGS SHALL BE READ ON CONJUNCTION WITH ARCHITECTURAL SITE PLAN.
19. THE CONTRACTOR SHALL PROVIDE THE PROJECT ENGINEER ON SET OF AS CONSTRUCTED SITE SERVICING AND GRADING DRAWINGS.
20. BENCHMARKS: IT IS THE RESPONSIBILITY OF THE CONTRACTOR TO VERIFY THAT THE SITE BENCHMARK(S) HAS NOT BEEN ALTERED OR DISTURBED AND THAT ITS RELATIVE ELEVATION AND DESCRIPTION AGREES WITH THE INFORMATION DEPICTED ON THIS PLAN.

EROSION AND SEDIMENT CONTROL NOTES

GENERAL

THE CONTRACTOR SHALL IMPLEMENT BEST MANAGEMENT PRACTICES, TO PROVIDE FOR PROTECTION OF THE AREA DRAINAGE SYSTEM AND THE RECEIVING WATERCOURSE, DURING CONSTRUCTION ACTIVITIES. THE CONTRACTOR ACKNOWLEDGES THAT FAILURE TO IMPLEMENT APPROPRIATE EROSION AND SEDIMENT CONTROL MEASURES MAY BE SUBJECT TO PENALTIES IMPOSED BY ANY APPLICABLE REGULATORY AGENCY.

THE CONTRACTOR ACKNOWLEDGES THAT SURFACE EROSION AND SEDIMENT RUNOFF RESULTING FROM THEIR CONSTRUCTION OPERATIONS HAS POTENTIAL TO CAUSE A DETRIMENTAL IMPACT TO ANY DOWNSTREAM WATERCOURSE OR SEWER, AND THAT ALL CONSTRUCTION OPERATIONS THAT MAY IMPACT UPON WATER QUALITY SHALL BE CARRIED OUT IN MANNER THAT STRICTLY MEETS THE REQUIREMENT OF ALL APPLICABLE LEGISLATION AND REGULATIONS.

AS SUCH, THE CONTRACTOR SHALL BE RESPONSIBLE FOR CARRYING OUT THEIR OPERATIONS, AND SUPPLYING AND INSTALLING ANY APPROPRIATE CONTROL MEASURES, SO AS TO PREVENT SEDIMENT LADEN RUNOFF ENTERING ANY SEWER OR WATERCOURSE WITHIN OR DOWNSTREAM OF THE WORKING AREA.

THE CONTRACTOR ACKNOWLEDGES THAT NO ONE MEASURE IS LIKELY TO BE 100% EFFECTIVELY FOR EROSION PROTECTION AND CONTROLLING SEDIMENT RUNOFF AND DISCHARGES FROM THE SITE. THEREFORE, WHERE NECESSARY THE CONTRACTOR SHALL IMPLEMENT ADDITIONAL MEASURES ARRANGED IN SUCH MANNER AS TO MITIGATE SEDIMENT RELEASE FROM THE CONSTRUCTION OPERATIONS AND ACHIEVE SPECIFIC MAXIMUM PERMITTED CRITERIA WHERE APPLICABLE. SUGGESTED ON-SITE MEASURES MAY INCLUDE, BUT SHALL NOT BE LIMITED TO, THE FOLLOWING METHODS: SEDIMENT PONDS, FILTER BAGS, PUMP FILTERS, SETTLING TANKS, SILT FENCE, STRAW BALES, FILTER CLOTHS, CATCH BASIN FILTERS, CHECK DAMS AND/OR OTHER RECOGNIZED TECHNOLOGIES AND METHOD AVAILABLE AT THE TIME OF CONSTRUCTION. SPECIFIC MEASURES SHALL BE INSTALLED IN ACCORDANCE WITH REQUIREMENTS OF OPSS 577 WHERE APPROPRIATE, OR IN ACCORDANCE WITH MANUFACTURER'S RECOMMENDATIONS.

WHERE, IN THE OPINION OF THE CONTRACT ADMINISTRATOR OR REGULATORY AGENCY, THE INSTALLED CONTROL MEASURES FAIL TO PERFORM ADEQUATELY, THE CONTRACTOR SHALL SUPPLY AND INSTALL ADDITIONAL OR ALTERNATIVE MEASURES AS DIRECTED BY THE CONTRACT ADMINISTRATOR OR REGULATORY AGENCY, AS SUCH, THE CONTRACTOR SHALL HAVE ADDITIONAL CONTROL MATERIALS ON SITE AT ALL TIME WHICH ARE EASILY ACCESSIBLE AND MAY BE IMPLEMENTED BY HIM AT THE MOMENT'S NOTICE.

PRIOR TO COMMENCING WORK, THE CONTRACTOR SHALL SUBMIT TO THE CONTRACT ADMINISTRATOR SIX COPIES OF A DETAILED EROSION AND SEDIMENT CONTROL PLAN (ESCP). THE ESCP WILL CONSIST OF WRITTEN DESCRIPTION AND DETAILED DRAWINGS INDICATING THE ON-SITE ACTIVITIES AND MEASURES TO BE USED TO CONTROL EROSION AND SEDIMENT MOVEMENT FOR EACH STEP OF THE WORK.

CONTRACTOR'S RESPONSIBILITIES

THE CONTRACTOR SHALL ENSURE THAT ALL WORKERS, INCLUDING SUB-CONTRACTOR, IN THE WORKING ARE ARE AWARE OF THE IMPORTANCE OF THE EROSION AND SEDIMENT CONTROL MEASURES AND INFORMED OF THE CONSEQUENCES OF THE FAILURE TO COMPLY WITH THE REQUIREMENTS OF ALL REGULATORY AGENCIES.

THE CONTRACTOR SHALL PERIODICALLY, AND WHEN REQUESTED BY THE CONTRACT ADMINISTRATOR, CLEAN OUT ACCUMULATED SEDIMENT DEPOSITS AS REQUIRED AT THE SEDIMENT CONTROL DEVICES, INCLUDING THOSE DEPOSITS THAT MAY ORIGINATE FROM OUTSIDE THE CONSTRUCTION AREA. ACCUMULATED SEDIMENT SHALL BE REMOVED IN SUCH A MANNER THAT PREVENTS THE DEPOSITION OF THIS MATERIAL INTO THE SEWER WATERCOURSE AND AVOIDS DAMAGE TO CONTROL MEASURES. THE SEDIMENT SHALL BE REMOVED FROM THE SITE AT THE CONTRACTOR'S EXPENSE AND MANAGED IN COMPLIANCE WITH REQUIREMENTS FRO EXCESS EARTH MATERIAL, AS SPECIFIED ELSEWHERE IN THE CONTRACT.

THE CONTRACTOR SHALL IMMEDIATELY REPORT TO THE CONTRACT ADMINISTRATOR ANY ACCIDENTAL DISCHARGES OF SEDIMENT MATERIAL INTO EITHER THE WATERCOURSE OR THE STORM SEWER SYSTEM. FAILURE TO REPORT WILL BE CONSTITUTE A BRACH OF THIS SPECIFICATION AND THE CONTRACTOR MAY ALSO BE SUBJECT TO THE PENALTIES IMPOSED BY THE APPLICABLE REGULATORY AGENCY. APPROPRIATE RESPONSE MEASURES, INCLUDING ANY REPAIRS TO EXISTING CONTROL MEASURES OR THE IMPLEMENTATION OF ADDITIONAL CONTROL MEASURES, SHALL BE CARRIED OUT BY THE CONTRACTOR WITHOUT DELAY.

THE SEDIMENT CONTROL MEASURES SHALL ONLY BE REMOVED WHEN, IN THE OPINION OF THE CONTRACT ADMINISTRATOR, THE MEASURE OR MEASURES, IS NO LONGER REQUIRED. NO CONTROL MEASURE MAY BE PERMANENTLY REMOVED WITHOUT PRIOR AUTHORIZATION FROM THE CONTRACT ADMINISTRATOR. ALL SEDIMENT AND EROSION CONTROL MEASURES SHALL BE REMOVED IN A MANNER THAT AVOIDS THE ENTRY OF ANY EQUIPMENT, OTHER THAN HAND-HELD EQUIPMENT, INTO ANY WATERCOURSE, AND PREVENTS THE RELEASE OF ANY SEDIMENT OR DEBRIS INTO ANY SEWER OR WATERCOURSE WITHIN OR DOWNSTREAM OF THE WORKING AREA. ALL ACCUMULATED SEDIMENT SHALL BE REMOVED FROM THE WORKING AREA AT THE CONTRACTOR'S EXPENSE AND MANAGED IN COMPLIANCE WITH THE REQUIREMENTS FOR EXCESS EARTH MATERIAL

WHERE, IN THE OPINION OF EITHER THE CONTRACT ADMINISTRATOR OR A REGULATORY AGENCY, ANY OF THE TERMS SPECIFIED HEREIN HAVE NOT BEEN COMPLIED WITH OR PERFORMED IN A SUITABLE MANNER, OR TAT ALL, THE CONTRACTOR ADMINISTRATOR OR A REGULATORY AGENCY HAS THE RIGHT TO IMMEDIATELY WITHDRAW ITS PERMISSION TO CONTINUE THE WORK BUT MAY RENEW ITS PERMISSION UPON BEING SATISFIED THAT THE DEFAULTS OR DEFICIENCIES IN THE PERFORMANCE OF THIS SPECIFICATION BY THE CONTRACTOR HAVE BEEN REMEDIED.

SPILL CONTROL NOTES

1. ALL CONSTRUCTION EQUIPMENT SHALL BE RE-FUELED, MAINTAINED, AND STORED NO LESS THAN 30 METERS FROM WATERCOURSE, STEAMS, CREEKS, WOODLOTS, AND ANY ENVIRONMENTALLY SENSITIVE AREAS, OR AS OTHERWISE SPECIFIED.
2. THE CONTRACTOR MUST IMPLEMENT ALL NECESSARY MEASURES IN ORDER TO PREVENT LEAKS, DISCHARGES OR SPILLS OF POLLUTANTS, DELETERIOUS MATERIALS, OR OTHER SUCH MATERIALS OR SUBSTANCES WHICH WOULD OR COULD CAUSE AN ADVERSE IMPACT TO THE NATURAL ENVIRONMENT.
3. IN THE EVENT OF A LEAK, DISCHARGE OR SPILL OF POLLUTANT, DELETERIOUS MATERIAL OR OTHER SUCH MATERIAL OR SUBSTANCE WHICH WOULD OR COULD CAUSE AN ADVERSE IMPACT TO THE NATURAL ENVIRONMENT, THE CONTRACTOR SHALL:
   - 3.1. IMMEDIATELY NOTIFY APPROPRIATE FEDERAL, PROVINCIAL, AND LOCAL GOVERNMENT MINISTRIES, DEPARTMENTS, AGENCIES, AND AUTHORITIES OF THE INCIDENT IN ACCORDANCE WITH ALL CURRENT LAWS, LEGISLATION, ACTS, BY-LAWS, PERMITS, APPROVALS, ETC.
   - 3.2. TAKE IMMEDIATE MEASURES TO CONTAIN THE MATERIAL OR SUBSTANCE, AND TO TAKE SUCH MEASURES TO MITIGATE AGAINST ADVERSE IMPACTS TO THE NATURAL ENVIRONMENT.
   - 3.3. RESTORE THE AFFECTED AREA TO THE ORIGINAL CONDITION OR BETTER TO THE SATISFACTION OF THE AUTHORITIES HAVING JURISDICTION.

MUD MAT NOTES

1. THE GRANULAR MATERIAL WILL REQUIRE PERIODIC REPLACEMENT AS IT BECOMES CONTAMINATED BY VEHICLE TRAFFIC.
2. SEDIMENT SHALL BE CLEANED FROM PUBLIC ROADS AT THE END OF EACH DAY.
3. SEDIMENT SHALL BE REMOVED FROM PUBLIC ROADS BY SHOVELING OR SWEEPING AND DISPOSED OR PROPERLY IN A CONTROLLED SEDIMENT DISPOSAL AREA.

SITE GRADING NOTES

1. PRIOR TO THE COMMENCEMENT OF THE SITE GRADING WORKS, ALL SILTATION CONTROL DEVICES SHALL BE INSTALLED AND OPERATIONAL PER EROSION CONTROL PLAN.
2. ALL GRANULAR AND PAVEMENT FOR ROADS/PARKING AREAS SHALL BE CONSTRUCTED IN ACCORDANCE WITH GEOTECHNICAL ENGINEER'S RECOMMENDATIONS.
3. ALL TOPSOIL AND ORGANIC MATERIAL SHALL BE STRIPPED WITHIN THE ROAD AND PARKING AREAS ALLOWANCE PRIOR TO THE COMMENCEMENT OF CONSTRUCTION.
4. CONCRETE CURB SHALL BE IN ACCORDANCE WITH THE CITY OF OTTAWA STD. SC1.1 OR OPSD 600.110. PROVISION SHALL BE MADE OR CURB DEPRESSIONS AS INDICATED ON ARCHITECTURAL SITE PLAN. CONCRETE SIDEWALK SHALL BE IN ACCORDANCE WITH CITY OF OTTAWA STD SC1.4. ALL CURBS, CONCRETE ISLANDS, AND SIDEWALKS SHOWN O THIS DRAWING ARE TO BR PRICED IN SITE WORKS PORTION OF THE CONTRACT.
5. PAVEMENT REINSTATEMENT FOR SERVICE AND UTILITY CUTS SHALL BE IN ACCORDANCE WITH THE CITY OF OTTAWA STD. R10 AND OPSD 509.010 AND OPSS 310.
6. GRANULAR 'A' SHALL BE PLACED TO A MINIMUM THICKNESS OF 300MM AROUND ALL STRUCTURES WITHIN THE PAVEMENT AREA.
7. SUB-EXCAVATE SOFT AREAS AND FILL WITH GRANULAR 'B' COMPACTED IN MAXIMUM 300MM LIFTS.
8. ALL WORK ON THE MUNICIPAL RIGHT OF WAY AND EASEMENTS TO BE INSPECTED BY THE MUNICIPALITY PRIOR BACKFILLING.
9. CONTRACTOR TO OBTAIN A ROAD OCCUPANCY PERMIT 48 HOURS PRIOR TO COMMENCING ANY WORK WITHIN THE MUNICIPAL ROAD ALLOWANCE, IF REQUIRED BY THE MUNICIPALITY.
10. ALL PAVEMENT MARKING FEATURES AND SITE SIGNAGE SHALL BE PLACED PER ARCHITECTURAL SITE PLAN. LINE PAINTING AND DIRECTIONAL SYMBOLS SHALL BE APPLIED WITH A MINIMUM OF TWO COATS OF ORGANIC SOLVENT PAINT.
11. REFER TO ARCHITECTURAL SITE PLAN FOR DIMENSIONS AND SITE DETAILS.
12. STEP JOINTS ARE TO BE USED WHERE PROPOSED ASPHALT MEETS EXISTING ASPHALT. ALL JOINTS MUST BE SEALED.
13. SIDEWALKS TO BE 13MM & BEVELED AT 2:1 OR 6MM WITH NO BEVEL REQUIRED BELOW THE FINISHED FLOOR SLAB ELEVATION AT ENTRANCES REQUIRED TO BE BARRIER-FREE, UNLESS OTHERWISE NOTED. ALL IN ACCORDANCE WITH OBC 3.8.1.3 & OTTAWA ACCESSIBILITY DESIGN STANDARDS.
14. WHERE APPLICABLE THE CONTRACTOR IS TO SUBMIT SHOP DRAWINGS TO THE ENGINEER FOR APPROVAL PRIOR TO CONSTRUCTION. SHOP DRAWINGS MUST BE SITE SPECIFIC, SIGNED AND SEALED BY A LICENSED STRUCTURAL ENGINEER. THE CONTRACTOR WILL ALSO BE REQUIRED TO SUPPLY AND GEOTECHNICAL CERTIFICATION OF THE AS-CONSTRUCTED RETAINING WALL TO THE ENGINEER PRIOR TO FINAL ACCEPTANCE.

ROADWORK SPECIFICATIONS

15. ROADWORK TO BE COMPLETED IN ACCORDANCE WITH THE GEOTECHNICAL REPORT.
16. ALL TOPSOIL AND ORGANIC MATERIAL SHALL BE STRIPPED WITHIN THE ROAD ALLOWANCE PRIOR TO THE COMMENCEMENT OF CONSTRUCTION AND STOCK PILLED ON SITE AS DIRECTED BY NATIONAL MUNICIPALITY.
17. THE SUBGRADE SHALL BE CROWNED AND SLOPED AT LEAST 2% AND PROOF ROLLED WITH HEAVY ROLLERS.
18. SUB-EXCAVATE SOFT AREAS AND FILL WITH GRANULAR 'A', TYPE II COMPACTED IN MAXIMUM 300MM LIFTS.
19. ALL GRANULAR FOR ROADS SHALL BE COMPACTED TO MINIMUM OF 100% STANDARD PROCTOR DENSITY MAXIMUM DRY DENSITY (SPMDD).
20. CONCRETE RAMP C/W TACTILE WALKING SURFACE INDICATORS COMPONENT AS PER OPSD 310.039. TACTILE WALKING SURFACE INDICATORS TO BE INSTALLED AT ALL RAMPS. MATERIAL TO BE POLYMER COMPOSITE, COLOR GREY.

SANITARY, FOUNDATION DRAIN, STORM SEWER AND WATERMAIN NOTES

GENERAL

1. LASER ALIGNMENT CONTROL TO BE UTILIZED ON ALL SEWER INSTALLATIONS.
2. CLAY SEALS TO BE INSTALLED AS PER CITY STANDARD DRAWING S8. THE SEALS SHOULD BE AT LEAST 1.5M LONG (IN THE TRENCH DIRECTION) AND SHOULD EXTEND FROM TRENCH WALL TO TRENCH WALL. THE SEALS SHOULD EXTEND FROM THE FROST LINE AND FULLY PENETRATE THE BEDDING, SUB-BEDDING, AND COVER MATERIAL. THE BARRIERS SHOULD CONSIST OF RELATIVELY DRY AND COMPATIBLE BROWN SILTY CLAY PLACED IN MAXIMUM 225MM LIFTS AND COMPACTED TO A MINIMUM OF 95% SPMDD. THE CLAY SEALS SHOULD BE PLACED AT THE SITE BOUNDARIES AND AT 60M INTERVALS IN THE SERVICE TRENCHES.
3. SERVICES TO BUILDING TO BE TERMINATED 1.0M FROM THE OUTSIDE FACE OF BUILDING UNLESS OTHERWISE NOTED.
4. ALL MAINTENANCE STRUCTURE AND CATCH BASIN EXCAVATIONS TO BE BACKFILLED WITH GRANULAR MATERIAL COMPACTED TO 98% STANDARD PROCTOR DENSITY. A MINIMUM OF 300MM AROUND STRUCTURES.
5. "MODULO" OR APPROVED PRE-CAST MAINTENANCE STRUCTURE AND CATCH BASIN ADJUSTERS TO BE USED IN LIEU OF BRICKING. PARGE ADJUSTING UNITS ON THE OUTSIDE ONLY.
6. SAFETY PLATFORMS SHALL BE PER OPSD 404.02.
7. DROP STRUCTURES SHALL BE IN ACCORDANCE WITH OPSD 1003.01, IF APPLICABLE.
8. THE CONTRACTOR IS TO PROVIDE CCTV CAMERA INSPECTIONS OF ALL SEWERS, INCLUDING PICTORIAL REPORT, ONE (1) CD COPY AND TWO (2) VIDEO RECORDING IN A FORMAT ACCEPTABLE TO ENGINEER. ALL SEWER ARE TO BE FLUSHED PRIOR TO CAMERA INSPECTION. ASPHALT WEAR COURSE SHALL NOT BE PLACED UNTIL THE VIDEO INSPECTION OF SEWERS AND NECESSARY REPAIRS HAVE BEEN COMPLETED TO THE SATISFACTION OF THE ENGINEER.
9. CONTRACTOR SHALL PERFORM LEAKAGE TESTING, IN THE PRESENCE OF THE CONSULTANT, FOR SANITARY SEWERS IN ACCORDANCE WITH OPSS 407. CONTRACTOR SHALL PERFORM VIDEO INSPECTION OF ALL SEWERS. A COPY OF THE VIDEO AND INSPECTION REPORT SHALL BE SUBMITTED TO THE CONSULTANT FOR REVIEW AND APPROVAL PRIOR TO PLACEMENT OF WEAR COURSE ASPHALT.

SANITARY

10. ALL SANITARY SEWER INSTALLATION SHALL CONFORM TO THE LATEST REVISIONS OF THE CITY OF OTTAWA AND THE ONTARIO PROVINCIAL STANDARD DRAWINGS (OPSD). AND SPECIFICATIONS (OPSS).
11. ALL SANITARY GRAVITY SEWER SHALL BE PVC SDR 35, IPEX 'RING-TITE' (OR APPROVED EQUIVALENT) PER CSA STANDARD B182.2 OR LATEST AMENDMENT, UNLESS SPECIFIED OTHERWISE.
12. EXISTING MAINTENANCE STRUCTURES TO BE RE-BENCHED WHERE A NEW CONNECTION IS MADE.
13. SANITARY GRAVITY SEWER TRENCH AND BEDDING SHALL BE PER CITY OF OTTAWA STD. S6 AND S7 CLASS 'B' BEDDING, UNLESS SPECIFIED OTHERWISE.
14. SANITARY MAINTENANCE STRUCTURE FRAME AND COVERS SHALL BE PER CITY OF OTTAWA STD. S24 AND S25.
15. SANITARY MAINTENANCE STRUCTURES SHALL BE BENCHED PER OPSD 701.021.
16. 100MM THICK HIGH-DENSITY GRADE 'A' POLYSTYRENE INSULATION TO BE INSTALLED IN ACCORDANCE WITH CITY STD W22 WHERE INDICATED ON DRAWING SSP-1.

STORM

17. ALL REINFORCED CONCRETE STORM SEWER PIPE SHALL BE IN ACCORDANCE WITH CSA A257.2, OR LATEST AMENDMENT. ALL NON-REINFORCED CONCRETE STORM SEWER PIPE SHALL BE IN ACCORDANCE WITH CSA A257.1, OR LATEST AMENDMENT. PIPE SHALL BE JOINED WITH STD. RUBBER GASKETS AS PER CSA A257.3, OR LATEST AMENDMENT.
18. ALL STORM SEWER TRENCH AND BEDDING SHALL BE IN ACCORDANCE WITH THE CITY OF OTTAWA STD. S6 AND S7 CLASS 'B' UNLESS OTHERWISE SPECIFIED. BEDDING AND COVER MATERIAL SHALL BE SPECIFIED BY PROJECT GEOTECHNICAL ENGINEER.
19. ALL PVC STORM SEWERS ARE TO BE SDR 35 APPROVED PER C.S.A. B182.2 OR LATEST AMENDMENT, UNLESS OTHERWISE SPECIFIED.
20. CATCH BASIN SHALL BE IN ACCORDANCE WITH OPSD 705.010.
21. CATCH BASIN LEADS SHALL BE IN 200MM DIA. AT 1% SLOPE (MIN) UNLESS SPECIFIED OTHERWISE.
22. ALL CATCH BASINS SHALL HAVE 600MM SUMPS, UNLESS SPECIFIED OTHERWISE.
23. ALL CATCH BASIN LEAD INVERTS TO BE 1.5M BELOW FINISHED GRADE UNLESS SPECIFIED OTHERWISE.
24. THE STORM SEWER CLASSES HAVE BEEN DESIGNED BASED ON BEDDING CONDITIONS SPECIFIED ABOVE. WHERE THE SPECIFIED TRENCH WIDTH IS EXCEEDED , THE CONTRACTOR IS REQUIRED TO PROVIDE AND SHALL BE RESPONSIBLE FOR EXTRA TEMPORARY AND/OR PERMANENT REPAIRS MADE NECESSARY BY THE WIDENED TRENCH.
25. ALL ROAD AND PARKING LOT CATCH BASINS TO BE INSTALLED WITH ORTHOGONALLY PLACED SUBDRAINS IN ACCORDANCE WITH DETAIL. PERFORATED SUBDRAIN FOR ROAD AND PARKING LOT CATCH BASIN SHALL BE INSTALLED PER CITY STD R1 UNLESS OTHERWISE NOTED.
26. PERFORATED SUBDRAIN FOR REAR YARD AND LANDSCAPING APPLICATIONS SHALL BE INSTALLED PER CITY STD S29, S30 AND S31, WHERE APPLICABLE.
27. RIP-RAP TREATMENT SEWER AND CULVERT OUTLETS PER OPSD 810.010.
28. ALL STORM SEWER/ CULVERTS TO BE INSTALLED WITH FROST TREATMENT PER OPSD 803.031 WHERE APPLICABLE.
29. ALL STORM MANHOLES WITH PIPE LESS THAN 900MM IN DIAMETER SHALL BE CONSTRUCTED WITH A 300MM SUMP AS PER SDG, CLAUSE 6.2.6.

WATERMAIN

30. ALL WATERMAIN INSTALLATION SHALL CONFORM TO THE LATEST REVISIONS OF THE CITY OF OTTAWA AND THE ONTARIO PROVINCIAL STANDARD DRAWINGS (OPSD) AND SPECIFICATIONS (OPSS).
31. ALL PVC WATERMAINS SHALL BE AWWA C-900 CLASS 150, SDR 18 OR APPROVED EQUIVALENT.
32. ALL WATER SERVICES LESS THAN OR EQUAL TO 50MM IN DIAMETER TO BE TYPE 'K' COPPER.
33. WATERMAIN TRENCH AND BEDDING SHALL BE IN ACCORDANCE WITH CITY OF OTTAWA STANDARD W17. UNLESS SPECIFIED OTHERWISE. BEDDING AND COVER MATERIAL SHALL BE SPECIFIED BY THE PROJECT GEOTECHNICAL ENGINEER.
34. ALL PVC WATERMAINS, SHALL BE INSTALLED WITH A 10 GAUGE STRANDED COPPER TWU OR RWU TRACER WIRE IN ACCORDANCE WITH CITY OF OTTAWA STD. W.36.
35. CATHODIC PROTECTION IS REQUIRED ON ALL METALLIC FITTINGS PER CITY OF OTTAWA STD.25.5 AND W25.6.
36. VALVE BOXES SHALL BE INSTALLED PER CITY OF OTTAWA STD W24.
37. WATERMAIN IN FILL AREAS TO BE INSTALLED WITH RESTRAINED JOINTS PER CITY OF OTTAWA STD.25.5 AND W25.6.
38. THRUST BLOCKING OF WATERMAINS TO BE INSTALLED PER CITY OF OTTAWA STD. W25.3 AND W25.4.
39. THE CONTRACTOR SHALL PROVIDE ALL TEMPORARY CAPS, PLUGS, BLOW-OFFS, AND NOZZLES REQUIRED FOR TESTING AND DISINFECTION OF THE WATERMAIN.
40. WATERMAIN CROSSING OVER AND BELOW SEWERS SHALL BE IN ACCORDANCE WITH THE CITY OF OTTAWA STD. W25,2 AND W25, RESPECTIVELY.
41. WATER SERVICES ARE TO BE INSULATED PER CITY STD. W23 WHERE SEPARATION BETWEEN SERVICES AND MAINTENANCE HOLES ARE LESS THAN 2.4M.
42. THE MINIMUM VERTICAL CLEARANCE BETWEEN WATERMAIN AND SEWER/UTILITY IS 0.5M PER MOE GUIDELINES. FOR CROSSING UNDER SEWERS, ADEQUATE STRUCTURAL SUPPORT FOR THE SEWER IS REQUIRED TO PREVENT EXCESSIVE DEFLECTION OF JOINTS AND SETTLING. THE LENGTH OF WATER PIPE SHALL BE CENTERED AT THE POINT OF CROSSING TO ENSURE THAT THE JOINTS WILL BE EQUIDISTANT AND AS FAR AS POSSIBLE FROM THE SEWER.
43. ALL WATERMAINS SHALL HAVE A MINIMUM COVER OR 2.4M, OTHERWISE THERMAL INSULATION IS REQUIRED AS PER STD DWG W22.
44. GENERAL WATER PLANT TO UTILITY CLEARANCE AS PER STD DWG R20.
45. FIRE HYDRANT INSTALLATION AS PER STD DWG W19, ALL BOTTOM OF HYDRANT FLANGE ELEVATIONS TO BE INSTALLED 0.10M ABOVE PROPOSED FINISHED GRADE AT HYDRANT; FIRE HYDRANT LOCATION AS PER STD DWG W18.
46. BUILDING SERVICE TO BE CAPPED 1.0M OFF THE FACE OF THE BUILDING UNLESS OTHERWISE NOTED AND MUST BE RESTRAINED A MINIMUM OF 12M BACK FROM STUB.
47. ALL WATERMAINS SHALL BE HYDROSTATICALLY TESTED IN ACCORDANCE WITH THE CITY OF OTTAWA AND ONTARIO GUIDELINES UNLESS OTHERWISE DIRECTED. PROVISIONS FOR FLUSHING WATER LINE PRIOR TO TESTING, ETC. MUST BE PROVIDED.
48. ALL WATERMAINS SHALL BE BACTERIOLOGICALLY TESTED IN ACCORDANCE WITH THE CITY OF OTTAWA AND ONTARIO GUIDELINES. ALL CHLORINATED WATER TO BE DISCHARGED AND PRETREATED TO ACCEPTABLE LEVELS PRIOR TO DISCHARGE. ALL DISCHARGED WATER MUST BE CONTROLLED AND TREATED SO AS NOT TO ADVERSELY EFFECT ENVIRONMENT. IT IS RESPONSIBILITY OF THE CONTRACTOR TO ENSURE THAT ALL MUNICIPAL AND/OR PROVINCIAL REQUIREMENTS ARE FOLLOWED.
49. ALL WATERMAIN STUBS SHALL BE TERMINATED WITH A PLUG AND 50MM BLOW OFF UNLESS OTHERWISE NOTED.

USE AND INTERPRETATION OF DRAWINGS

GENERAL CONDITIONS OF THE CONTRACT FOR CONSTRUCTION ARE PART OF THE CONTRACT DOCUMENTS AND DESCRIBE USE AND INTENT OF THE DRAWING. THE CONTRACT DOCUMENTS INCLUDE NOT ONLY THE DRAWINGS, BUT ALSO THE OWNER-CONTRACTOR AGREEMENTS, CONDITIONS OF THE CONTRACT, THE SPECIFICATIONS, ADDENDA, AND MODIFICATIONS ISSUED AFTER EXECUTION OF THE CONTRACT. THESE CONTRACT DOCUMENTS ARE COMPLEMENTARY, AND WHAT IS REQUIRED BY ANY ONE SHALL BE BINDING AS IF REQUIRED BY ALL. WORK NOT COMPLETELY DELINEATED HEREON SHALL BE CONSTRUCTED OF THE SAME MATERIALS AND DETAILED SIMILARLY AS WORK SHOWN MORE COMPLETELY ELSEWHERE IN THE CONTRACT DOCUMENTS.

BY USE OF THE DRAWINGS FOR CONSTRUCTION OF THE PROJECT, THE OWNER CONFIRMS THAT HE HAS REVIEWED AND APPROVED THE DRAWINGS. THE CONTRACTOR CONFIRMS THAT HE HAS VISITED THE SITE, FAMILIARIZED HIMSELF WITH THE LOCAL CONDITIONS, VERIFIED FIELD DIMENSIONS AND CORRELATED HIS OBSERVATIONS WITH THE REQUIREMENTS OF THE CONTRACT DOCUMENTS.

AS INSTRUMENTS OF SERVICE, ALL DRAWINGS, SPECIFICATIONS, CAD FILES OR OTHER ELECTRONIC MEDIA AND COPIED THERE OF FURNISHED BY THE ENGINEER ARE HIS PROPERTY. THEY ARE TO BE USED ONLY FOR THIS PROJECT AND ARE NOT TO BE USED ON ANY OTHER PROJECT, INCLUDING REPEATS OF THE PROJECT. CHANGES TO THE DRAWINGS MAY ONLY BE MADE BY THE ENGINEER.

UNLESS THE REVISION TITLE IS "ISSUED FOR CONSTRUCTION", THESE DRAWINGS SHALL BE CONSIDERED PRELIMINARY AND SHALL NOT BE USED AS A CONSTRUCTION DOCUMENT.

THESE DRAWINGS ILLUSTRATES THE WORK TO BE DONE. THE ENGINEER IS NOT RESPONSIBLE FOR THE MEANS, METHODS, TECHNIQUES, SEQUENCES, AND PROCEDURES USED TO DO THE WORK, OR THE SAFETY ASPECTS OF CONSTRUCTION, AND NOTHING ON THESE DRAWINGS EXPRESSED OR IMPLIED CHANGES THIS CONDITION. CONTRACTOR SHALL DETERMINE ALL CONDITIONS AT THE SITE AND SHALL BE RESPONSIBLE FOR KNOWING HOW THEY AFFECT THE WORK. SUBMITTAL OF A BID TO PERFORM THIS WORK IS ACKNOWLEDGEMENT OF THE RESPONSIBILITIES, AND THAT THEY HAVE BEEN FULLY CONSIDERED IN PLANNING OF THE WORK, AND THE BID PRICE. NO CLAIMS FOR EXTRA CHARGES DUE TO THESE CONDITIONS WILL BE FORTHCOMING.

UNAUTHORIZED CHANGES:

IN THE EVENT THE CLIENT, THE CLIENT'S CONTRACTORS OR SUBCONTRACTORS, OR ANYONE FOR WHOM THE CLIENT IS

LEGEND:

	EXISTING PROPERTY LINE TO REMAIN
	PROPOSED CURB
DC	PROPOSED DEPRESSED CURB
	PROPOSED TERRACING (3:1 MIN.)
	PROPOSED SILT FENCE AS PER OPSD 219.110
	PROPOSED LIMITS OF CONSTRUCTION
	PROPOSED DOOR ENTRANCE/EXIT
	PROPOSED GRASS AREA (100mm TOP SOIL & SOD)
	PROPOSED UNIT PAVERS
	PROPOSED CONCRETE FEATURES
	PROPOSED HEAVY DUTY ASPHALT
	PROPOSED LIGHT DUTY ASPHALT
	PROPOSED STONE DUST FEATURES
	PROPOSED DRY CREEK
	PROPOSED BRIDGE
	PROPOSED BENCH
×50.00	PROPOSED ELEVATION
×50.00HP	PROPOSED HIGH POINT ELEVATION
×50.00S	PROPOSED SWALE ELEVATION
×50.00BC	PROPOSED BOTTOM OF CURB / ASPHALT ELEVATION
×50.00TC	PROPOSED TOP OF CURB ELEVATION
×50.00BW	PROPOSED EXPOSED BOTTOM OF RETAINING WALL
×50.00TW	PROPOSED TOP OF RETAINING WALL
×50.00EX	MATCH INTO EXISTING ELEVATION
×70.19	EXISTING ELEVATION
	PROPOSED OVERLAND MAJOR FLOW ROUTE
SUB —— SUB	PROPOSED 100mmØ PERFORATED SUBDRAIN
STM —— STM	PROPOSED STORM SEWER
SAN —— SAN	PROPOSED SANITARY SEWER
WTR —— WTR	PROPOSED WATERMAIN
STM —— STM	EXISTING STORM SEWER
SAN —— SAN	EXISTING SANITARY SEWER
WTR —— WTR	EXISTING WATERMAIN
	PROPOSED ROOF SCUPPER LOCATION
	EXISTING MANHOLE
	EXISTING CATCHBASIN
	PROPOSED CATCHBASIN-MANHOLE/CATCHBASIN
	PROPOSED MANHOLE
	PROPOSED CURB STOP
	PROPOSED PIPE INSULATION
	PROPOSED 100 YEAR HIGH WATER LEVEL
	STORM WATERSHED EXTENT

CA-XX / CONTROLLED / AREA / RUNOFF — CATCHMENT NAME; RUNOFF COEFFICIENT; AREA IN HECTARES

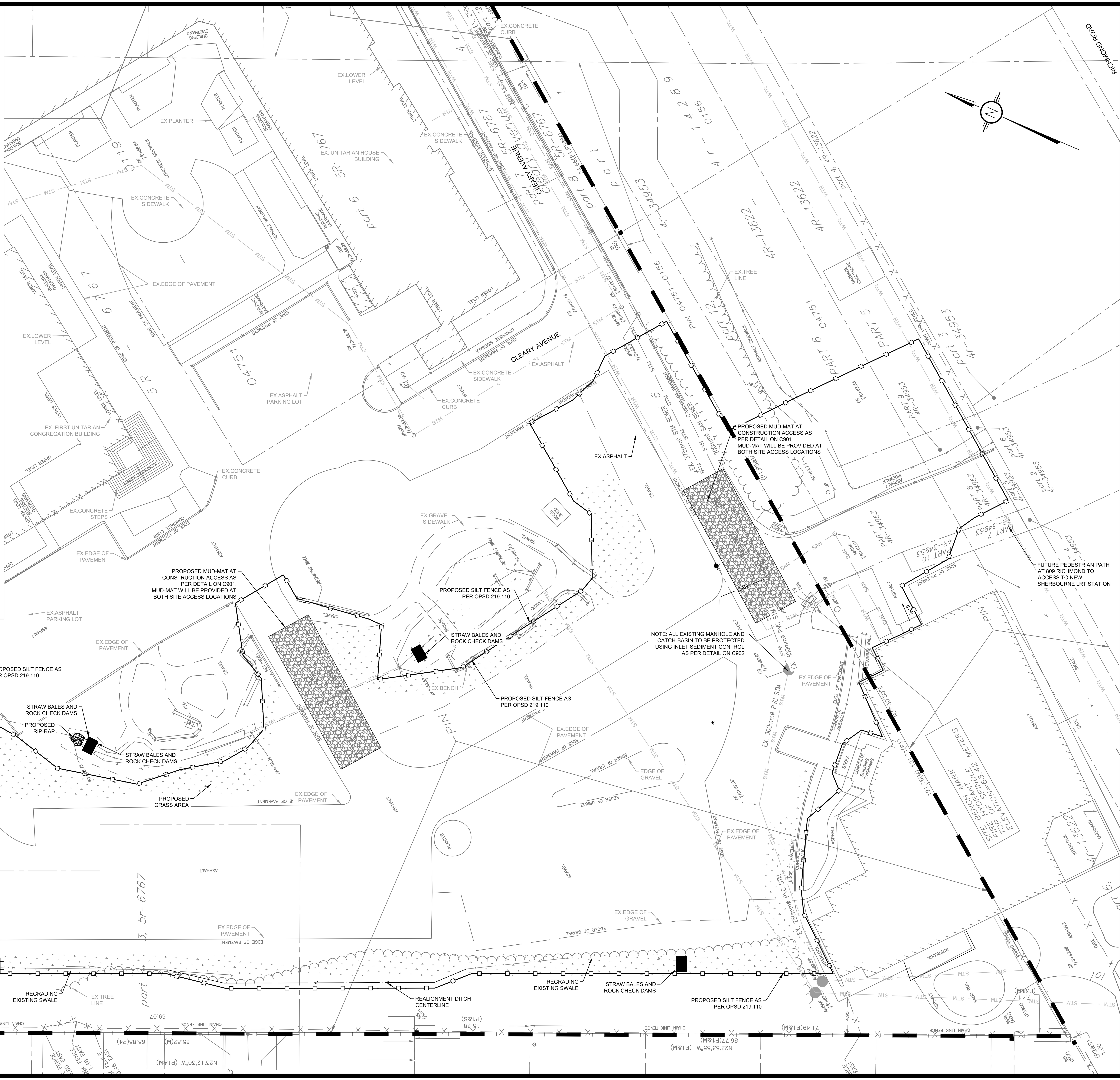

USE AND INTERPRETATION OF DRAWINGS

GENERAL CONDITIONS OF THE CONTRACT FOR CONSTRUCTION ARE PART OF THE CONTRACT DOCUMENTS AND DESCRIBE USE AND INTENT OF THE DRAWING. THE CONTRACT DOCUMENTS INCLUDE NOT ONLY THE DRAWINGS, BUT ALSO THE OWNER-CONTRACTOR AGREEMENTS, CONDITIONS OF THE CONTRACT, THE SPECIFICATIONS, ADDENDA, AND MODIFICATIONS ISSUED AFTER EXECUTION OF THE CONTRACT. THESE CONTRACT DOCUMENTS ARE COMPLEMENTARY, AND WHAT IS REQUIRED BY ANY ONE SHALL BE BINDING AS IF REQUIRED BY ALL. WORK NOT COMPLETELY DELINEATED HEREON SHALL BE CONSTRUCTED OF THE SAME MATERIALS AND DETAILED SIMILARLY AS WORK SHOWN MORE COMPLETELY ELSEWHERE IN THE CONTRACT DOCUMENTS.

BY USE OF THE DRAWINGS FOR CONSTRUCTION OF THE PROJECT, THE OWNER CONFIRMS THAT HE HAS REVIEWED AND APPROVED THE DRAWINGS. THE CONTRACTOR CONFIRMS THAT HE HAS VISITED THE SITE, FAMILIARIZED HIMSELF WITH THE LOCAL CONDITIONS, VERIFIED FIELD DIMENSIONS AND CORRELATED HIS OBSERVATIONS WITH THE REQUIREMENTS OF THE CONTRACT DOCUMENTS.

AS INSTRUMENTS OF SERVICE, ALL DRAWINGS, SPECIFICATIONS, CAD FILES OR OTHER ELECTRONIC MEDIA AND COPIED THERE OF FURNISHED BY THE ENGINEER ARE HIS PROPERTY. THEY ARE TO BE USED ONLY FOR THIS PROJECT AND ARE NOT TO BE USED ON ANY OTHER PROJECT, INCLUDING REPEATS OF THE PROJECT. CHANGES TO THE DRAWINGS MAY ONLY BE MADE BY THE ENGINEER.

UNLESS THE REVISION TITLE IS "ISSUED FOR CONSTRUCTION", THESE DRAWINGS SHALL BE CONSIDERED PRELIMINARY AND SHALL NOT BE USED AS A CONSTRUCTION DOCUMENT.

THESE DRAWINGS ILLUSTRATES THE WORK TO BE DONE. THE ENGINEER IS NOT RESPONSIBLE FOR THE MEANS, METHODS, TECHNIQUES, SEQUENCES, AND PROCEDURES USED TO DO THE WORK, OR THE SAFETY ASPECTS OF CONSTRUCTION, AND NOTHING ON THESE DRAWINGS EXPRESSED OR IMPLIED CHANGES THIS CONDITION. CONTRACTOR SHALL DETERMINE ALL CONDITIONS AT THE SITE AND SHALL BE RESPONSIBLE FOR KNOWING HOW THEY AFFECT THE WORK. SUBMITTAL OF A BID TO PERFORM THIS WORK IS ACKNOWLEDGEMENT OF THE RESPONSIBILITIES, AND THAT THEY HAVE BEEN FULLY CONSIDERED IN PLANNING OF THE WORK, AND THE BID PRICE. NO CLAIMS FOR EXTRA CHARGES DUE TO THESE CONDITIONS WILL BE FORTHCOMING.

UNAUTHORIZED CHANGES:

IN THE EVENT THE CLIENT, THE CLIENT'S CONTRACTORS OR SUBCONTRACTORS, OR ANYONE FOR WHOM THE CLIENT IS LEGALLY LIABLE MAKES OR PERMITS TO BE MADE ANY CHANGES TO ANY REPORTS, PLANS, SPECIFICATIONS OR OTHER CONSTRUCTION DOCUMENTS PREPARED BY LRL ASSOCIATES LTD. (LRL) WITHOUT OBTAINING LRL'S PRIOR WRITTEN CONSENT, THE CLIENT SHALL ASSUME FULL RESPONSIBILITY FOR THE RESULTS OF SUCH CHANGES. THEREFORE THE CLIENT AGREES TO WAIVE ANY CLAIM AGAINST LRL AND TO RELEASE LRL FROM ANY LIABILITY ARISING DIRECTLY OR INDIRECTLY FROM SUCH UNAUTHORIZED CHANGES.

IN ADDITION, THE CLIENT AGREES, TO THE FULLEST EXTENT PERMITTED BY LAW, TO INDEMNIFY AND HOLD HARMLESS LRL FROM ANY DAMAGES, LIABILITIES OR COST, INCLUDING REASONABLE ATTORNEY'S FEES AND COST OF DEFENSE, ARISING FROM SUCH CHANGES.

IN ADDITION, THE CLIENT AGREES TO INCLUDE IN ANY CONTRACTS FOR CONSTRUCTION APPROPRIATE LANGUAGE THAT PROHIBITS THE CONTRACTOR OR ANY SUBCONTRACTORS OF ANY TIER FROM MAKING ANY CHANGES OR MODIFICATIONS TO LRL'S CONSTRUCTION DOCUMENTS WITHOUT THE PRIOR WRITTEN APPROVAL OF LRL AND THAT FURTHER REQUIRES THE CONTRACTOR TO INDEMNIFY BOTH LRL AND THE CLIENT FROM ANY LIABILITY OR COST ARISING FROM SUCH CHANGES MADE WITHOUT SUCH PROPER AUTHORIZATION.

GENERAL NOTES:

EXISTING SERVICES AND UTILITIES SHOWN ON THESE DRAWINGS ARE TAKEN FROM THE BEST AVAILABLE RECORDS, BUT MAY NOT BE COMPLETE OR TO DATE. CONTRACTOR SHALL VERIFY IN FIELD FOR LOCATION AND ELEVATION OF PIPES AND CHECK WITH THE UTILITY COMPANIES BEFORE DIGGING OR PERFORMING WORK.

CONTRACTOR IS ADVISED TO COLLECT INFORMATION ON SOIL CONDITIONS BEFORE START OF CONSTRUCTION.

THE ENGINEER WAIVES ANY AND ALL RESPONSIBILITY AND LIABILITY FOR PROBLEMS WHICH ARISE FROM FAILURE TO FOLLOW THESE PLANS, SPECIFICATIONS AND THE DESIGN INTENT THEY CONVEY, OR FOR PROBLEMS WHICH ARISE FROM OTHERS' FAILURE TO OBTAIN AND/OR FOLLOW THE ENGINEER'S GUIDANCE WITH RESPECT TO ANY ERRORS, OMISSIONS, INCONSISTENCIES AMBIGUITIES OR CONFLICTS WHICH ARE ALLEGED.

CONTRACTOR TO VERIFY ALL DIMENSIONS AND NOTIFY THE ENGINEER OF ANY DISCREPANCIES BEFORE WORK COMMENCES. DO NOT SCALE DRAWINGS.

ADDITIONAL EROSION AND SEDIMENT CONTROL MEASURES, INCLUDING STRAW BALE BARRIERS AND TEMPORARY CHECK DAMS, SHALL BE INSTALLED WHERE REQUIRED TO INTERCEPT RUNOFF, REDUCE FLOW VELOCITIES, PROMOTE SEDIMENT SETTLEMENT, AND PROTECT DOWNSTREAM DRAINAGE SYSTEMS AND RECEIVING AREAS. THE TYPE, LOCATION, AND EXTENT OF THESE MEASURES SHALL BE ADJUSTED AS NECESSARY BASED ON SITE CONDITIONS AND THE PROGRESSION OF CONSTRUCTION ACTIVITIES.

5m 0 5 10m

SCALE: 1:250

No.	REVISIONS	BY	DATE
03	ISSUED FOR APPROVAL	S.V.	14 OCT. 2026
02	RE-ISSUED FOR APPROVAL	S.V.	13 FEB. 2026
01	ISSUED FOR SPC APPROVAL	S.V.	12 NOV. 2025

LICENSED PROFESSIONAL ENGINEER
V. JOHNSON
100510576
10-14-2026
PROVINCE OF ONTARIO

NOT AUTHENTIC UNLESS SIGNED AND DATED

LRL
ENGINEERING | INGÉNIERIE
5430 Canotek Road | Ottawa, ON, K1J 9G2
www.lrl.ca | (613) 842-3434

CLIENT
THEIA PARTNERS

DESIGNED BY:	DRAWN BY:	APPROVED BY:
S.V.	S.V.	V.J.

PROJECT
30 CLEARY AVENUE ODAYANHAWAY DEVELOPMENT
30 CLEARY AVENUE, OTTAWA, ON

FILE NO. D07-12-25-0149
PLAN NO. 19403

DRAWING TITLE
EROSION AND SEDIMENT CONTROL PLAN

PROJECT NO. 2631617
DATE OCTOBER 2026

C101

LEGEND:

- EXISTING PROPERTY LINE TO REMAIN
- PROPOSED CURB
- PROPOSED DEPRESSED CURB (DC)
- PROPOSED TERRACING (3:1 MIN.)
- PROPOSED SILT FENCE AS PER OPSD 219.110
- PROPOSED LIMITS OF CONSTRUCTION
- PROPOSED DOOR ENTRANCE/EXIT
- PROPOSED GRASS AREA (100mm TOP SOIL & SOD)
- PROPOSED CONCRETE FEATURES/SLAB
- PROPOSED LIGHT DUTY ASPHALT
- PROPOSED HEAVY DUTY ASPHALT
- PROPOSED RIP RAP
- ×50.00 PROPOSED ELEVATION
- ×50.00HP PROPOSED HIGH POINT ELEVATION
- ×50.00LP PROPOSED LOW POINT ELEVATION
- ×50.00BC PROPOSED BOTTOM OF CURB / ASPHALT ELEVATION
- ×50.00TC PROPOSED TOP OF CURB ELEVATION
- ×50.00BW PROPOSED EXPOSED BOTTOM OF RETAINING WALL
- ×50.00TW PROPOSED TOP OF RETAINING WALL
- ×50.00EXSW MATCH INTO EXISTING SWALE ELEVATION
- ×50.00EX MATCH INTO EXISTING ELEVATION
- ×70.19 EXISTING ELEVATION
- PROPOSED OVERLAND MAJOR FLOW ROUTE
- SUB SUB PROPOSED 100mmØ PERFORATED SUBDRAIN
- STM STM PROPOSED STORM SEWER
- SAN SAN PROPOSED SANITARY SEWER
- WTR WTR PROPOSED WATERMAIN
- STM STM EXISTING STORM SEWER
- SAN SAN EXISTING SANITARY SEWER
- WTR WTR EXISTING WATERMAIN
- EXISTING MANHOLE
- EXISTING CATCHBASIN
- PROPOSED CATCHBASIN-MANHOLE/CATCHBASIN
- PROPOSED MANHOLE
- PROPOSED CURB STOP
- BH APPROXIMATE BOREHOLE LOCATION
- PROPOSED PIPE INSULATION
- PROPOSED 100 YEAR HIGH WATER LEVEL
- STORM WATERSHED EXTENT
- WS-XX CONTROLLED AREA RUNOFF — WATERSHED NAME / RUNOFF COEFFICIENT / AREA IN HECTARES

TOPOGRAPHIC SURVEY OF
LOTS 8, 9 & 10 & PART OF LOTS 6 & 7 (WEST CLYBOURNE AVENUE) PART OF LOTS 6 & 7 (EAST CLYBOURNE LOTS), PART OF LOT 6 (WEST ARDMORE AVENUE), PART OF CLYBOURNE AVENUE (CLOSED BY BY-LAW CR573286), PART OF CONNAUGHT STREET (CLOSED BY BY-LAW CR573286) REGISTERED PLAN NO.236 AND PART OF LOTS 26 & 27 CONCESSION 1 (OTTAWA FRONT)

BEARING NOTE
BEARINGS ARE GRID, DERIVED FROM THE CAN-NET VRS NETWORK OBSERVATIONS ON NCC HORIZONTAL CONTROL MONUMENTS 1773330 AND 1780121, CENTRAL MERIDIAN 76°00' WEST LONGITUDE MTM ZONE 9, NAD83 (CSRS) (2010.0).

1773330 N:5006060.00 E:324686.04
1780121 N:5003563.865 E:326004.67

ELEVATION NOTE
ELEVATIONS SHOWN HEREON ARE GEODETIC (CGVD-1928:1978) AND ARE DERIVED FROM THE CAN-NET VRS NETWORK BENCHMARK OTTAWA ELEVATION=95.230.

PAVEMENT STRUCTURE

COURSE	MATERIAL	THICKNESS (mm) AUTOMOBILE PARKING	THICKNESS (mm) TRUCK ROUTE (HEAVY TRAFFIC)
SURFACE	HL.3 A/C (PG 58-34)	40	50
BINDER	HL.8 A/C (PG 58-34)	50	70
BASECOURSE	OPSS GRANULAR "A"	150	150
SUBBASE	OPSS GRANULAR "B" TYPE II	400	500

NOTE:
IN PREPARATION FOR PAVEMENT CONSTRUCTION AT THIS SITE, ANY SURFICIAL OR NEAR SURFACE/SUBGRADE LEVEL TOPSOIL AND ANY SOFT, WET OR DELETERIOUS MATERIALS SHOULD BE REMOVED FROM THE PROPOSED PAVED AREAS. THE EXPOSED SUBGRADE SHOULD BE INSPECTED AND APPROVED BY GEOTECHNICAL PERSONNEL AND ANY SOFT AREAS EVIDENT SHOULD BE SUBEXCAVATED AND REPLACED WITH SUITABLE EARTH BORROW APPROVED BY THE GEOTECHNICAL ENGINEER. THE SUBGRADE SHOULD BE SHAPED AND CROWNED TO PROMOTE DRAINAGE OF THE SITE DRAINAGE STRUCTURES. FOLLOWING APPROVAL OF THE PREPARATION OF THE SUBGRADE, THE PAVEMENT GRANULARS MAY BE PLACED.
PAVEMENT STRUCTURE AS PER GEOTECHNICAL REPORT PREPARED BY WSP DATED NOVEMBER 07, 2023.

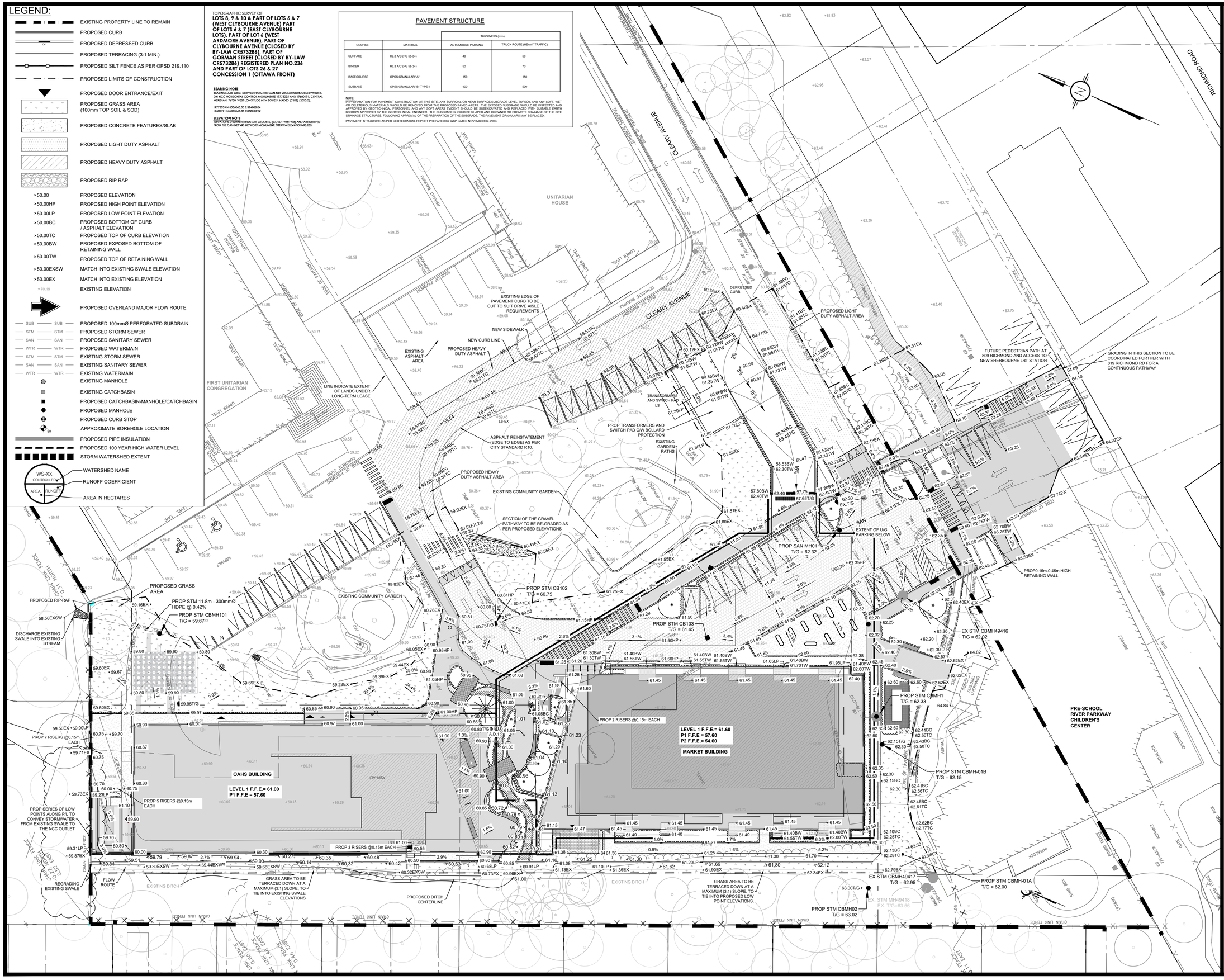

USE AND INTERPRETATION OF DRAWINGS

GENERAL CONDITIONS OF THE CONTRACT FOR CONSTRUCTION ARE PART OF THE CONTRACT DOCUMENTS AND DESCRIBE USE AND INTENT OF THE DRAWING. THE CONTRACT DOCUMENTS INCLUDE NOT ONLY THE DRAWINGS, BUT ALSO THE OWNER-CONTRACTOR AGREEMENTS, CONDITIONS OF THE CONTRACT, THE SPECIFICATIONS, ADDENDA, AND MODIFICATIONS ISSUED AFTER EXECUTION OF THE CONTRACT. THESE CONTRACT DOCUMENTS ARE COMPLEMENTARY, AND WHAT IS REQUIRED BY ANY ONE SHALL BE BINDING AS IF REQUIRED BY ALL. WORK NOT COMPLETELY DELINEATED HEREON SHALL BE CONSTRUCTED OF THE SAME MATERIALS AND DETAILED SIMILARLY AS WORK SHOWN MORE COMPLETELY ELSEWHERE IN THE CONTRACT DOCUMENTS.

BY USE OF THE DRAWINGS FOR CONSTRUCTION OF THE PROJECT, THE OWNER CONFIRMS THAT HE HAS REVIEWED AND APPROVED THE DRAWINGS. THE CONTRACTOR CONFIRMS THAT HE HAS VISITED THE SITE, FAMILIARIZED HIMSELF WITH THE LOCAL CONDITIONS, VERIFIED FIELD DIMENSIONS AND CORRELATED HIS OBSERVATIONS WITH THE REQUIREMENTS OF THE CONTRACT DOCUMENTS.

AS INSTRUMENTS OF SERVICE, ALL DRAWINGS, SPECIFICATIONS, CAD FILES OR OTHER ELECTRONIC MEDIA AND COPIED THERE OF FURNISHED BY THE ENGINEER ARE HIS PROPERTY. THEY ARE TO BE USED ONLY FOR THIS PROJECT AND ARE NOT TO BE USED ON ANY OTHER PROJECT, INCLUDING REPEATS OF THE PROJECT. CHANGES TO THE DRAWINGS MAY ONLY BE MADE BY THE ENGINEER.

UNLESS THE REVISION TITLE IS "ISSUED FOR CONSTRUCTION", THESE DRAWINGS SHALL BE CONSIDERED PRELIMINARY AND SHALL NOT BE USED AS A CONSTRUCTION DOCUMENT.

THESE DRAWINGS ILLUSTRATES THE WORK TO BE DONE. THE ENGINEER IS NOT RESPONSIBLE FOR THE MEANS, METHODS, TECHNIQUES, SEQUENCES, AND PROCEDURES USED TO DO THE WORK, OR THE SAFETY ASPECTS OF CONSTRUCTION, AND NOTHING ON THESE DRAWINGS EXPRESSED OR IMPLIED CHANGES THIS CONDITION. CONTRACTOR SHALL DETERMINE ALL CONDITIONS AT THE SITE AND SHALL BE RESPONSIBLE FOR KNOWING HOW THEY AFFECT THE WORK. SUBMITTAL OF A BID TO PERFORM THIS WORK IS ACKNOWLEDGEMENT OF THE RESPONSIBILITIES, AND THAT THEY HAVE BEEN FULLY CONSIDERED IN PLANNING OF THE WORK, AND THE BID PRICE. NO CLAIMS FOR EXTRA CHARGES DUE TO THESE CONDITIONS WILL BE FORTHCOMING.

UNAUTHORIZED CHANGES:

IN THE EVENT THE CLIENT, THE CLIENT'S CONTRACTORS OR SUBCONTRACTORS, OR ANYONE FOR WHOM THE CLIENT IS LEGALLY LIABLE MAKES OR PERMITS TO BE MADE ANY CHANGES TO ANY REPORTS, PLANS, SPECIFICATIONS OR OTHER CONSTRUCTION DOCUMENTS PREPARED BY LRL ASSOCIATES LTD. (LRL) WITHOUT OBTAINING LRL'S PRIOR WRITTEN CONSENT, THE CLIENT SHALL ASSUME FULL RESPONSIBILITY FOR THE RESULTS OF SUCH CHANGES, THEREFORE THE CLIENT AGREES TO WAIVE ANY CLAIM AGAINST LRL AND TO RELEASE LRL FROM ANY LIABILITY ARISING DIRECTLY OR INDIRECTLY FROM SUCH UNAUTHORIZED CHANGES.

IN ADDITION, THE CLIENT AGREES, TO THE FULLEST EXTENT PERMITTED BY LAW, TO INDEMNIFY AND HOLD HARMLESS LRL FROM ANY DAMAGES, LIABILITIES OR COST, INCLUDING REASONABLE ATTORNEY'S FEES AND COST OF DEFENSE, ARISING FROM SUCH CHANGES.

IN ADDITION, THE CLIENT AGREES TO INCLUDE IN ANY CONTRACTS FOR CONSTRUCTION APPROPRIATE LANGUAGE THAT PROHIBITS THE CONTRACTOR OR ANY SUBCONTRACTORS OF ANY TIER FROM MAKING ANY CHANGES OR MODIFICATIONS TO LRL'S CONSTRUCTION DOCUMENTS WITHOUT THE PRIOR WRITTEN APPROVAL OF LRL AND THAT FURTHER REQUIRES THE CONTRACTOR TO INDEMNIFY BOTH LRL AND THE CLIENT FROM ANY LIABILITY OR COST ARISING FROM SUCH CHANGES MADE WITHOUT SUCH PROPER AUTHORIZATION.

GENERAL NOTES:

EXISTING SERVICES AND UTILITIES SHOWN ON THESE DRAWINGS ARE TAKEN FROM THE BEST AVAILABLE RECORDS, BUT MAY NOT BE COMPLETE OR TO DATE. CONTRACTOR SHALL VERIFY IN FIELD FOR LOCATION AND ELEVATION OF PIPES AND CHECK WITH THE UTILITY COMPANIES BEFORE DIGGING OR PERFORMING WORK.

CONTRACTOR IS ADVISED TO COLLECT INFORMATION ON SOIL CONDITIONS BEFORE START OF CONSTRUCTION.

THE ENGINEER WAIVES ANY AND ALL RESPONSIBILITY AND LIABILITY FOR PROBLEMS WHICH ARISE FROM FAILURE TO FOLLOW THESE PLANS, SPECIFICATIONS AND THE DESIGN INTENT THEY CONVEY, OR FOR PROBLEMS WHICH ARISE FROM OTHERS' FAILURE TO OBTAIN AND/OR FOLLOW THE ENGINEER'S GUIDANCE WITH RESPECT TO ANY ERRORS, OMISSIONS, INCONSISTENCIES AMBIGUITIES OR CONFLICTS WHICH ARE ALLEGED.

CONTRACTOR TO VERIFY ALL DIMENSIONS AND NOTIFY THE ENGINEER OF ANY DISCREPANCIES BEFORE WORK COMMENCES. DO NOT SCALE DRAWINGS.

ADDITIONAL EROSION AND SEDIMENT CONTROL MEASURES, INCLUDING STRAW BALE BARRIERS AND TEMPORARY CHECK DAMS, SHALL BE INSTALLED WHERE REQUIRED TO INTERCEPT RUNOFF, REDUCE FLOW VELOCITIES, PROMOTE SEDIMENT SETTLEMENT, AND PROTECT DOWNSTREAM DRAINAGE SYSTEMS AND RECEIVING AREAS. THE TYPE, LOCATION, AND EXTENT OF THESE MEASURES SHALL BE ADJUSTED AS NECESSARY BASED ON SITE CONDITIONS AND THE PROGRESSION OF CONSTRUCTION ACTIVITIES.

5m 0 5 10m
SCALE: 1:250

No.	REVISIONS	BY	DATE
03	ISSUED FOR APPROVAL	S.V.	14 OCT. 2026
02	RE-ISSUED FOR APPROVAL	S.V.	13 FEB. 2026
01	ISSUED FOR SPC APPROVAL	S.V.	12 NOV. 2025

LICENSED PROFESSIONAL ENGINEER
V. JOHNSON
100510576
10-14-2026
PROVINCE OF ONTARIO

NOT AUTHENTIC UNLESS SIGNED AND DATED

LRL
ENGINEERING | INGÉNIERIE
5430 Canotek Road | Ottawa, ON, K1J 9G2
www.lrl.ca | (613) 842-3434

CLIENT
THEIA PARTNERS

DESIGNED BY:	DRAWN BY:	APPROVED BY:
S.V.	S.V.	V.J.

PROJECT
30 CLEARY AVENUE ODAYANHAWAY DEVELOPMENT
30 CLEARY AVENUE, OTTAWA, ON

FILE NO.	PLAN NO.
D07-12-25-0149	19403

DRAWING TITLE
GRADING AND DRAINAGE PLAN

PROJECT NO.	DATE
2631617	OCTOBER 2026

C301

LEGEND:

- EXISTING PROPERTY LINE TO REMAIN
- PROPOSED CURB
- PROPOSED DEPRESSED CURB
- PROPOSED TERRACING (3:1 MIN.)
- PROPOSED SILT FENCE AS PER OPSD 219.110
- PROPOSED LIMITS OF CONSTRUCTION
- PROPOSED DOOR ENTRANCE/EXIT
- PROPOSED GRASS AREA (100mm TOP SOIL & SOD)
- PROPOSED UNIT PAVERS
- PROPOSED CONCRETE FEATURES
- PROPOSED HEAVY DUTY ASPHALT
- PROPOSED LIGHT DUTY ASPHALT
- PROPOSED STONE DUST FEATURES
- PROPOSED DRY CREEK
- PROPOSED BRIDGE
- PROPOSED BENCH
- ×50.00 PROPOSED ELEVATION
- ×50.00HP PROPOSED HIGH POINT ELEVATION
- ×50.00S PROPOSED SWALE ELEVATION
- ×50.00BC PROPOSED BOTTOM OF CURB / ASPHALT ELEVATION
- ×50.00TC PROPOSED TOP OF CURB ELEVATION
- ×50.00BW PROPOSED EXPOSED BOTTOM OF RETAINING WALL
- ×50.00TW PROPOSED TOP OF RETAINING WALL
- ×50.00EX MATCH INTO EXISTING ELEVATION
- ×70.19 EXISTING ELEVATION
- PROPOSED OVERLAND MAJOR FLOW ROUTE
- SUB SUB PROPOSED 100mmØ PERFORATED SUBDRAIN
- STM STM PROPOSED STORM SEWER
- SAN SAN PROPOSED SANITARY SEWER
- WTR WTR PROPOSED WATERMAIN
- STM STM EXISTING STORM SEWER
- SAN SAN EXISTING SANITARY SEWER
- WTR WTR EXISTING WATERMAIN
- PROPOSED ROOF SCUPPER LOCATION
- EXISTING MANHOLE
- EXISTING CATCHBASIN
- PROPOSED CATCHBASIN-MANHOLE/CATCHBASIN
- PROPOSED MANHOLE
- PROPOSED CURB STOP
- PROPOSED PIPE INSULATION
- PROPOSED 100 YEAR HIGH WATER LEVEL
- STORM WATERSHED EXTENT
- CA-XX CONTROLLED AREA RUNOFF — CATCHMENT NAME; RUNOFF COEFFICIENT; AREA IN HECTARES

EDGE OF PAVEMENT

UNITARIAN HOUSE

FIRST UNITARIAN CONGREGATION

CLEARY AVENUE

EXISTING 200mm Ø PVC HYDRANT LEAD. TO BE CONNECTED TO PROPOSED 200mmØ WATERMAIN

PROP 200X200X150mm TEE CONNECTION

PROPOSED 200mm Ø SECONDARY WATER SERVICE

PROP 250mm Ø GATE VALVE

PROP 250x250x250x200mm CROSS CONNECTION

PROP 250X250X250mm TEE CONNECTION

PROP 250mm Ø GATE VALVE

PROP 250mmØ SECONDARY WATER SERVICE. REFER TO C402 FOR MORE DETAILS.

FUTURE PEDESTRIAN PATH AT 809 RICHMOND AND ACCESS TO NEW SHERBOURNW LRT STATION

STRUCTURE TO BE ADJUSTED/ REPLACED TO ACCOMMODATE LARGER PIPE

CR-01
STM OBV = 59.64
SAN INV = 60.36
VERTICAL CLEARANCE= 0.72m

PROPOSED HYDRANT AS PER CITY STD W19 C/W 1.0m-150mm Ø PVC HYDRANT LEAD, VALVE & VALVE BOX TO BE CONNECTED TO EX. 250mmØ WATERMAIN

PROPOSED TRENCH DRAIN T/G =57.65

TO DIRECT FLOW TO INTERNAL CISTERN VIA BLDG MECH SYSTEM. PRECISE LOCATION TO BE COORDINATED WITH ARCHITECTURE AND MECHANICAL PLANS.

CR-02
WTR OBV = 61.55
SAN INV = 60.68
VERTICAL CLEARANCE= 0.87m
PRECISE LOCATION & INVERT TO BE CONFIRMED BY CONTRACTOR.

CONNECT TO EX. STM CBMH3 (EQUIPPED W/ ICD)
PROP T/G = 62.30
INV. (SW)= ±59.07
EX. INV. (NE)= ±56.99
PRECISE LOCATION & INVERT TO BE CONFIRMED BY CONTRACTOR.

PROP SAN 6.5m - 200mmØ PVC DR-28 @ 2.14%

CONNECT TO EX. SAN MH
T/G = 62.31
INV. (NE)= ±60.20
INV. (SE)= ±60.35
PROP INV (NW): ±60.40
PRECISE LOCATION & INVERT TO BE CONFIRMED BY CONTRACTOR.
WATERTIGHT FRAME AND COVER REQUIRED

BENCH MARK FIRE HYDRANT.
TOP OF SPINDLE ELEV = 63.42

PROP 4.6m-250mmØ WTR SERVICE TO CONNECT TO EX. 250mm Ø WATERMAIN
WTR OBV @ STUB: 61.46
INV AND PRECISE LOCATION TO BE COORDINATED WITH ARCH AND MECHANICAL PLANS

PROP SAN 1.0m -200mmØ PVC DR-28 @ 3.00%
SAN INV @ STUB: 60.60
INV AND PRECISE LOCATION TO BE COORDINATED WITH ARCH & MECHANICAL PLANS.

PROP STM 15.3m - 525mmØ PVC DR-35 @ 2.48%

EX. STM CBMH49416
EX. T/G=62.02
INV. (W) =59.71
INV. (N) =59.45

STRUCTURE TO BE ADJUSTED TO ACCOMMODATE LARGER PIPE. PROPOSED PIPES TO FOLLOW THE EXISTING INV ELEVATIONS

EX. STM CBMH1
EX. T/G=62.33
INV. (SW) =60.08
INV. (E) =59.93

PROP STM 18.1m - 525mmØ PVC DR-35 @ 1.22%

PROP STM 4.1m - 525mmØ PVC DR-35 @ -1.69%

PROP STM CBMH-01B
T/G = 62.15
NE INV = 60.01

EX. 250mmØ STM SEWER PIPE CONVEYING FLOW FROM PRE-SCHOOL BUILDING TO BE REMOVED. PRECISE LOCATION, ALIGNMENT AND INV TO BE CONFIRMED BY CONTRACTOR ON-SITE.

PROP STM CBMH-01A
T/G = 62.00
S INV = 60.25

PROP STM 6.8m - 525mmØ PVC DR-35 @ 1.61%

PROP STM CBMH84
T/G = 63.02
SW INV = 60.42
N INV = 60.39

PROP 525mmØ STM INV= 60.02
(TO MATCH INTO EXISTING INV)
REFER TO ARCH AND MECHANICAL PLANS FOR ALIGNMENT AND CONNECTION DETAILS

PROP STM 10.4m - 525mmØ PVC DR-35 DR-35 @ 1.00%

PROP SAN01
T/G = 62.32
W INV = 60.57
SE INV = 60.54
WATERTIGHT FRAME AND COVER REQUIRED

PROP 525mmØ STORM SEWER CONNECTION. INV AT BUILDING = ±60.30
PRECISE LOCATION AND INVERT TO BE COORDINATED WITH ARCH AND MECHANICAL PLANS .

PROP WATER ENTRY ROOM LOCATED @ PARKING P1. REFER TO ARCH PLANS FOR MORE DETAILS.

PROP CISTERN LOCATED @ PARKING P1. REFER TO ARCH PLANS FOR MORE DETAILS.

EXTENT OF PARKING BELOW

22.5° TYP.

PROP STM 24.5m - 525mmØ PVC DR-35 DR-35 @ 1.00%

PROP STM CB102
T/G = 60.75
SW INV = 58.60
CBMH102 TO SERVE AS EMERGENCY CISTERN SPILLOVER POINT

PROP STM 7.6m - 150mmØ PVC DR-35 @ 0.66%

PROP STM CB103
T/G = 61.45
CB TO OUTLET TO U/G CISTERN VIA INTERNAL PLUMBING.

OUTLET INV TO BE COORDINATED WITH MECHNICAL PLANS.

CR-02
STM OBV = 59.99
WTR INV = 61.46
VERTICAL CLEARANCE= 1.47m
PRECISE LOCATION & INVERT TO BE CONFIRMED BY CONTRACTOR.

EX. 66.5-525mmØ STM SEWER @1.0%

SEWER CONVEYS STORMWATER FROM 851 RICHMOND RD+ PRE-SCHOOL BACKYARD TO EX.GARDEN POND. STORM SEWER TO BE RE-ROUTED THROUGH THE PROP BUILDING PARKING GARAGE. REFER TO MECHANICAL PLANS FOR MORE DETAILS. BY-PASS PUMPING TO BE REQUIRED DURING CONSTRUCTION.

MARKET BUILDING PROPOSED
16-STOREY RESIDENTIAL BUILDING

PROP STM 38.5m - 525mmØ PVC DR-35 @ 1.00%

EXTENT OF PARKING BELOW

PROP 525mmØ STORM SEWER CONNECTION. INV AT BUILDING = ±60.87
PRECISE LOCATION AND INVERT TO BE COORDINATED WITH ARCH AND MECHANICAL PLANS .

PROP STM CBMH02
T/G = 63.02
SE INV = 60.84
NE INV = 60.81

PROP STM 8.5m - 525mmØ PVC DR-35 @ 1.00%

EX. STM MH49418
EX. T/G=63.56
INV. (NE) =60.92
INV. (S) =60.92
INV. (NW) =60.92
RELEASE RATE= 267.8L/s

EX. STM CBMH49417
EX. T/G=62.65
INV. (SE) =60.38
INV. (N) =60.36
EXISTING HOLE TO BE SEATED

EX. 525mmØ STM- SEWER CONVEYING STORMWATER FROM 851 RICHMOND RD TO EXISTING MH4A AND EVENTUALLY DRAINING TO THE EX GARDEN PONDS VIA A CONTROLLED RELEASE RATE. PRECISE LOCATION, ALIGNMENT AND INV TO BE CONFIRMED BY CONTRACTOR ON-SITE.

45.0° TYP.

PROP CULVERT OUTLET INV = 58.60
EX GROUND ELEV = 58.58
C/W RODENT GRATE, RIP-RAP AS PER OPSD 801.101

CONTRACTOR TO REMOVE AND REPLACE SECTION OF EXISTING CHAIN LINK FENCE

PROP STM CULVERT11.8m - 300mmØ HDPE @ 0.42%

PROP STM CBMH101
T/G = 59.67
S INV = 58.68
W INV = 58.74
N INV = 58.65

PROPOSED HYDRANT AS PER CITY STD W19 C/W 56.5m-150mm Ø PVC HYDRANT LEAD, VALVE & VALVE BOX TO BE CONNECTED TO EX. 150mmØ WATERMAIN

REMOVE AND REPLACE EXISTING CULVERT

PROP STM CULVERT 14.3m - 300mmØ HDPE @ 0.49%

EXISTING NCC OUTLET

PROP CULVERT INV = 58.75
(TO MATCH TO EXISTING INV)

PROP INV @ SYSTEM = 58.80
PROP STM 2.6m - 250mmØ PVC DR-35 @ 2.29%

PRP ACO STORMBIXX VOL RETENTION SYSTEM (OR APPROVED EQUIVALENT)

PROP CISTERN OUTLET VIA INTERNAL PLUMBING.
PROP STM 3.0- 200mm Ø PVC DR-35 @ 1.0%.
STM INV @ SYSTEM = 58.80

DRAIN TO OUTLET TO U/G. CISTERN VIA INTERNAL PLUMBING
OUTLET INV. TO BE COORDINATED WITH MECHANICAL PLANS

PROP INV @ BUILDING = 58.55
PRECISE LOC AND INV TO BE COORDINATED WITH MECHANICAL PLANS

PROP OGS STORMCEPTOR EFO4 (OR APPROVED EQUIVALENT)
T/G = 59.95
W INV = 58.87
E INV = 58.81

PROP ROOF DRAINS OUTLET VIA INTERNAL PLUMBING.
PROP STM 4.6- 200mm Ø PVC DR-35 @ 1.0%
STM INV @ BUILDING = 58.83
STM INV @ SYSTEM = 58.80
PRECISE LOCATION AND INV TO BE COORDINATED WITH MECHANICAL PLANS

PROP CISTERN OUTLET VIA INTERNAL PLUMBING.
PROP STM 3.0- 200mm Ø PVC DR-35 @ 1.0%.
STM INV @ BUILDING = 58.90
PRECISE LOCATION AND INV TO BE COORDINATED WITH MECHANICAL PLANS

OAHS BUILDING PROPOSED
6-STOREY RESIDENTIAL BUILDING

EXTENT OF PARKING BELOW

5m 0 5 10m
SCALE: 1:250

USE AND INTERPRETATION OF DRAWINGS

GENERAL CONDITIONS OF THE CONTRACT FOR CONSTRUCTION ARE PART OF THE CONTRACT DOCUMENTS AND DESCRIBE USE AND INTENT OF THE DRAWING. THE CONTRACT DOCUMENTS INCLUDE NOT ONLY THE DRAWINGS, BUT ALSO THE OWNER-CONTRACTOR AGREEMENTS, CONDITIONS OF THE CONTRACT, THE SPECIFICATIONS, ADDENDA, AND MODIFICATIONS ISSUED AFTER EXECUTION OF THE CONTRACT. THESE CONTRACT DOCUMENTS ARE COMPLEMENTARY, AND WHAT IS REQUIRED BY ANY ONE SHALL BE BINDING AS IF REQUIRED BY ALL. WORK NOT COMPLETELY DELINEATED HEREON SHALL BE CONSTRUCTED OF THE SAME MATERIALS AND DETAILED SIMILARLY AS WORK SHOWN MORE COMPLETELY ELSEWHERE IN THE CONTRACT DOCUMENTS.

BY USE OF THE DRAWINGS FOR CONSTRUCTION OF THE PROJECT, THE OWNER CONFIRMS THAT HE HAS REVIEWED AND APPROVED THE DRAWINGS. THE CONTRACTOR CONFIRMS THAT HE HAS VISITED THE SITE, FAMILIARIZED HIMSELF WITH THE LOCAL CONDITIONS, VERIFIED FIELD DIMENSIONS AND CORRELATED HIS OBSERVATIONS WITH THE REQUIREMENTS OF THE CONTRACT DOCUMENTS.

AS INSTRUMENTS OF SERVICE, ALL DRAWINGS, SPECIFICATIONS, CAD FILES OR OTHER ELECTRONIC MEDIA AND COPIED THERE OF FURNISHED BY THE ENGINEER ARE HIS PROPERTY. THEY ARE TO BE USED ONLY FOR THIS PROJECT AND ARE NOT TO BE USED ON ANY OTHER PROJECT, INCLUDING REPEATS OF THE PROJECT. CHANGES TO THE DRAWINGS MAY ONLY BE MADE BY THE ENGINEER.

UNLESS THE REVISION TITLE IS "ISSUED FOR CONSTRUCTION", THESE DRAWINGS SHALL BE CONSIDERED PRELIMINARY AND SHALL NOT BE USED AS A CONSTRUCTION DOCUMENT.

THESE DRAWINGS ILLUSTRATES THE WORK TO BE DONE. THE ENGINEER IS NOT RESPONSIBLE FOR THE MEANS, METHODS, TECHNIQUES, SEQUENCES, AND PROCEDURES USED TO DO THE WORK, OR THE SAFETY ASPECTS OF CONSTRUCTION, AND NOTHING ON THESE DRAWINGS EXPRESSED OR IMPLIED CHANGES THIS CONDITION. CONTRACTOR SHALL DETERMINE ALL CONDITIONS AT THE SITE AND SHALL BE RESPONSIBLE FOR KNOWING HOW THEY AFFECT THE WORK. SUBMITTAL OF A BID TO PERFORM THIS WORK IS ACKNOWLEDGEMENT OF THE RESPONSIBILITIES, AND THAT THEY HAVE BEEN FULLY CONSIDERED IN PLANNING OF THE WORK, AND THE BID PRICE. NO CLAIMS FOR EXTRA CHANGES DUE TO THESE CONDITIONS WILL BE FORTHCOMING.

UNAUTHORIZED CHANGES:

IN THE EVENT THE CLIENT, THE CLIENT'S CONTRACTORS OR SUBCONTRACTORS, OR ANYONE FOR WHOM THE CLIENT IS LEGALLY LIABLE MAKES OR PERMITS TO BE MADE ANY CHANGES TO ANY REPORTS, PLANS, SPECIFICATIONS OR OTHER CONSTRUCTION DOCUMENTS PREPARED BY LRL ASSOCIATES LTD. (LRL) WITHOUT OBTAINING LRL'S PRIOR WRITTEN CONSENT, THE CLIENT SHALL ASSUME FULL RESPONSIBILITY FOR THE RESULTS OF SUCH CHANGES, THEREFORE THE CLIENT AGREES TO WAIVE ANY CLAIM AGAINST LRL AND TO RELEASE LRL FROM ANY LIABILITY ARISING DIRECTLY OR INDIRECTLY FROM SUCH UNAUTHORIZED CHANGES.

IN ADDITION, THE CLIENT AGREES, TO THE FULLEST EXTENT PERMITTED BY LAW, TO INDEMNIFY AND HOLD HARMLESS LRL FROM ANY DAMAGES, LIABILITIES OR COST, INCLUDING REASONABLE ATTORNEY'S FEES AND COST OF DEFENSE, ARISING FROM SUCH CHANGES.

IN ADDITION, THE CLIENT AGREES TO INCLUDE IN ANY CONTRACTS FOR CONSTRUCTION APPROPRIATE LANGUAGE THAT PROHIBITS THE CONTRACTOR OR ANY SUBCONTRACTORS OF ANY TIER FROM MAKING ANY CHANGES OR MODIFICATIONS TO LRL'S CONSTRUCTION DOCUMENTS WITHOUT THE PRIOR WRITTEN APPROVAL OF LRL AND THAT FURTHER REQUIRES THE CONTRACTOR TO INDEMNIFY BOTH LRL AND THE CLIENT FROM ANY LIABILITY OR COST ARISING FROM SUCH CHANGES MADE WITHOUT SUCH PROPER AUTHORIZATION.

GENERAL NOTES:

EXISTING SERVICES AND UTILITIES SHOWN ON THESE DRAWINGS ARE TAKEN FROM THE BEST AVAILABLE RECORDS, BUT MAY NOT BE COMPLETE OR TO DATE. CONTRACTOR SHALL VERIFY IN FIELD FOR LOCATION AND ELEVATION OF PIPES AND CHECK WITH THE UTILITY COMPANIES BEFORE DIGGING OR PERFORMING WORK.

CONTRACTOR IS ADVISED TO COLLECT INFORMATION ON SOIL CONDITIONS BEFORE START OF CONSTRUCTION.

THE ENGINEER WAIVES ANY AND ALL RESPONSIBILITY AND LIABILITY FOR PROBLEMS WHICH ARISE FROM FAILURE TO FOLLOW THESE PLANS, SPECIFICATIONS AND THE DESIGN INTENT THEY CONVEY, OR FOR PROBLEMS WHICH ARISE FROM OTHERS' FAILURE TO OBTAIN AND/OR FOLLOW THE ENGINEER'S GUIDANCE WITH RESPECT TO ANY ERRORS, OMISSIONS, INCONSISTENCIES AMBIGUITIES OR CONFLICTS WHICH ARE ALLEGED.

CONTRACTOR TO VERIFY ALL DIMENSIONS AND NOTIFY THE ENGINEER OF ANY DISCREPANCIES BEFORE WORK COMMENCES. DO NOT SCALE DRAWINGS.

ADDITIONAL EROSION AND SEDIMENT CONTROL MEASURES, INCLUDING STRAW BALE BARRIERS AND TEMPORARY CHECK DAMS, SHALL BE INSTALLED WHERE REQUIRED TO INTERCEPT RUNOFF, REDUCE FLOW VELOCITIES, PROMOTE SEDIMENT SETTLEMENT, AND PROTECT DOWNSTREAM DRAINAGE SYSTEMS AND RECEIVING AREAS. THE TYPE, LOCATION, AND EXTENT OF THESE MEASURES SHALL BE ADJUSTED AS NECESSARY BASED ON SITE CONDITIONS AND THE PROGRESSION OF CONSTRUCTION ACTIVITIES.

No.	REVISIONS	BY	DATE
03	ISSUED FOR APPROVAL	S.V.	14 OCT. 2026
02	RE-ISSUED FOR APPROVAL	S.V.	13 FEB. 2026
01	ISSUED FOR SPC APPROVAL	S.V.	12 NOV. 2025

LICENSED PROFESSIONAL ENGINEER
V. JOHNSON
100510576
10-14-2026
PROVINCE OF ONTARIO

NOT AUTHENTIC UNLESS SIGNED AND DATED

LRL
ENGINEERING | INGÉNIERIE
5430 Canotek Road | Ottawa, ON, K1J 9G2
www.lrl.ca | (613) 842-3434

CLIENT
THEIA PARTNERS

DESIGNED BY:	DRAWN BY:	APPROVED BY:
S.V.	S.V.	V.J.

PROJECT
30 CLEARY AVENUE ODAYANHAWAY DEVELOPMENT
30 CLEARY AVENUE, OTTAWA, ON

FILE NO.	PLAN NO.
D07-12-25-0149	19403

DRAWING TITLE
SERVICING PLAN

PROJECT NO.	
2631617	C401
DATE	
OCTOBER 2026	

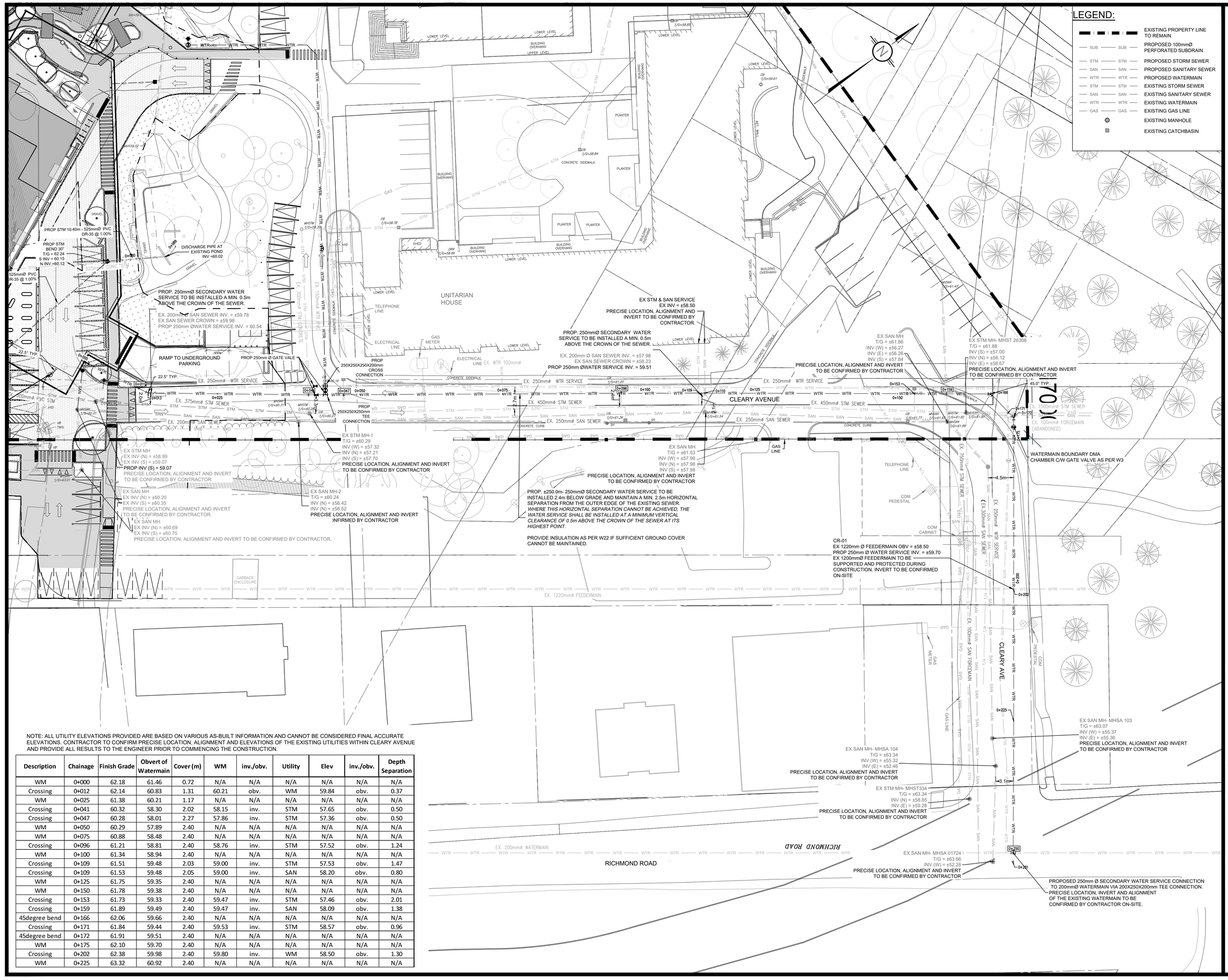

NOTE: ALL UTILITY ELEVATIONS PROVIDED ARE BASED ON VARIOUS AS-BUILT INFORMATION AND CANNOT BE CONSIDERED FINAL ACCURATE ELEVATIONS. CONTRACTOR TO CONFIRM PRECISE LOCATION, ALIGNMENT AND ELEVATIONS OF THE EXISTING UTILITIES WITHIN CLEARY AVENUE AND PROVIDE ALL RESULTS TO THE ENGINEER PRIOR TO COMMENCING THE CONSTRUCTION.

Description	Chainage	Finish Grade	Obvert of Watermain	Cover (m)	WM	inv./obv.	Utility	Elev	inv./obv.	Depth Separation
WM	0+000	62.18	61.46	0.72	N/A	N/A	N/A	N/A	N/A	N/A
Crossing	0+012	62.14	60.83	1.31	60.21	obv.	WM	59.84	obv.	0.37
WM	0+025	61.38	60.21	1.17	N/A	N/A	N/A	N/A	N/A	N/A
Crossing	0+041	60.32	58.30	2.02	58.15	inv.	STM	57.65	obv.	0.50
Crossing	0+047	60.28	58.01	2.27	57.86	inv.	STM	57.36	obv.	0.50
WM	0+050	60.29	57.89	2.40	N/A	N/A	N/A	N/A	N/A	N/A
WM	0+075	60.88	58.48	2.40	N/A	N/A	N/A	N/A	N/A	N/A
Crossing	0+096	61.21	58.81	2.40	58.76	inv.	STM	57.52	obv.	1.24
WM	0+100	61.34	58.94	2.40	N/A	N/A	N/A	N/A	N/A	N/A
Crossing	0+109	61.51	59.48	2.03	59.00	inv.	STM	57.53	obv.	1.47
Crossing	0+109	61.53	59.48	2.05	59.00	inv.	SAN	58.20	obv.	0.80
WM	0+125	61.75	59.35	2.40	N/A	N/A	N/A	N/A	N/A	N/A
WM	0+150	61.78	59.38	2.40	N/A	N/A	N/A	N/A	N/A	N/A
Crossing	0+153	61.73	59.33	2.40	59.47	inv.	STM	57.46	obv.	2.01
Crossing	0+159	61.89	59.49	2.40	59.47	inv.	SAN	58.09	obv.	1.38
45degree bend	0+166	62.06	59.66	2.40	N/A	N/A	N/A	N/A	N/A	N/A
Crossing	0+171	61.84	59.44	2.40	59.53	inv.	STM	58.57	obv.	0.96
45degree bend	0+172	61.91	59.51	2.40	N/A	N/A	N/A	N/A	N/A	N/A
WM	0+175	62.10	59.70	2.40	N/A	N/A	N/A	N/A	N/A	N/A
Crossing	0+202	62.38	59.98	2.40	59.80	inv.	WM	58.50	obv.	1.30
WM	0+225	63.32	60.92	2.40	N/A	N/A	N/A	N/A	N/A	N/A

USE AND INTERPRETATION OF DRAWINGS

GENERAL CONDITIONS OF THE CONTRACT FOR CONSTRUCTION ARE PART OF THE CONTRACT DOCUMENTS AND DESCRIBE USE AND INTENT OF THE DRAWING. THE CONTRACT DOCUMENTS INCLUDE NOT ONLY THE DRAWINGS, BUT ALSO THE OWNER-CONTRACTOR AGREEMENTS, CONDITIONS OF THE CONTRACT, THE SPECIFICATIONS, ADDENDA, AND MODIFICATIONS ISSUED AFTER EXECUTION OF THE CONTRACT. THESE CONTRACT DOCUMENTS ARE COMPLEMENTARY, AND WHAT IS REQUIRED BY ANY ONE SHALL BE BINDING AS IF REQUIRED BY ALL. WORK NOT COMPLETELY DELINEATED HEREON SHALL BE CONSTRUCTED OF THE SAME MATERIALS AND DETAILED SIMILARLY AS WORK SHOWN MORE COMPLETELY ELSEWHERE IN THE CONTRACT DOCUMENTS.

BY USE OF THE DRAWINGS FOR CONSTRUCTION OF THE PROJECT, THE OWNER CONFIRMS THAT HE HAS REVIEWED AND APPROVED THE DRAWINGS. THE CONTRACTOR CONFIRMS THAT HE HAS VISITED THE SITE, FAMILIARIZED HIMSELF WITH THE LOCAL CONDITIONS, VERIFIED FIELD DIMENSIONS AND CORRELATED HIS OBSERVATIONS WITH THE REQUIREMENTS OF THE CONTRACT DOCUMENTS.

AS INSTRUMENTS OF SERVICE, ALL DRAWINGS, SPECIFICATIONS, CAD FILES OR OTHER ELECTRONIC MEDIA AND COPIED THERE OF FURNISHED BY THE ENGINEER ARE HIS PROPERTY. THEY ARE TO BE USED ONLY FOR THIS PROJECT AND ARE NOT TO BE USED ON ANY OTHER PROJECT, INCLUDING REPEATS OF THE PROJECT. CHANGES TO THE DRAWINGS MAY ONLY BE MADE BY THE ENGINEER.

UNLESS THE REVISION TITLE IS "ISSUED FOR CONSTRUCTION", THESE DRAWINGS SHALL BE CONSIDERED PRELIMINARY AND SHALL NOT BE USED AS A CONSTRUCTION DOCUMENT.

THESE DRAWINGS ILLUSTRATES THE WORK TO BE DONE. THE ENGINEER IS NOT RESPONSIBLE FOR THE MEANS, METHODS, TECHNIQUES, SEQUENCES, AND PROCEDURES USED TO DO THE WORK, OR THE SAFETY ASPECTS OF CONSTRUCTION, AND NOTHING ON THESE DRAWINGS EXPRESSED OR IMPLIED CHANGES THIS CONDITION. CONTRACTOR SHALL DETERMINE ALL CONDITIONS AT THE SITE AND SHALL BE RESPONSIBLE FOR KNOWING HOW THEY AFFECT THE WORK. SUBMITTAL OF A BID TO PERFORM THIS WORK IS ACKNOWLEDGEMENT OF THE RESPONSIBILITIES, AND THAT THEY HAVE BEEN FULLY CONSIDERED IN PLANNING OF THE WORK, AND THE BID PRICE. NO CLAIMS FOR EXTRA CHANGES DUE TO THESE CONDITIONS WILL BE FORTHCOMING.

UNAUTHORIZED CHANGES:

IN THE EVENT THE CLIENT, THE CLIENT'S CONTRACTORS OR SUBCONTRACTORS, OR ANYONE FOR WHOM THE CLIENT IS LEGALLY LIABLE MAKES OR PERMITS TO BE MADE ANY CHANGES TO ANY REPORTS, PLANS, SPECIFICATIONS OR OTHER CONSTRUCTION DOCUMENTS PREPARED BY LRL ASSOCIATES LTD. (LRL) WITHOUT OBTAINING LRL'S PRIOR WRITTEN CONSENT, THE CLIENT SHALL ASSUME FULL RESPONSIBILITY FOR THE RESULTS OF SUCH CHANGES, THEREFORE THE CLIENT AGREES TO WAIVE ANY CLAIM AGAINST LRL AND TO RELEASE LRL FROM ANY LIABILITY ARISING DIRECTLY OR INDIRECTLY FROM SUCH UNAUTHORIZED CHANGES.

IN ADDITION, THE CLIENT AGREES, TO THE FULLEST EXTENT PERMITTED BY LAW, TO INDEMNIFY AND HOLD HARMLESS LRL FROM ANY DAMAGES, LIABILITIES OR COST, INCLUDING REASONABLE ATTORNEY'S FEES AND COST OF DEFENSE, ARISING FROM SUCH CHANGES.

IN ADDITION, THE CLIENT AGREES TO INCLUDE IN ANY CONTRACTS FOR CONSTRUCTION APPROPRIATE LANGUAGE THAT PROHIBITS THE CONTRACTOR OR ANY SUBCONTRACTORS OF ANY TIER FROM MAKING ANY CHANGES OR MODIFICATIONS TO LRL'S CONSTRUCTION DOCUMENTS WITHOUT THE PRIOR WRITTEN APPROVAL OF LRL AND THAT FURTHER REQUIRES THE CONTRACTOR TO INDEMNIFY BOTH LRL AND THE CLIENT FROM ANY LIABILITY OR COST ARISING FROM SUCH CHANGES MADE WITHOUT SUCH PROPER AUTHORIZATION.

GENERAL NOTES:

EXISTING SERVICES AND UTILITIES SHOWN ON THESE DRAWINGS ARE TAKEN FROM THE BEST AVAILABLE RECORDS, BUT MAY NOT BE COMPLETE OR TO DATE. CONTRACTOR SHALL VERIFY IN FIELD FOR LOCATION AND ELEVATION OF PIPES AND CHECK WITH THE UTILITY COMPANIES BEFORE DIGGING OR PERFORMING WORK.

CONTRACTOR IS ADVISED TO COLLECT INFORMATION ON SOIL CONDITIONS BEFORE START OF CONSTRUCTION.

THE ENGINEER WAIVES ANY AND ALL RESPONSIBILITY AND LIABILITY FOR PROBLEMS WHICH ARISE FROM FAILURE TO FOLLOW THESE PLANS, SPECIFICATIONS AND THE DESIGN INTENT THEY CONVEY, OR FOR PROBLEMS WHICH ARISE FROM OTHERS' FAILURE TO OBTAIN AND/OR FOLLOW THE ENGINEER'S GUIDANCE WITH RESPECT TO ANY ERRORS, OMISSIONS, INCONSISTENCIES AMBIGUITIES OR CONFLICTS WHICH ARE ALLEGED.

CONTRACTOR TO VERIFY ALL DIMENSIONS AND NOTIFY THE ENGINEER OF ANY DISCREPANCIES BEFORE WORK COMMENCES. DO NOT SCALE DRAWINGS.

ADDITIONAL EROSION AND SEDIMENT CONTROL MEASURES, INCLUDING STRAW BALE BARRIERS AND TEMPORARY CHECK DAMS, SHALL BE INSTALLED WHERE REQUIRED TO INTERCEPT RUNOFF, REDUCE FLOW VELOCITIES, PROMOTE SEDIMENT SETTLEMENT, AND PROTECT DOWNSTREAM DRAINAGE SYSTEMS AND RECEIVING AREAS. THE TYPE, LOCATION, AND EXTENT OF THESE MEASURES SHALL BE ADJUSTED AS NECESSARY BASED ON SITE CONDITIONS AND THE PROGRESSION OF CONSTRUCTION ACTIVITIES.

No.	REVISIONS	BY	DATE
03	ISSUED FOR APPROVAL	S.V.	14 OCT. 2026
02	RE-ISSUED FOR APPROVAL	S.V.	13 FEB. 2026
01	ISSUED FOR SPC APPROVAL	S.V.	12 NOV. 2025

LICENSED PROFESSIONAL ENGINEER
V. JOHNSON
100510576
10-14-2026
PROVINCE OF ONTARIO

NOT AUTHENTIC UNLESS SIGNED AND DATED

LRL
ENGINEERING | INGÉNIERIE
5430 Canotek Road | Ottawa, ON, K1J 9G2
www.lrl.ca | (613) 842-3434

CLIENT
THEIA PARTNERS

DESIGNED BY:	DRAWN BY:	APPROVED BY:
S.V.	S.V.	V.J.

PROJECT
30 CLEARY AVENUE ODAYANHAWAY DEVELOPMENT
30 CLEARY AVENUE, OTTAWA, ON

FILE NO. D07-12-25-0149
PLAN NO. 19403

DRAWING TITLE
SERVICING PLAN- SECONDARY WATER

PROJECT NO. 2631617
DATE OCTOBER 2026

C402

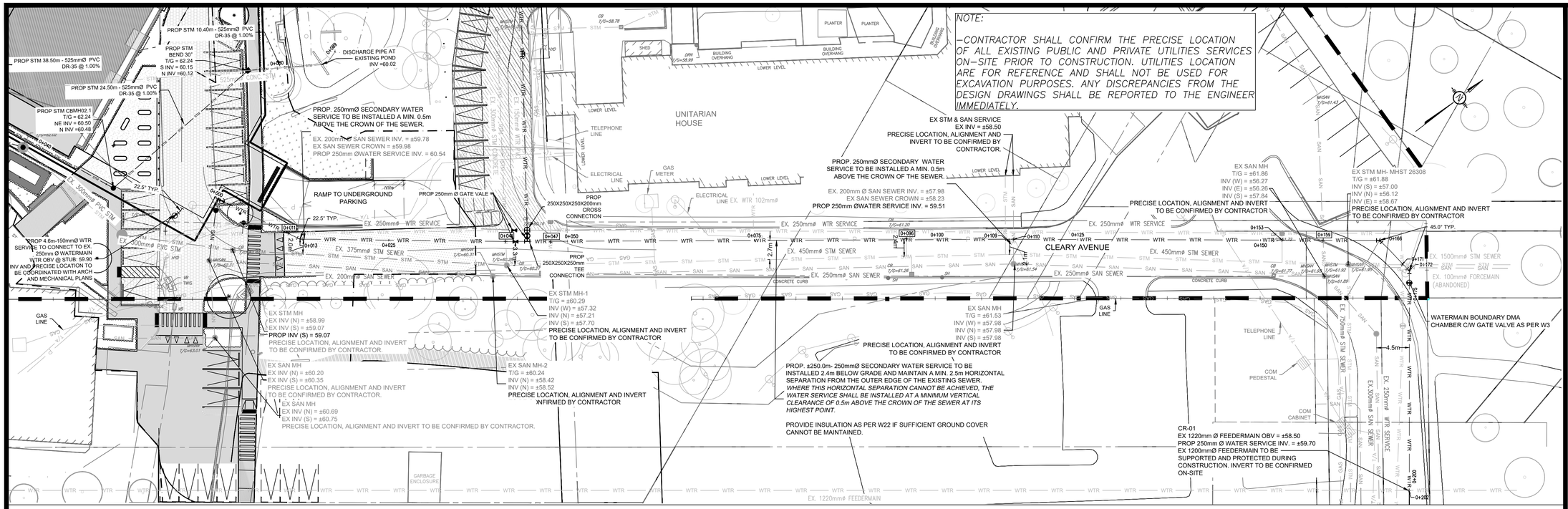

PROP WATER SERVICE STA. 0+000 TO 0+166

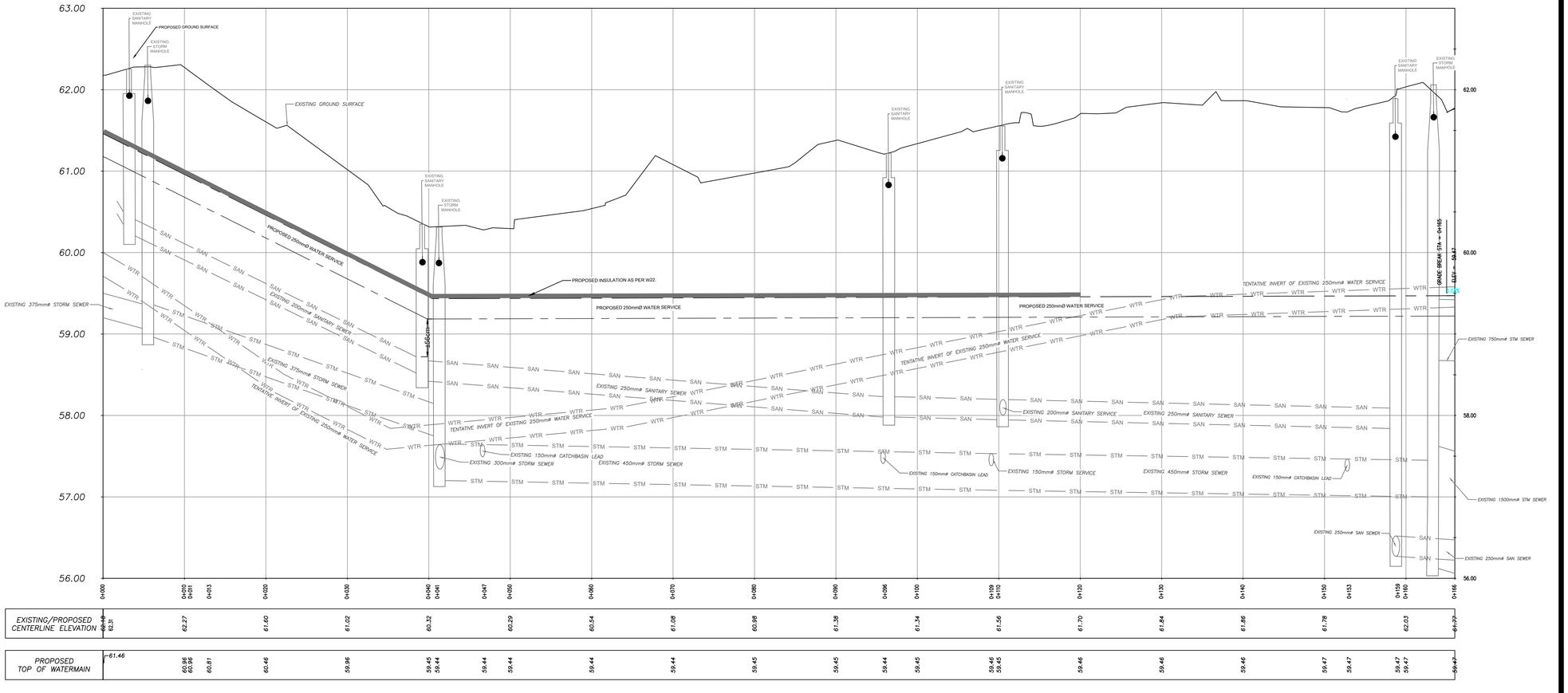

NOTE:
-PROPOSED WATER SERVICE HAS BEEN DESIGNED WITH ASSUMED ELEVATION BASED ON BEST AVAILABLE INFORMATION. DESIGN SUBJECT TO ADJUSTMENT IN THE FIELD PENDING CONFIRMATION OF EXISTING INVERT ELEVATIONS.

- PROFILE OF EXISTING STORM/SANITARY/WATERMAIN SHOWN DIAGRAMMATICALLY BASED ON HISTORICALLY AVAILABLE ELEVATION DATA. ACTUAL INVERT TO BE FIELD CONFIRMED

-EXISTING GROUND SURFACE ELEVATIONS TO BE CONFIRMED ON-SITE PRIOR TO START OF CONSTRUCTION AND REPORT ANY DISCREPANCIES TO THE ENGINEER.

-CONTRACTOR TO CONFIRM THE PRECISE ALIGNMENT, LOCATION, AND INVERT ELEVATIONS OF ALL EXISTING WATER, STORM, AND SANITARY SERVICES ON-SITE PRIOR TO CONSTRUCTION. ANY DISCREPANCIES FROM THE DESIGN DRAWINGS SHALL BE REPORTED TO THE ENGINEER IMMEDIATELY.

-PROPOSED WATER SERVICE TO BE INSTALLED 2.4m BELOW GROUND SURFACE. PROVIDE INSULATION WHERE SUFFICIENT COVER CAN NOT BE MAINTAINED.

-CONTRACTOR SHALL CARRY OUT ON-FIELD LOCATES TO IDENTIFY PRECISE LOCATION OF EXISTING SUB-SURFACE UTILITIES AND REPORT ANY CONFLICTS BETWEEN PROPOSED AND EXISTING SUB-SURFACE INFRASTRUCTURE.

-THE PROPOSED WATER SERVICE MUST MAINTAIN A MINIMUM HORIZONTAL SEPARATION OF 2.5m FROM ALL ADJACENT SEWERS. WHERE THIS HORIZONTAL SEPARATION CANNOT BE ACHIEVED, THE WATER SERVICE SHALL BE INSTALLED AT A MINIMUM VERTICAL CLEARANCE OF 0.5m ABOVE THE CROWN OF THE SEWER AT ITS HIGHEST POINT.

USE AND INTERPRETATION OF DRAWINGS

GENERAL CONDITIONS OF THE CONTRACT FOR CONSTRUCTION ARE PART OF THE CONTRACT DOCUMENTS AND DESCRIBE USE AND INTENT OF THE DRAWINGS. THE CONTRACT DOCUMENTS INCLUDE NOT ONLY THE DRAWINGS, BUT ALSO THE OWNER-CONTRACTOR AGREEMENTS, CONDITIONS OF THE CONTRACT, THE SPECIFICATIONS, ADDENDA, AND MODIFICATIONS ISSUED AFTER EXECUTION OF THE CONTRACT. THESE CONTRACT DOCUMENTS ARE COMPLEMENTARY, AND WHAT IS REQUIRED BY ANY ONE SHALL BE BINDING AS IF REQUIRED BY ALL. WORK NOT COMPLETELY DELINEATED HEREON SHALL BE CONSTRUCTED OF THE SAME MATERIALS AND DETAILED SIMILARLY AS WORK SHOWN MORE COMPLETELY ELSEWHERE IN THE CONTRACT DOCUMENTS.

BY USE OF THE DRAWINGS FOR CONSTRUCTION OF THE PROJECT, THE OWNER CONFIRMS THAT HE HAS REVIEWED AND APPROVED THE DRAWINGS. THE CONTRACTOR CONFIRMS THAT HE HAS VISITED THE SITE, FAMILIARIZED HIMSELF WITH THE LOCAL CONDITIONS, VERIFIED FIELD DIMENSIONS AND CORRELATED HIS OBSERVATIONS WITH THE REQUIREMENTS OF THE CONTRACT DOCUMENTS.

AS INSTRUMENTS OF SERVICE, ALL DRAWINGS, SPECIFICATIONS, CAD FILES OR OTHER ELECTRONIC MEDIA AND COPIED THERE OF FURNISHED BY THE ENGINEER ARE HIS PROPERTY. THEY ARE TO BE USED ONLY FOR THIS PROJECT AND ARE NOT TO BE USED ON ANY OTHER PROJECT, INCLUDING REPEATS OF THE PROJECT. CHANGES TO THE DRAWINGS MAY ONLY BE MADE BY THE ENGINEER.

UNLESS THE REVISION TITLE IS "ISSUED FOR CONSTRUCTION", THESE DRAWINGS SHALL BE CONSIDERED PRELIMINARY AND SHALL NOT BE USED AS A CONSTRUCTION DOCUMENT.

THESE DRAWINGS ILLUSTRATES THE WORK TO BE DONE. THE ENGINEER IS NOT RESPONSIBLE FOR THE MEANS, METHODS, TECHNIQUES, SEQUENCES, AND PROCEDURES USED TO DO THE WORK, OR THE SAFETY ASPECTS OF CONSTRUCTION, AND NOTHING ON THESE DRAWINGS EXPRESSED OR IMPLIED CHANGES THIS CONDITION. CONTRACTOR SHALL DETERMINE ALL CONDITIONS AT THE SITE AND SHALL BE RESPONSIBLE FOR KNOWING HOW THEY AFFECT THE WORK. SUBMITTAL OF A BID TO PERFORM THIS WORK IS ACKNOWLEDGEMENT OF THE RESPONSIBILITIES, AND THAT THEY HAVE BEEN FULLY CONSIDERED IN PLANNING OF THE WORK, AND THE BID PRICE. NO CLAIMS FOR EXTRA CHANGES DUE TO THESE CONDITIONS WILL BE FORTHCOMING.

UNAUTHORIZED CHANGES:

IN THE EVENT THE CLIENT, THE CLIENT'S CONTRACTORS OR SUBCONTRACTORS, OR ANYONE FOR WHOM THE CLIENT IS LEGALLY LIABLE MAKES OR PERMITS TO BE MADE ANY CHANGES TO ANY REPORTS, PLANS, SPECIFICATIONS OR OTHER CONSTRUCTION DOCUMENTS PREPARED BY LRL ASSOCIATES LTD. (LRL) WITHOUT OBTAINING LRL'S PRIOR WRITTEN CONSENT, THE CLIENT SHALL ASSUME FULL RESPONSIBILITY FOR THE RESULTS OF SUCH CHANGES. THEREFORE THE CLIENT AGREES TO WAIVE ANY CLAIM AGAINST LRL AND TO RELEASE LRL FROM ANY LIABILITY ARISING DIRECTLY OR INDIRECTLY FROM SUCH UNAUTHORIZED CHANGES.

IN ADDITION, THE CLIENT AGREES, TO THE FULLEST EXTENT PERMITTED BY LAW, TO INDEMNIFY AND HOLD HARMLESS LRL FROM ANY DAMAGES, LIABILITIES OR COST, INCLUDING REASONABLE ATTORNEY'S FEES AND COST OF DEFENSE, ARISING FROM SUCH CHANGES.

IN ADDITION, THE CLIENT AGREES TO INCLUDE IN ANY CONTRACTS FOR CONSTRUCTION APPROPRIATE LANGUAGE THAT PROHIBITS THE CONTRACTOR OR ANY SUBCONTRACTORS OF ANY TIER FROM MAKING ANY CHANGES OR MODIFICATIONS TO LRL'S CONSTRUCTION DOCUMENTS WITHOUT THE PRIOR WRITTEN APPROVAL OF LRL AND THAT FURTHER REQUIRES THE CONTRACTOR TO INDEMNIFY BOTH LRL AND THE CLIENT FROM ANY LIABILITY OR COST ARISING FROM SUCH CHANGES MADE WITHOUT SUCH PROPER AUTHORIZATION.

GENERAL NOTES:

EXISTING SERVICES AND UTILITIES SHOWN ON THESE DRAWINGS ARE TAKEN FROM THE BEST AVAILABLE RECORDS, BUT MAY NOT BE COMPLETE OR TO DATE. CONTRACTOR SHALL VERIFY IN FIELD FOR LOCATION AND ELEVATION OF PIPES AND CHECK WITH THE UTILITY COMPANIES BEFORE DIGGING OR PERFORMING WORK.

CONTRACTOR IS ADVISED TO COLLECT INFORMATION ON SOIL CONDITIONS BEFORE START OF CONSTRUCTION.

THE ENGINEER WAIVES ANY AND ALL RESPONSIBILITY AND LIABILITY FOR PROBLEMS WHICH ARISE FROM FAILURE TO FOLLOW THESE PLANS, SPECIFICATIONS AND THE DESIGN INTENT THEY CONVEY, OR FOR PROBLEMS WHICH ARISE FROM OTHERS' FAILURE TO OBTAIN AND/OR FOLLOW THE ENGINEER'S GUIDANCE WITH RESPECT TO ANY ERRORS, OMISSIONS, INCONSISTENCIES AMBIGUITIES OR CONFLICTS WHICH ARE ALLEGED.

CONTRACTOR TO VERIFY ALL DIMENSIONS AND NOTIFY THE ENGINEER OF ANY DISCREPANCIES BEFORE WORK COMMENCES. DO NOT SCALE DRAWINGS.

ADDITIONAL EROSION AND SEDIMENT CONTROL MEASURES, INCLUDING STRAW BALE BARRIERS AND TEMPORARY CHECK DAMS, SHALL BE INSTALLED WHERE REQUIRED TO INTERCEPT RUNOFF, REDUCE FLOW VELOCITIES, PROMOTE SEDIMENT SETTLEMENT, AND PROTECT DOWNSTREAM DRAINAGE SYSTEMS AND RECEIVING AREAS. THE TYPE, LOCATION, AND EXTENT OF THESE MEASURES SHALL BE ADJUSTED AS NECESSARY BASED ON SITE CONDITIONS AND THE PROGRESSION OF CONSTRUCTION ACTIVITIES.

No.	REVISIONS	BY	DATE
03	ISSUED FOR APPROVAL	S.V.	14 OCT. 2026
02	RE-ISSUED FOR APPROVAL	S.V.	13 FEB. 2026
01	ISSUED FOR SPC APPROVAL	S.V.	12 NOV. 2025

LICENSED PROFESSIONAL ENGINEER
V. JOHNSON
100510576
10-14-2026
PROVINCE OF ONTARIO

NOT AUTHENTIC UNLESS SIGNED AND DATED

LRL
ENGINEERING | INGÉNIERIE
5430 Canotek Road I Ottawa, ON, K1J 9G2
www.lrl.ca I (613) 842-3434

CLIENT
THEIA PARTNERS

DESIGNED BY:	DRAWN BY:	APPROVED BY:
S.V.	S.V.	V.J.

PROJECT
30 CLEARY AVENUE ODAYANHAWAY DEVELOPMENT
30 CLEARY AVENUE, OTTAWA, ON

FILE NO.	PLAN NO.
D07-12-25-0149	19403

DRAWING TITLE
PLAN AND PROFILE
PROP WATER SERVICE
STA. 0+000 TO 0+166

PROJECT NO.	
2631617	C501
DATE	
OCTOBER 2026	

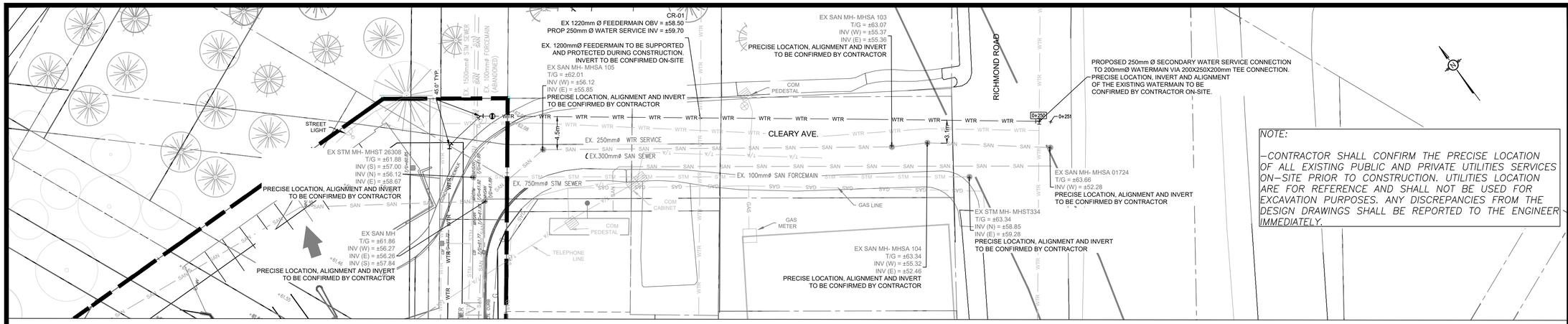

NOTE:

–CONTRACTOR SHALL CONFIRM THE PRECISE LOCATION OF ALL EXISTING PUBLIC AND PRIVATE UTILITIES SERVICES ON–SITE PRIOR TO CONSTRUCTION. UTILITIES LOCATION ARE FOR REFERENCE AND SHALL NOT BE USED FOR EXCAVATION PURPOSES. ANY DISCREPANCIES FROM THE DESIGN DRAWINGS SHALL BE REPORTED TO THE ENGINEER IMMEDIATELY.

H. SCALE: 1:300

5m 2 0 5 10m

SCALE: 1:300

V. SCALE: 1:30

0.5 0 1m

SCALE: 1:30

PROP WATER SERVICE STA. 0+165 TO 0+252

EXISTING CENTERLINE ELEVATION	61.72	61.82	62.00	62.12	62.29	62.72	63.23	63.28	63.44	63.71
PROPOSED TOP OF WATERMAIN	~~59.47~~	59.47	59.51 59.54 59.55	59.64	59.77	59.90	60.05	60.17	60.44	60.71	60.98	61.20

NOTE:

–PROPOSED WATER SERVICE HAS BEEN DESIGNED WITH ASSUMED ELEVATION BASED ON BEST AVAILABLE INFORMATION. DESIGN SUBJECT TO ADJUSTMENT IN THE FIELD PENDING CONFIRMATION OF EXISTING INVERT ELEVATIONS.

– PROFILE OF EXISTING STORM/SANITARY/WATERMAIN SHOWN DIAGRAMMATICALLY BASED ON HISTORICALLY AVAILABLE ELEVATION DATA. ACTUAL INVERT TO BE FIELD CONFIRMED.

–EXISTING GROUND SURFACE ELEVATIONS TO BE CONFIRMED ON–SITE PRIOR TO START OF CONSTRUCTION AND REPORT ANY DISCREPANCIES TO THE ENGINEER.

–CONTRACTOR TO CONFIRM THE PRECISE ALIGNMENT, LOCATION, AND INVERT ELEVATIONS OF ALL EXISTING WATER, STORM, AND SANITARY SERVICES ON–SITE PRIOR TO CONSTRUCTION. ANY DISCREPANCIES FROM THE DESIGN DRAWINGS SHALL BE REPORTED TO THE ENGINEER IMMEDIATELY.

–PROPOSED WATER SERVICE TO BE INSTALLED 2.4m BELOW GROUND SURFACE. PROVIDE INSULATION WHERE SUFFICIENT COVER CAN NOT BE MAINTAINED.

–CONTRACTOR SHALL CARRY OUT ON–FIELD LOCATES TO IDENTIFY PRECISE LOCATION OF EXISTING SUB–SURFACE UTILITIES AND REPORT ANY CONFLICTS BETWEEN PROPOSED AND EXISTING SUB–SURFACE INFRASTRUCTURE.

–THE PROPOSED WATER SERVICE MUST MAINTAIN A MINIMUM HORIZONTAL SEPARATION OF 2.5m FROM ALL ADJACENT SEWERS.
WHERE THIS HORIZONTAL SEPARATION CANNOT BE ACHIEVED, THE WATER SERVICE SHALL BE INSTALLED AT A MINIMUM VERTICAL CLEARANCE OF 0.5m ABOVE THE CROWN OF THE SEWER AT ITS HIGHEST POINT.

USE AND INTERPRETATION OF DRAWINGS

GENERAL CONDITIONS OF THE CONTRACT FOR CONSTRUCTION ARE PART OF THE CONTRACT DOCUMENTS AND DESCRIBE USE AND INTENT OF THE DRAWING. THE CONTRACT DOCUMENTS INCLUDE NOT ONLY THE DRAWINGS, BUT ALSO THE OWNER-CONTRACTOR AGREEMENTS, CONDITIONS OF THE CONTRACT, THE SPECIFICATIONS, ADDENDA, AND MODIFICATIONS ISSUED AFTER EXECUTION OF THE CONTRACT. THESE CONTRACT DOCUMENTS ARE COMPLEMENTARY, AND WHAT IS REQUIRED BY ANY ONE SHALL BE BINDING AS IF REQUIRED BY ALL. WORK NOT COMPLETELY DELINEATED HEREON SHALL BE CONSTRUCTED OF THE SAME MATERIALS AND DETAILED SIMILARLY AS WORK SHOWN MORE COMPLETELY ELSEWHERE IN THE CONTRACT DOCUMENTS.

BY USE OF THE DRAWINGS FOR CONSTRUCTION OF THE PROJECT, THE OWNER CONFIRMS THAT HE HAS REVIEWED AND APPROVED THE DRAWINGS. THE CONTRACTOR CONFIRMS THAT HE HAS VISITED THE SITE, FAMILIARIZED HIMSELF WITH THE LOCAL CONDITIONS, VERIFIED FIELD DIMENSIONS AND CORRELATED HIS OBSERVATIONS WITH THE REQUIREMENTS OF THE CONTRACT DOCUMENTS.

AS INSTRUMENTS OF SERVICE, ALL DRAWINGS, SPECIFICATIONS, CAD FILES OR OTHER ELECTRONIC MEDIA AND COPIED THERE OF FURNISHED BY THE ENGINEER ARE HIS PROPERTY. THEY ARE TO BE USED ONLY FOR THIS PROJECT AND ARE NOT TO BE USED ON ANY OTHER PROJECT, INCLUDING REPEATS OF THE PROJECT. CHANGES TO THE DRAWINGS MAY ONLY BE MADE BY THE ENGINEER.

UNLESS THE REVISION TITLE IS "ISSUED FOR CONSTRUCTION", THESE DRAWINGS SHALL BE CONSIDERED PRELIMINARY AND SHALL NOT BE USED AS A CONSTRUCTION DOCUMENT.

THESE DRAWINGS ILLUSTRATES THE WORK TO BE DONE. THE ENGINEER IS NOT RESPONSIBLE FOR THE MEANS, METHODS, TECHNIQUES, SEQUENCES, AND PROCEDURES USED TO DO THE WORK, OR THE SAFETY ASPECTS OF CONSTRUCTION, AND NOTHING ON THESE DRAWINGS EXPRESSED OR IMPLIED CHANGES THIS CONDITION. CONTRACTOR SHALL DETERMINE ALL CONDITIONS AT THE SITE AND SHALL BE RESPONSIBLE FOR KNOWING HOW THEY AFFECT THE WORK. SUBMITTAL OF A BID TO PERFORM THIS WORK IS ACKNOWLEDGEMENT OF THE RESPONSIBILITIES, AND THAT THEY HAVE BEEN FULLY CONSIDERED IN PLANNING OF THE WORK, AND THE BID PRICE. NO CLAIMS FOR EXTRA CHANGES DUE TO THESE CONDITIONS WILL BE FORTHCOMING.

UNAUTHORIZED CHANGES:

IN THE EVENT THE CLIENT, THE CLIENT'S CONTRACTORS OR SUBCONTRACTORS, OR ANYONE FOR WHOM THE CLIENT IS LEGALLY LIABLE MAKES OR PERMITS TO BE MADE ANY CHANGES TO ANY REPORTS, PLANS, SPECIFICATIONS OR OTHER CONSTRUCTION DOCUMENTS PREPARED BY LRL ASSOCIATES LTD. (LRL) WITHOUT OBTAINING LRL'S PRIOR WRITTEN CONSENT, THE CLIENT SHALL ASSUME FULL RESPONSIBILITY FOR THE RESULTS OF SUCH CHANGES, THEREFORE THE CLIENT AGREES TO WAIVE ANY CLAIM AGAINST LRL AND TO RELEASE LRL FROM ANY LIABILITY ARISING DIRECTLY OR INDIRECTLY FROM SUCH UNAUTHORIZED CHANGES.

IN ADDITION, THE CLIENT AGREES, TO THE FULLEST EXTENT PERMITTED BY LAW, TO INDEMNIFY AND HOLD HARMLESS LRL FROM ANY DAMAGES, LIABILITIES OR COST, INCLUDING REASONABLE ATTORNEY'S FEES AND COST OF DEFENSE, ARISING FROM SUCH CHANGES.

IN ADDITION, THE CLIENT AGREES TO INCLUDE IN ANY CONTRACTS FOR CONSTRUCTION APPROPRIATE LANGUAGE THAT PROHIBITS THE CONTRACTOR OR ANY SUBCONTRACTORS OF ANY TIER FROM MAKING ANY CHANGES OR MODIFICATIONS TO LRL'S CONSTRUCTION DOCUMENTS WITHOUT THE PRIOR WRITTEN APPROVAL OF LRL AND THAT FURTHER REQUIRES THE CONTRACTOR TO INDEMNIFY BOTH LRL AND THE CLIENT FROM ANY LIABILITY OR COST ARISING FROM SUCH CHANGES MADE WITHOUT SUCH PROPER AUTHORIZATION.

GENERAL NOTES:

EXISTING SERVICES AND UTILITIES SHOWN ON THESE DRAWINGS ARE TAKEN FROM THE BEST AVAILABE RECORDS, BUT MAY NOT BE COMPLETE OR TO DATE. CONTRACTOR SHALL VERIFY IN FIELD FOR LOCATION AND ELEVATION OF PIPES AND CHECK WITH THE UTILITY COMPANIES BEFORE DIGGING OR PERFORMING WORK.

CONTRACTOR IS ADVISED TO COLLECT INFORMATION ON SOIL CONDITIONS BEFORE START OF CONSTRUCTION.

THE ENGINEER WAIVES ANY AND ALL RESPONSIBILITY AND LIABILITY FOR PROBLEMS WHICH ARISE FROM FAILURE TO FOLLOW THESE PLANS, SPECIFICATIONS AND THE DESIGN INTENT THEY CONVEY, OR FOR PROBLEMS WHICH ARISE FROM OTHERS' FAILURE TO OBTAIN AND/OR FOLLOW THE ENGINEER'S GUIDANCE WITH RESPECT TO ANY ERRORS, OMISSIONS, INCONSISTENCIES AMBIGUITIES OR CONFLICTS WHICH ARE ALLEGED.

CONTRACTOR TO VERIFY ALL DIMENSIONS AND NOTIFY THE ENGINEER OF ANY DISCREPANCIES BEFORE WORK COMMENCES. DO NOT SCALE DRAWINGS.

ADDITIONAL EROSION AND SEDIMENT CONTROL MEASURES, INCLUDING STRAW BALE BARRIERS AND TEMPORARY CHECK DAMS, SHALL BE INSTALLED WHERE REQUIRED TO INTERCEPT RUNOFF, REDUCE FLOW VELOCITIES, PROMOTE SEDIMENT SETTLEMENT, AND PROTECT DOWNSTREAM DRAINAGE SYSTEMS AND RECEIVING AREAS. THE TYPE, LOCATION, AND EXTENT OF THESE MEASURES SHALL BE ADJUSTED AS NECESSARY BASED ON SITE CONDITIONS AND THE PROGRESSION OF CONSTRUCTION ACTIVITIES.

No.	REVISIONS	BY	DATE
03	ISSUED FOR APPROVAL	S.V.	14 OCT. 2026
02	RE-ISSUED FOR APPROVAL	S.V.	13 FEB. 2026
01	ISSUED FOR SPC APPROVAL	S.V.	12 NOV. 2025

LICENSED PROFESSIONAL ENGINEER
V. JOHNSON
100510576
10-14-2026
PROVINCE OF ONTARIO

NOT AUTHENTIC UNLESS SIGNED AND DATED

LRL
ENGINEERING | INGÉNIERIE
5430 Canotek Road I Ottawa, ON, K1J 9G2
www.lrl.ca I (613) 842-3434

CLIENT
THEIA PARTNERS

DESIGNED BY:	DRAWN BY:	APPROVED BY:
S.V.	S.V.	V.J.

PROJECT
30 CLEARY AVENUE ODAYANHAWAY DEVELOPMENT
30 CLEARY AVENUE, OTTAWA, ON

FILE NO. D07-12-25-0149
PLAN NO. 19403

DRAWING TITLE
PLAN AND PROFILE
PROP WATER SERVICE
STA. 0+165 TO 0+252

PROJECT NO. 2631617
DATE OCTOBER 2026

C502

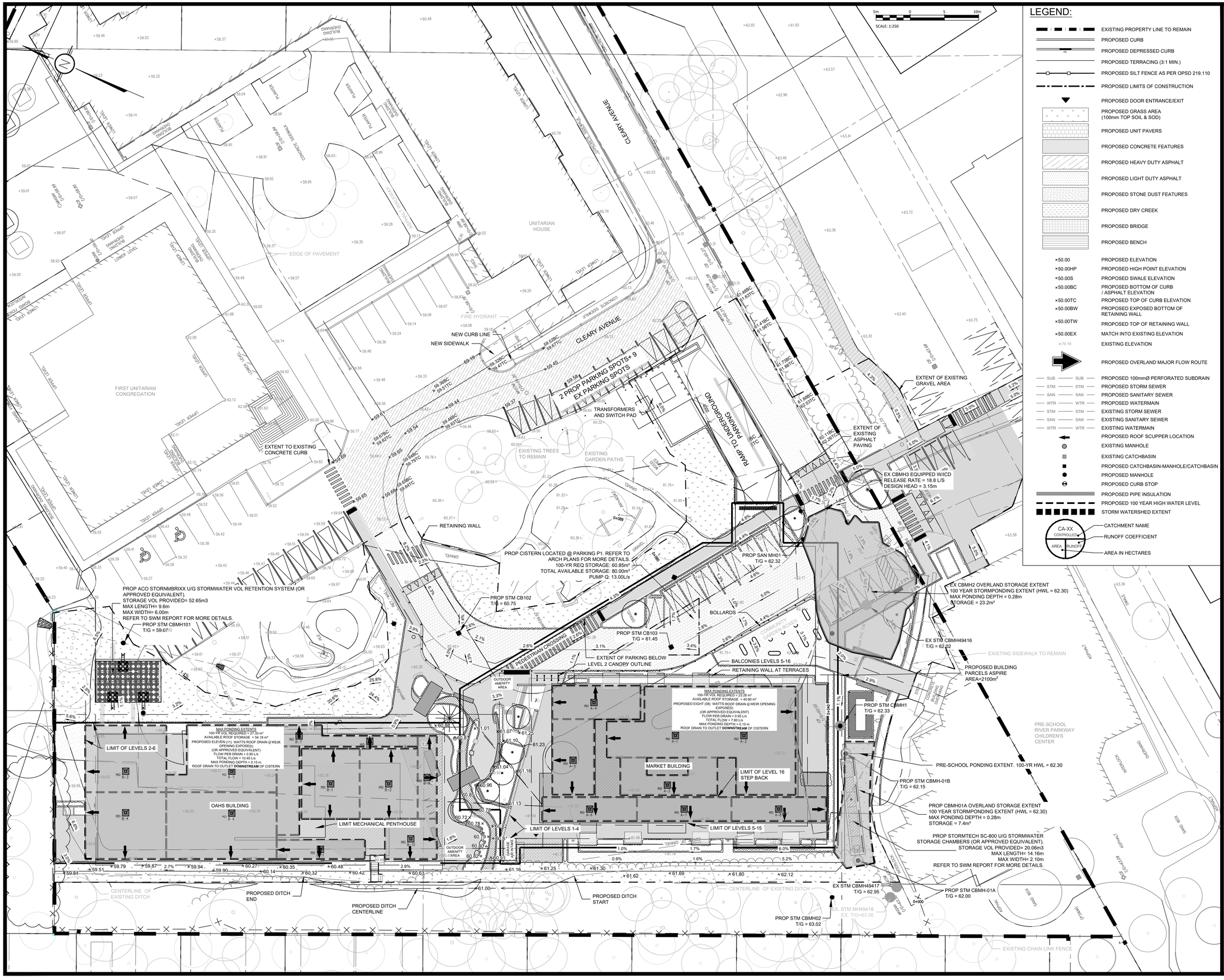

LEGEND:

- EXISTING PROPERTY LINE TO REMAIN
- PROPOSED CURB
- PROPOSED DEPRESSED CURB
- PROPOSED TERRACING (3:1 MIN.)
- PROPOSED SILT FENCE AS PER OPSD 219.110
- PROPOSED LIMITS OF CONSTRUCTION
- PROPOSED DOOR ENTRANCE/EXIT
- PROPOSED GRASS AREA (100mm TOP SOIL & SOD)
- PROPOSED UNIT PAVERS
- PROPOSED CONCRETE FEATURES
- PROPOSED HEAVY DUTY ASPHALT
- PROPOSED LIGHT DUTY ASPHALT
- PROPOSED STONE DUST FEATURES
- PROPOSED DRY CREEK
- PROPOSED BRIDGE
- PROPOSED BENCH
- ×50.00 PROPOSED ELEVATION
- ×50.00HP PROPOSED HIGH POINT ELEVATION
- ×50.00S PROPOSED SWALE ELEVATION
- ×50.00BC PROPOSED BOTTOM OF CURB / ASPHALT ELEVATION
- ×50.00TC PROPOSED TOP OF CURB ELEVATION
- ×50.00BW PROPOSED EXPOSED BOTTOM OF RETAINING WALL
- ×50.00TW PROPOSED TOP OF RETAINING WALL
- ×50.00EX MATCH INTO EXISTING ELEVATION
- ×70.19 EXISTING ELEVATION
- PROPOSED OVERLAND MAJOR FLOW ROUTE
- SUB PROPOSED 100mmØ PERFORATED SUBDRAIN
- STM PROPOSED STORM SEWER
- SAN PROPOSED SANITARY SEWER
- WTR PROPOSED WATERMAIN
- STM EXISTING STORM SEWER
- SAN EXISTING SANITARY SEWER
- WTR EXISTING WATERMAIN
- PROPOSED ROOF SCUPPER LOCATION
- EXISTING MANHOLE
- EXISTING CATCHBASIN
- PROPOSED CATCHBASIN-MANHOLE/CATCHBASIN
- PROPOSED MANHOLE
- PROPOSED CURB STOP
- PROPOSED PIPE INSULATION
- PROPOSED 100 YEAR HIGH WATER LEVEL
- STORM WATERSHED EXTENT
- CA-XX (CONTROLLER) — CATCHMENT NAME
- RUNOFF COEFFICIENT
- AREA (AREA) IN HECTARES

USE AND INTERPRETATION OF DRAWINGS

GENERAL CONDITIONS OF THE CONTRACT FOR CONSTRUCTION ARE PART OF THE CONTRACT DOCUMENTS AND DESCRIBE USE AND INTENT OF THE DRAWING. THE CONTRACT DOCUMENTS INCLUDE NOT ONLY THE DRAWINGS, BUT ALSO THE OWNER-CONTRACTOR AGREEMENTS, CONDITIONS OF THE CONTRACT, THE SPECIFICATIONS, ADDENDA, AND MODIFICATIONS ISSUED AFTER EXECUTION OF THE CONTRACT. THESE CONTRACT DOCUMENTS ARE COMPLEMENTARY, AND WHAT IS REQUIRED BY ANY ONE SHALL BE BINDING AS IF REQUIRED BY ALL. WORK NOT COMPLETELY DELINEATED HEREON SHALL BE CONSTRUCTED OF THE SAME MATERIALS AND DETAILED SIMILARLY AS WORK SHOWN MORE COMPLETELY ELSEWHERE IN THE CONTRACT DOCUMENTS.

BY USE OF THE DRAWINGS FOR CONSTRUCTION OF THE PROJECT, THE OWNER CONFIRMS THAT HE HAS REVIEWED AND APPROVED THE DRAWINGS. THE CONTRACTOR CONFIRMS THAT HE HAS VISITED THE SITE, FAMILIARIZED HIMSELF WITH THE LOCAL CONDITIONS, VERIFIED FIELD DIMENSIONS AND CORRELATED HIS OBSERVATIONS WITH THE REQUIREMENTS OF THE CONTRACT DOCUMENTS.

AS INSTRUMENTS OF SERVICE, ALL DRAWINGS, SPECIFICATIONS, CAD FILES OR OTHER ELECTRONIC MEDIA AND COPIED THERE OF FURNISHED BY THE ENGINEER ARE HIS PROPERTY. THEY ARE TO BE USED ONLY FOR THIS PROJECT AND ARE NOT TO BE USED ON ANY OTHER PROJECT, INCLUDING REPEATS OF THE PROJECT. CHANGES TO THE DRAWINGS MAY ONLY BE MADE BY THE ENGINEER.

UNLESS THE REVISION TITLE IS "ISSUED FOR CONSTRUCTION", THESE DRAWINGS SHALL BE CONSIDERED PRELIMINARY AND SHALL NOT BE USED AS A CONSTRUCTION DOCUMENT.

THESE DRAWINGS ILLUSTRATES THE WORK TO BE DONE. THE ENGINEER IS NOT RESPONSIBLE FOR THE MEANS, METHODS, TECHNIQUES, SEQUENCES, AND PROCEDURES USED TO DO THE WORK, OR THE SAFETY ASPECTS OF CONSTRUCTION, AND NOTHING ON THESE DRAWINGS EXPRESSED OR IMPLIED CHANGES THIS CONDITION. CONTRACTOR SHALL DETERMINE ALL CONDITIONS AT THE SITE AND SHALL BE RESPONSIBLE FOR KNOWING HOW THEY AFFECT THE WORK. SUBMITTAL OF A BID TO PERFORM THIS WORK IS ACKNOWLEDGEMENT OF THE RESPONSIBILITIES, AND THAT THEY HAVE BEEN FULLY CONSIDERED IN PLANNING OF THE WORK, AND THE BID PRICE. NO CLAIMS FOR EXTRA CHANGES DUE TO THESE CONDITIONS WILL BE FORTHCOMING.

UNAUTHORIZED CHANGES:

IN THE EVENT THE CLIENT, THE CLIENT'S CONTRACTORS OR SUBCONTRACTORS, OR ANYONE FOR WHOM THE CLIENT IS LEGALLY LIABLE MAKES OR PERMITS TO BE MADE ANY CHANGES TO ANY REPORTS, PLANS, SPECIFICATIONS OR OTHER CONSTRUCTION DOCUMENTS PREPARED BY LRL ASSOCIATES LTD. (LRL) WITHOUT OBTAINING LRL'S PRIOR WRITTEN CONSENT, THE CLIENT SHALL ASSUME FULL RESPONSIBILITY FOR THE RESULTS OF SUCH CHANGES, THEREFORE THE CLIENT AGREES TO WAIVE ANY CLAIM AGAINST LRL AND TO RELEASE LRL FROM ANY LIABILITY ARISING DIRECTLY OR INDIRECTLY FROM SUCH UNAUTHORIZED CHANGES.

IN ADDITION, THE CLIENT AGREES, TO THE FULLEST EXTENT PERMITTED BY LAW, TO INDEMNIFY AND HOLD HARMLESS LRL FROM ANY DAMAGES, LIABILITIES OR COST, INCLUDING REASONABLE ATTORNEY'S FEES AND COST OF DEFENSE, ARISING FROM SUCH CHANGES.

IN ADDITION, THE CLIENT AGREES TO INCLUDE IN ANY CONTRACTS FOR CONSTRUCTION APPROPRIATE LANGUAGE THAT PROHIBITS THE CONTRACTOR OR ANY SUBCONTRACTORS OF ANY TIER FROM MAKING ANY CHANGES OR MODIFICATIONS TO LRL'S CONSTRUCTION DOCUMENTS WITHOUT THE PRIOR WRITTEN APPROVAL OF LRL AND THAT FURTHER REQUIRES THE CONTRACTOR TO INDEMNIFY BOTH LRL AND THE CLIENT FROM ANY LIABILITY OR COST ARISING FROM SUCH CHANGES MADE WITHOUT SUCH PROPER AUTHORIZATION.

GENERAL NOTES:

EXISTING SERVICES AND UTILITIES SHOWN ON THESE DRAWINGS ARE TAKEN FROM THE BEST AVAILABLE RECORDS, BUT MAY NOT BE COMPLETE OR TO DATE. CONTRACTOR SHALL VERIFY IN FIELD FOR LOCATION AND ELEVATION OF PIPES AND CHECK WITH THE UTILITY COMPANIES BEFORE DIGGING OR PERFORMING WORK.

CONTRACTOR IS ADVISED TO COLLECT INFORMATION ON SOIL CONDITIONS BEFORE START OF CONSTRUCTION.

THE ENGINEER WAIVES ANY AND ALL RESPONSIBILITY AND LIABILITY FOR PROBLEMS WHICH ARISE FROM FAILURE TO FOLLOW THESE PLANS, SPECIFICATIONS AND THE DESIGN INTENT THEY CONVEY, OR FOR PROBLEMS WHICH ARISE FROM OTHERS' FAILURE TO OBTAIN AND/OR FOLLOW THE ENGINEER'S GUIDANCE WITH RESPECT TO ANY ERRORS, OMISSIONS, INCONSISTENCIES AMBIGUITIES OR CONFLICTS WHICH ARE ALLEGED.

CONTRACTOR TO VERIFY ALL DIMENSIONS AND NOTIFY THE ENGINEER OF ANY DISCREPANCIES BEFORE WORK COMMENCES. DO NOT SCALE DRAWINGS.

ADDITIONAL EROSION AND SEDIMENT CONTROL MEASURES, INCLUDING STRAW BALE BARRIERS AND TEMPORARY CHECK DAMS, SHALL BE INSTALLED WHERE REQUIRED TO INTERCEPT RUNOFF, REDUCE FLOW VELOCITIES, PROMOTE SEDIMENT SETTLEMENT, AND PROTECT DOWNSTREAM DRAINAGE SYSTEMS AND RECEIVING AREAS. THE TYPE, LOCATION, AND EXTENT OF THESE MEASURES SHALL BE ADJUSTED AS NECESSARY BASED ON SITE CONDITIONS AND THE PROGRESSION OF CONSTRUCTION ACTIVITIES.

No.	REVISIONS	BY	DATE
03	ISSUED FOR APPROVAL	S.V.	14 OCT. 2026
02	RE-ISSUED FOR APPROVAL	S.V.	13 FEB. 2026
01	ISSUED FOR SPC APPROVAL	S.V.	12 NOV. 2025

LICENSED PROFESSIONAL ENGINEER
V. JOHNSON
100510576
10-14-2026
PROVINCE OF ONTARIO

NOT AUTHENTIC UNLESS SIGNED AND DATED

LRL
ENGINEERING | INGÉNIERIE
5430 Canotek Road | Ottawa, ON, K1J 9G2
www.lrl.ca | (613) 842-3434

CLIENT
THEIA PARTNERS

DESIGNED BY:	DRAWN BY:	APPROVED BY:
S.V.	S.V.	V.J.

PROJECT
30 CLEARY AVENUE ODAYANHAWAY DEVELOPMENT
30 CLEARY AVENUE, OTTAWA, ON

FILE NO.	PLAN NO.
D07-12-25-0149	19403

DRAWING TITLE
STORMWATER MANAGEMENT PLAN

PROJECT NO.
2631617

DATE
OCTOBER 2026

C601

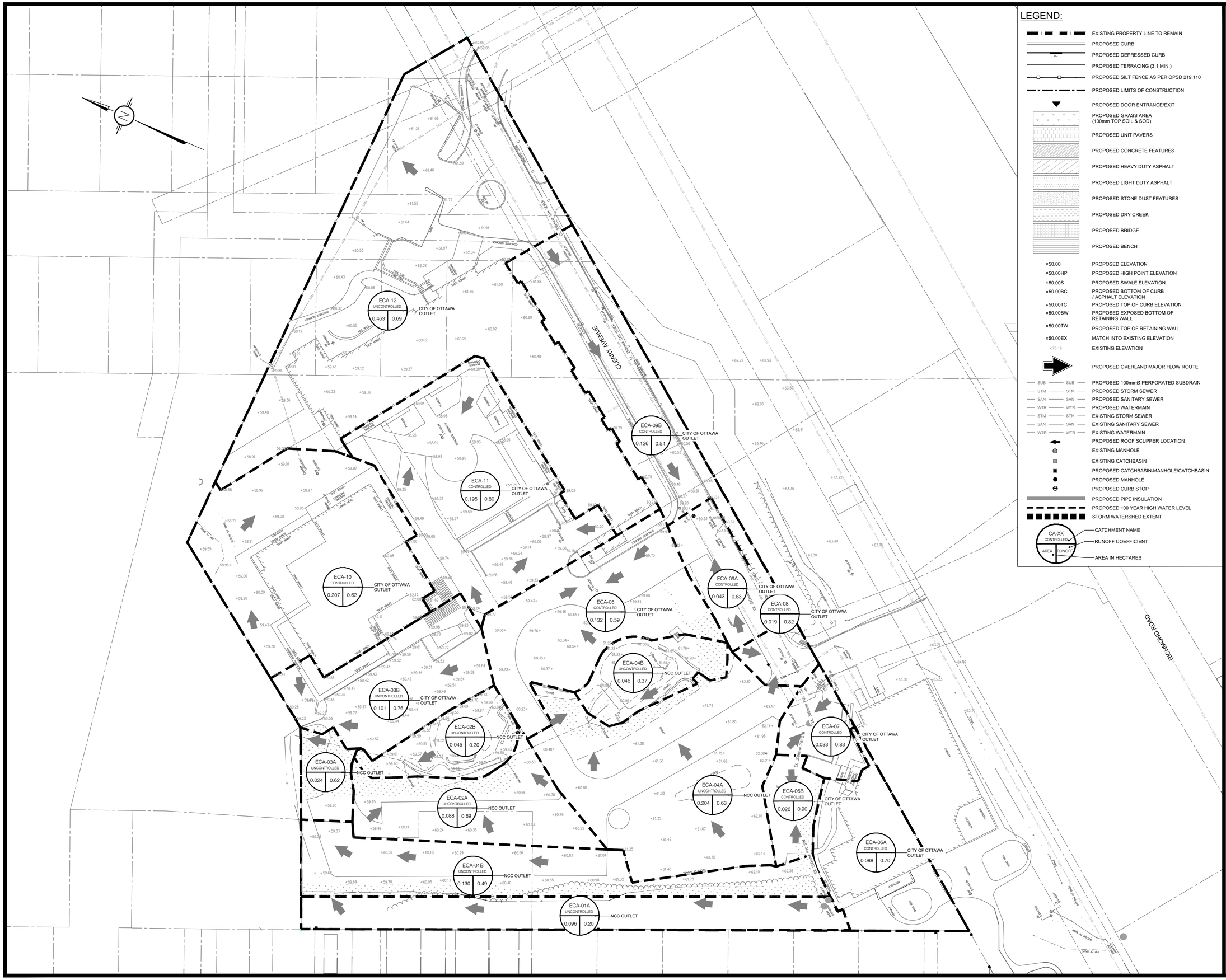

LEGEND:

- EXISTING PROPERTY LINE TO REMAIN
- PROPOSED CURB
- PROPOSED DEPRESSED CURB
- PROPOSED TERRACING (3:1 MIN.)
- PROPOSED SILT FENCE AS PER OPSD 219.110
- PROPOSED LIMITS OF CONSTRUCTION
- PROPOSED DOOR ENTRANCE/EXIT
- PROPOSED GRASS AREA (100mm TOP SOIL & SOD)
- PROPOSED UNIT PAVERS
- PROPOSED CONCRETE FEATURES
- PROPOSED HEAVY DUTY ASPHALT
- PROPOSED LIGHT DUTY ASPHALT
- PROPOSED STONE DUST FEATURES
- PROPOSED DRY CREEK
- PROPOSED BRIDGE
- PROPOSED BENCH
- ×50.00 PROPOSED ELEVATION
- ×50.00HP PROPOSED HIGH POINT ELEVATION
- ×50.00S PROPOSED SWALE ELEVATION
- ×50.00BC PROPOSED BOTTOM OF CURB / ASPHALT ELEVATION
- ×50.00TC PROPOSED TOP OF CURB ELEVATION
- ×50.00BW PROPOSED EXPOSED BOTTOM OF RETAINING WALL
- ×50.00TW PROPOSED TOP OF RETAINING WALL
- ×50.00EX MATCH INTO EXISTING ELEVATION
- ×70.19 EXISTING ELEVATION
- PROPOSED OVERLAND MAJOR FLOW ROUTE
- SUB SUB PROPOSED 100mmØ PERFORATED SUBDRAIN
- STM STM PROPOSED STORM SEWER
- SAN SAN PROPOSED SANITARY SEWER
- WTR WTR PROPOSED WATERMAIN
- STM STM EXISTING STORM SEWER
- SAN SAN EXISTING SANITARY SEWER
- WTR WTR EXISTING WATERMAIN
- PROPOSED ROOF SCUPPER LOCATION
- EXISTING MANHOLE
- EXISTING CATCHBASIN
- PROPOSED CATCHBASIN-MANHOLE/CATCHBASIN
- PROPOSED MANHOLE
- PROPOSED CURB STOP
- PROPOSED PIPE INSULATION
- PROPOSED 100 YEAR HIGH WATER LEVEL
- STORM WATERSHED EXTENT
- CA-XX CONTROLLED / AREA / RUNOFF — CATCHMENT NAME / RUNOFF COEFFICIENT / AREA IN HECTARES

USE AND INTERPRETATION OF DRAWINGS

GENERAL CONDITIONS OF THE CONTRACT FOR CONSTRUCTION ARE PART OF THE CONTRACT DOCUMENTS AND DESCRIBE USE AND INTENT OF THE DRAWING. THE CONTRACT DOCUMENTS INCLUDE NOT ONLY THE DRAWINGS, BUT ALSO THE OWNER-CONTRACTOR AGREEMENTS, CONDITIONS OF THE CONTRACT, THE SPECIFICATIONS, ADDENDA, AND MODIFICATIONS ISSUED AFTER EXECUTION OF THE CONTRACT. THESE CONTRACT DOCUMENTS ARE COMPLEMENTARY, AND WHAT IS REQUIRED BY ANY ONE SHALL BE BINDING AS IF REQUIRED BY ALL. WORK NOT COMPLETELY DELINEATED HEREON SHALL BE CONSTRUCTED OF THE SAME MATERIALS AND DETAILED SIMILARLY AS WORK SHOWN MORE COMPLETELY ELSEWHERE IN THE CONTRACT DOCUMENTS.

BY USE OF THE DRAWINGS FOR CONSTRUCTION OF THE PROJECT, THE OWNER CONFIRMS THAT HE HAS REVIEWED AND APPROVED THE DRAWINGS. THE CONTRACTOR CONFIRMS THAT HE HAS VISITED THE SITE, FAMILIARIZED HIMSELF WITH THE LOCAL CONDITIONS, VERIFIED FIELD DIMENSIONS AND CORRELATED HIS OBSERVATIONS WITH THE REQUIREMENTS OF THE CONTRACT DOCUMENTS.

AS INSTRUMENTS OF SERVICE, ALL DRAWINGS, SPECIFICATIONS, CAD FILES OR OTHER ELECTRONIC MEDIA AND COPIED THERE OF FURNISHED BY THE ENGINEER ARE HIS PROPERTY. THEY ARE TO BE USED ONLY FOR THIS PROJECT AND ARE NOT TO BE USED ON ANY OTHER PROJECT, INCLUDING REPEATS OF THE PROJECT. CHANGES TO THE DRAWINGS MAY ONLY BE MADE BY THE ENGINEER.

UNLESS THE REVISION TITLE IS "ISSUED FOR CONSTRUCTION", THESE DRAWINGS SHALL BE CONSIDERED PRELIMINARY AND SHALL NOT BE USED AS A CONSTRUCTION DOCUMENT.

THESE DRAWINGS ILLUSTRATES THE WORK TO BE DONE. THE ENGINEER IS NOT RESPONSIBLE FOR THE MEANS, METHODS, TECHNIQUES, SEQUENCES, AND PROCEDURES USED TO DO THE WORK, OR THE SAFETY ASPECTS OF CONSTRUCTION, AND NOTHING ON THESE DRAWINGS EXPRESSED OR IMPLIED CHANGES THIS CONDITION. CONTRACTOR SHALL DETERMINE ALL CONDITIONS AT THE SITE AND SHALL BE RESPONSIBLE FOR KNOWING HOW THEY AFFECT THE WORK. SUBMITTAL OF A BID TO PERFORM THIS WORK IS ACKNOWLEDGEMENT OF THE RESPONSIBILITIES, AND THAT THEY HAVE BEEN FULLY CONSIDERED IN PLANNING OF THE WORK, AND THE BID PRICE. NO CLAIMS FOR EXTRA CHANGES DUE TO THESE CONDITIONS WILL BE FORTHCOMING.

UNAUTHORIZED CHANGES:

IN THE EVENT THE CLIENT, THE CLIENT'S CONTRACTORS OR SUBCONTRACTORS, OR ANYONE FOR WHOM THE CLIENT IS LEGALLY LIABLE MAKES OR PERMITS TO BE MADE ANY CHANGES TO ANY REPORTS, PLANS, SPECIFICATIONS OR OTHER CONSTRUCTION DOCUMENTS PREPARED BY LRL ASSOCIATES LTD. (LRL) WITHOUT OBTAINING LRL'S PRIOR WRITTEN CONSENT, THE CLIENT SHALL ASSUME FULL RESPONSIBILITY FOR THE RESULTS OF SUCH CHANGES, THEREFORE THE CLIENT AGREES TO WAIVE ANY CLAIM AGAINST LRL AND TO RELEASE LRL FROM ANY LIABILITY ARISING DIRECTLY OR INDIRECTLY FROM SUCH UNAUTHORIZED CHANGES.

IN ADDITION, THE CLIENT AGREES, TO THE FULLEST EXTENT PERMITTED BY LAW, TO INDEMNIFY AND HOLD HARMLESS LRL FROM ANY DAMAGES, LIABILITIES OR COST, INCLUDING REASONABLE ATTORNEY'S FEES AND COST OF DEFENSE, ARISING FROM SUCH CHANGES.

IN ADDITION, THE CLIENT AGREES TO INCLUDE IN ANY CONTRACTS FOR CONSTRUCTION APPROPRIATE LANGUAGE THAT PROHIBITS THE CONTRACTOR OR ANY SUBCONTRACTORS OF ANY TIER FROM MAKING ANY CHANGES OR MODIFICATIONS TO LRL'S CONSTRUCTION DOCUMENTS WITHOUT THE PRIOR WRITTEN APPROVAL OF LRL AND THAT FURTHER REQUIRES THE CONTRACTOR TO INDEMNIFY BOTH LRL AND THE CLIENT FROM ANY LIABILITY OR COST ARISING FROM SUCH CHANGES MADE WITHOUT SUCH PROPER AUTHORIZATION.

GENERAL NOTES:

EXISTING SERVICES AND UTILITIES SHOWN ON THESE DRAWINGS ARE TAKEN FROM THE BEST AVAILABLE RECORDS, BUT MAY NOT BE COMPLETE OR TO DATE. CONTRACTOR SHALL VERIFY IN FIELD FOR LOCATION AND ELEVATION OF PIPES AND CHECK WITH THE UTILITY COMPANIES BEFORE DIGGING OR PERFORMING WORK.

CONTRACTOR IS ADVISED TO COLLECT INFORMATION ON SOIL CONDITIONS BEFORE START OF CONSTRUCTION.

THE ENGINEER WAIVES ANY AND ALL RESPONSIBILITY AND LIABILITY FOR PROBLEMS WHICH ARISE FROM FAILURE TO FOLLOW THESE PLANS, SPECIFICATIONS AND THE DESIGN INTENT THEY CONVEY, OR FOR PROBLEMS WHICH ARISE FROM OTHERS' FAILURE TO OBTAIN AND/OR FOLLOW THE ENGINEER'S GUIDANCE WITH RESPECT TO ANY ERRORS, OMISSIONS, INCONSISTENCIES AMBIGUITIES OR CONFLICTS WHICH ARE ALLEGED.

CONTRACTOR TO VERIFY ALL DIMENSIONS AND NOTIFY THE ENGINEER OF ANY DISCREPANCIES BEFORE WORK COMMENCES. DO NOT SCALE DRAWINGS.

ADDITIONAL EROSION AND SEDIMENT CONTROL MEASURES, INCLUDING STRAW BALE BARRIERS AND TEMPORARY CHECK DAMS, SHALL BE INSTALLED WHERE REQUIRED TO INTERCEPT RUNOFF, REDUCE FLOW VELOCITIES, PROMOTE SEDIMENT SETTLEMENT, AND PROTECT DOWNSTREAM DRAINAGE SYSTEMS AND RECEIVING AREAS. THE TYPE, LOCATION, AND EXTENT OF THESE MEASURES SHALL BE ADJUSTED AS NECESSARY BASED ON SITE CONDITIONS AND THE PROGRESSION OF CONSTRUCTION ACTIVITIES.

5m 0 10 20m

SCALE: 1:400

No.	REVISIONS	BY	DATE
03	ISSUED FOR APPROVAL	S.V.	14 OCT. 2026
02	RE-ISSUED FOR APPROVAL	S.V.	13 FEB. 2026
01	ISSUED FOR SPC APPROVAL	S.V.	12 NOV. 2025

LICENSED PROFESSIONAL ENGINEER
V. JOHNSON
100510576
10-14-2026
PROVINCE OF ONTARIO

NOT AUTHENTIC UNLESS SIGNED AND DATED

LRL
ENGINEERING | INGÉNIERIE
5430 Canotek Road | Ottawa, ON, K1J 9G2
www.lrl.ca | (613) 842-3434

CLIENT

THEIA PARTNERS

DESIGNED BY:	DRAWN BY:	APPROVED BY:
S.V.	S.V.	V.J.

PROJECT

30 CLEARY AVENUE ODAYANHAWAY DEVELOPMENT
30 CLEARY AVENUE, OTTAWA, ON

FILE NO.	PLAN NO.
D07-12-25-0149	19403

DRAWING TITLE

PRE-DEVELOPMENT WATERSHED PLAN

PROJECT NO.
2631617

DATE
OCTOBER 2026

C701

5m 0 10 20m

SCALE: 1:400

ROOF DRAIN SUMMARY TABLE					
DRAIN ID	CA-02A Roof-Controlled (Market Bldg)	CA-02B Roof-Controlled (Market Bldg)	CA-02C Roof-Controlled (Market Bldg)	CA-03A Roof-Controlled (OASH Bldg)	CA-03A Roof-Controlled (OASH Bldg)
CONFIGURATION NUMBER OF ROOF DRAINS	3	2	3	2	9
CONFIGURATION ROOF DRAIN MODEL	WATTS Roof Drain - ¼ Weir Opening Exposed	WATTS Roof Drain - ¼ Weir Opening Exposed	WATTS Roof Drain - ¼ Weir Opening Exposed	WATTS Roof Drain - ¼ Weir Opening Exposed	WATTS Roof Drain - ¼ Weir Opening Exposed
RELEASE RATE	2.85L/s	1.90L/s	2.85L/s	1.90L/s	8.55L/s
STORAGE REQUIRED	16.12m³	3.32m³	3.83m³	7.38m³	19.95m³
STORAGE PROVIDED	23.60m³	9.02m³	7.98m³	11.02m³	43.16m³
PONDING DEPTH	150mm	150mm	150 mm	150 mm	150 mm

LEGEND:

- EXISTING PROPERTY LINE TO REMAIN
- PROPOSED CURB
- PROPOSED DEPRESSED CURB
- PROPOSED TERRACING (3:1 MIN.)
- PROPOSED SILT FENCE AS PER OPSD 219.110
- PROPOSED LIMITS OF CONSTRUCTION
- PROPOSED DOOR ENTRANCE/EXIT
- PROPOSED GRASS AREA (100mm TOP SOIL & SOD)
- PROPOSED UNIT PAVERS
- PROPOSED CONCRETE FEATURES
- PROPOSED HEAVY DUTY ASPHALT
- PROPOSED LIGHT DUTY ASPHALT
- PROPOSED STONE DUST FEATURES
- PROPOSED DRY CREEK
- PROPOSED BRIDGE
- PROPOSED BENCH
- ×50.00 PROPOSED ELEVATION
- ×50.00HP PROPOSED HIGH POINT ELEVATION
- ×50.00S PROPOSED SWALE ELEVATION
- ×50.00BC PROPOSED BOTTOM OF CURB / ASPHALT ELEVATION
- ×50.00TC PROPOSED TOP OF CURB ELEVATION
- ×50.00BW PROPOSED EXPOSED BOTTOM OF RETAINING WALL
- ×50.00TW PROPOSED TOP OF RETAINING WALL
- ×50.00EX MATCH INTO EXISTING ELEVATION
- ×70.19 EXISTING ELEVATION
- PROPOSED OVERLAND MAJOR FLOW ROUTE
- SUB SUB PROPOSED 100mmØ PERFORATED SUBDRAIN
- STM STM PROPOSED STORM SEWER
- SAN SAN PROPOSED SANITARY SEWER
- WTR WTR PROPOSED WATERMAIN
- STM STM EXISTING STORM SEWER
- SAN SAN EXISTING SANITARY SEWER
- WTR WTR EXISTING WATERMAIN
- PROPOSED ROOF SCUPPER LOCATION
- EXISTING MANHOLE
- EXISTING CATCHBASIN
- PROPOSED CATCHBASIN-MANHOLE/CATCHBASIN
- PROPOSED MANHOLE
- PROPOSED CURB STOP
- PROPOSED PIPE INSULATION
- PROPOSED 100 YEAR HIGH WATER LEVEL
- STORM WATERSHED EXTENT
- CA-XX CONTROLLED AREA RUNOFF — CATCHMENT NAME, RUNOFF COEFFICIENT, AREA IN HECTARES

USE AND INTERPRETATION OF DRAWINGS

GENERAL CONDITIONS OF THE CONTRACT FOR CONSTRUCTION ARE PART OF THE CONTRACT DOCUMENTS AND DESCRIBE USE AND INTENT OF THE DRAWING. THE CONTRACT DOCUMENTS INCLUDE NOT ONLY THE DRAWINGS, BUT ALSO THE OWNER-CONTRACTOR AGREEMENTS, CONDITIONS OF THE CONTRACT, THE SPECIFICATIONS, ADDENDA, AND MODIFICATIONS ISSUED AFTER EXECUTION OF THE CONTRACT. THESE CONTRACT DOCUMENTS ARE COMPLEMENTARY, AND WHAT IS REQUIRED BY ANY ONE SHALL BE BINDING AS IF REQUIRED BY ALL. WORK NOT COMPLETELY DELINEATED HEREON SHALL BE CONSTRUCTED OF THE SAME MATERIALS AND DETAILED SIMILARLY AS WORK SHOWN MORE COMPLETELY ELSEWHERE IN THE CONTRACT DOCUMENTS.

BY USE OF THE DRAWINGS FOR CONSTRUCTION OF THE PROJECT, THE OWNER CONFIRMS THAT HE HAS REVIEWED AND APPROVED THE DRAWINGS. THE CONTRACTOR CONFIRMS THAT HE HAS VISITED THE SITE, FAMILIARIZED HIMSELF WITH THE LOCAL CONDITIONS, VERIFIED FIELD DIMENSIONS AND CORRELATED HIS OBSERVATIONS WITH THE REQUIREMENTS OF THE CONTRACT DOCUMENTS.

AS INSTRUMENTS OF SERVICE, ALL DRAWINGS, SPECIFICATIONS, CAD FILES OR OTHER ELECTRONIC MEDIA AND COPIED THERE OF FURNISHED BY THE ENGINEER ARE HIS PROPERTY. THEY ARE TO BE USED ONLY FOR THIS PROJECT AND ARE NOT TO BE USED ON ANY OTHER PROJECT, INCLUDING REPEATS OF THE PROJECT. CHANGES TO THE DRAWINGS MAY ONLY BE MADE BY THE ENGINEER.

UNLESS THE REVISION TITLE IS "ISSUED FOR CONSTRUCTION", THESE DRAWINGS SHALL BE CONSIDERED PRELIMINARY AND SHALL NOT BE USED AS A CONSTRUCTION DOCUMENT.

THESE DRAWINGS ILLUSTRATES THE WORK TO BE DONE. THE ENGINEER IS NOT RESPONSIBLE FOR THE MEANS, METHODS, TECHNIQUES, SEQUENCES, AND PROCEDURES USED TO DO THE WORK, OR THE SAFETY ASPECTS OF CONSTRUCTION, AND NOTHING ON THESE DRAWINGS EXPRESSED OR IMPLIED CHANGES THIS CONDITION. CONTRACTOR SHALL DETERMINE ALL CONDITIONS AT THE SITE AND SHALL BE RESPONSIBLE FOR KNOWING HOW THEY AFFECT THE WORK. SUBMITTAL OF A BID TO PERFORM THIS WORK IS ACKNOWLEDGEMENT OF THE RESPONSIBILITIES, AND THAT THEY HAVE BEEN FULLY CONSIDERED IN PLANNING OF THE WORK, AND THE BID PRICE. NO CLAIMS FOR EXTRA CHANGES DUE TO THESE CONDITIONS WILL BE FORTHCOMING.

UNAUTHORIZED CHANGES:

IN THE EVENT THE CLIENT, THE CLIENT'S CONTRACTORS OR SUBCONTRACTORS, OR ANYONE FOR WHOM THE CLIENT IS LEGALLY LIABLE MAKES OR PERMITS TO BE MADE ANY CHANGES TO ANY REPORTS, PLANS, SPECIFICATIONS OR OTHER CONSTRUCTION DOCUMENTS PREPARED BY LRL ASSOCIATES LTD. (LRL) WITHOUT OBTAINING LRL'S PRIOR WRITTEN CONSENT, THE CLIENT SHALL ASSUME FULL RESPONSIBILITY FOR THE RESULTS OF SUCH CHANGES, THEREFORE THE CLIENT AGREES TO WAIVE ANY CLAIM AGAINST LRL AND TO RELEASE LRL FROM ANY LIABILITY ARISING DIRECTLY OR INDIRECTLY FROM SUCH UNAUTHORIZED CHANGES.

IN ADDITION, THE CLIENT AGREES, TO THE FULLEST EXTENT PERMITTED BY LAW, TO INDEMNIFY AND HOLD HARMLESS LRL FROM ANY DAMAGES, LIABILITIES OR COST, INCLUDING REASONABLE ATTORNEY'S FEES AND COST OF DEFENSE, ARISING FROM SUCH CHANGES.

IN ADDITION, THE CLIENT AGREES TO INCLUDE IN ANY CONTRACTS FOR CONSTRUCTION APPROPRIATE LANGUAGE THAT PROHIBITS THE CONTRACTOR OR ANY SUBCONTRACTORS OF ANY TIER FROM MAKING ANY CHANGES OR MODIFICATIONS TO LRL'S CONSTRUCTION DOCUMENTS WITHOUT THE PRIOR WRITTEN APPROVAL OF LRL AND THAT FURTHER REQUIRES THE CONTRACTOR TO INDEMNIFY BOTH LRL AND THE CLIENT FROM ANY LIABILITY OR COST ARISING FROM SUCH CHANGES MADE WITHOUT SUCH PROPER AUTHORIZATION.

GENERAL NOTES:

EXISTING SERVICES AND UTILITIES SHOWN ON THESE DRAWINGS ARE TAKEN FROM THE BEST AVAILABLE RECORDS, BUT MAY NOT BE COMPLETE OR TO DATE. CONTRACTOR SHALL VERIFY IN FIELD FOR LOCATION AND ELEVATION OF PIPES AND CHECK WITH THE UTILITY COMPANIES BEFORE DIGGING OR PERFORMING WORK.

CONTRACTOR IS ADVISED TO COLLECT INFORMATION ON SOIL CONDITIONS BEFORE START OF CONSTRUCTION.

THE ENGINEER WAIVES ANY AND ALL RESPONSIBILITY AND LIABILITY FOR PROBLEMS WHICH ARISE FROM FAILURE TO FOLLOW THESE PLANS, SPECIFICATIONS AND THE DESIGN INTENT THEY CONVEY, OR FOR PROBLEMS WHICH ARISE FROM OTHERS' FAILURE TO OBTAIN AND/OR FOLLOW THE ENGINEER'S GUIDANCE WITH RESPECT TO ANY ERRORS, OMISSIONS, INCONSISTENCIES AMBIGUITIES OR CONFLICTS WHICH ARE ALLEGED.

CONTRACTOR TO VERIFY ALL DIMENSIONS AND NOTIFY THE ENGINEER OF ANY DISCREPANCIES BEFORE WORK COMMENCES. DO NOT SCALE DRAWINGS.

ADDITIONAL EROSION AND SEDIMENT CONTROL MEASURES, INCLUDING STRAW BALE BARRIERS AND TEMPORARY CHECK DAMS, SHALL BE INSTALLED WHERE REQUIRED TO INTERCEPT RUNOFF, REDUCE FLOW VELOCITIES, PROMOTE SEDIMENT SETTLEMENT, AND PROTECT DOWNSTREAM DRAINAGE SYSTEMS AND RECEIVING AREAS. THE TYPE, LOCATION, AND EXTENT OF THESE MEASURES SHALL BE ADJUSTED AS NECESSARY BASED ON SITE CONDITIONS AND THE PROGRESSION OF CONSTRUCTION ACTIVITIES.

No.	REVISIONS	BY	DATE
03	ISSUED FOR APPROVAL	S.V.	14 OCT. 2026
02	RE-ISSUED FOR APPROVAL	S.V.	13 FEB. 2026
01	ISSUED FOR SPC APPROVAL	S.V.	12 NOV. 2025

LICENSED PROFESSIONAL ENGINEER
V. JOHNSON
100510576
10-14-2026
PROVINCE OF ONTARIO

NOT AUTHENTIC UNLESS SIGNED AND DATED

LRL
ENGINEERING | INGÉNIERIE
5430 Canotek Road | Ottawa, ON, K1J 9G2
www.lrl.ca | (613) 842-3434

CLIENT
THEIA PARTNERS

DESIGNED BY:	DRAWN BY:	APPROVED BY:
S.V.	S.V.	V.J.

PROJECT
30 CLEARY AVENUE ODAYANHAWAY DEVELOPMENT
30 CLEARY AVENUE, OTTAWA, ON

FILE NO. D07-12-25-0149
PLAN NO. 19403

DRAWING TITLE
POST-DEVELOPMENT WATERSHED PLAN

PROJECT NO. 2631617
DATE OCTOBER 2026

C702

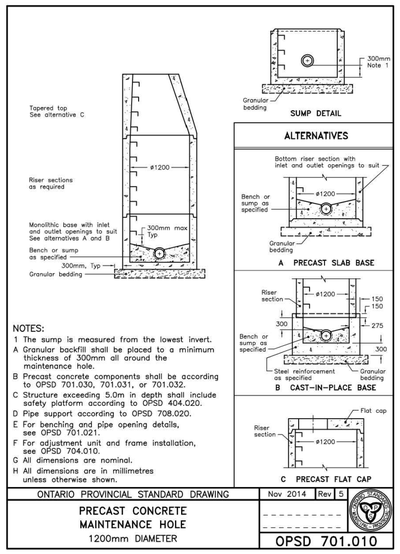

NOTES:
1 The sump is measured from the lowest invert.
A Granular backfill shall be placed to a minimum thickness of 300mm all around the maintenance hole.
B Precast concrete components shall be according to OPSD 701.030, 701.031, or 701.032.
C Structure exceeding 5.0m in depth shall include safety platform according to OPSD 404.020.
D Pipe support according to OPSD 708.020.
E For benching and pipe opening details, see OPSD 701.021.
F For adjustment unit and frame installation, see OPSD 704.010.
G All dimensions are nominal.
H All dimensions are in millimetres unless otherwise shown.

ONTARIO PROVINCIAL STANDARD DRAWING	Nov 2014	Rev 5
PRECAST CONCRETE MAINTENANCE HOLE 1200mm DIAMETER		
	OPSD 701.010	

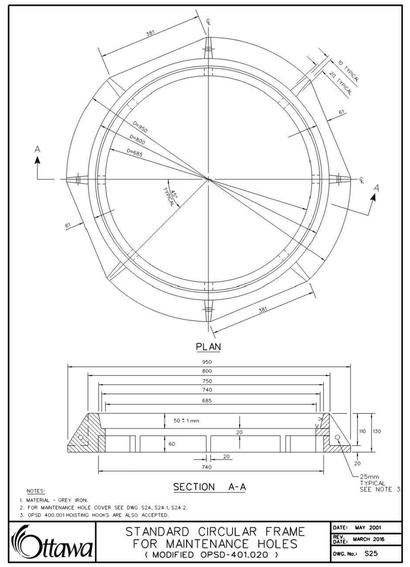

NOTES:
1. MATERIAL - GREY IRON.
2. FOR MAINTENANCE HOLE COVER SEE DWG S24, S24.1, S24.2.
3. OPSD 400.001 HOISTING HOOKS ARE ALSO ACCEPTED.

Ottawa	STANDARD CIRCULAR FRAME FOR MAINTENANCE HOLES (MODIFIED OPSD-401.020)	DATE: MAY 2001 REV. DATE: MARCH 2016 DWG. No.: S25

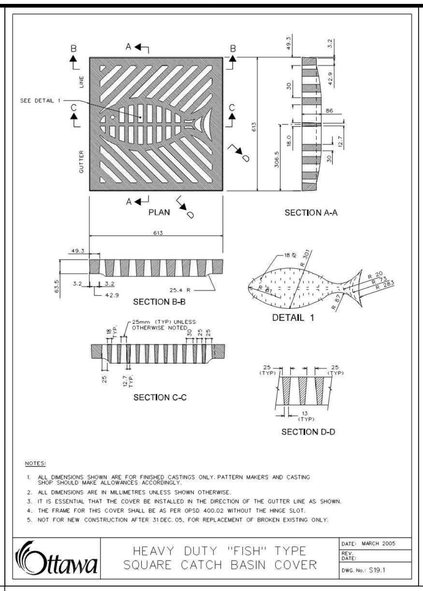

NOTES:
1. ALL DIMENSIONS SHOWN ARE FOR FINISHED CASTINGS ONLY; PATTERN MAKERS AND CASTING SHOP SHOULD MAKE ALLOWANCES ACCORDINGLY.
2. ALL DIMENSIONS ARE IN MILLIMETRES UNLESS SHOWN OTHERWISE.
3. IT IS ESSENTIAL THAT THE COVER BE INSTALLED IN THE DIRECTION OF THE GUTTER LINE AS SHOWN.
4. THE FRAME FOR THIS COVER SHALL BE AS PER OPSD 400.02 WITHOUT THE HINGE SLOT.
5. NOT FOR NEW CONSTRUCTION AFTER 31 DEC. 05, FOR REPLACEMENT OF BROKEN EXISTING ONLY.

Ottawa	HEAVY DUTY "FISH" TYPE SQUARE CATCH BASIN COVER	DATE: MARCH 2005 REV. DATE: DWG. No.: S19.1

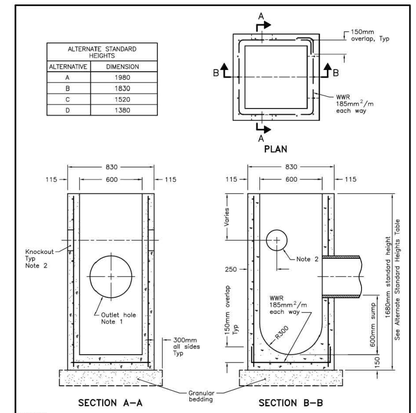

NOTES:
1 Outlet hole size 525mm diameter maximum, location as required.
2 200mm diameter knockout to accommodate subdrain. Knockout shall be 60mm deep.
A Centre reinforcing in base slab and walls ±20mm.
B Granular backfill shall be placed to a minimum thickness of 300mm all around the catch basin.
C Frame, grate, and adjustment units shall be installed according to OPSD 704.010.
D Pipe support shall be according to OPSD 708.020.
E All dimensions are nominal.
F All dimensions are in millimetres unless otherwise shown.

ONTARIO PROVINCIAL STANDARD DRAWING	Nov 2019	Rev 4
PRECAST CONCRETE CATCH BASIN 600x600mm		
	OPSD 705.010	

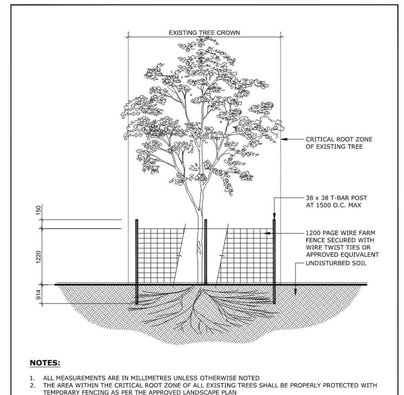

NOTES:
1. ALL MEASUREMENTS ARE IN MILLIMETRES UNLESS OTHERWISE NOTED
2. THE AREA WITHIN THE CRITICAL ROOT ZONE OF ALL EXISTING TREES SHALL BE PROPERLY PROTECTED WITH TEMPORARY FENCING AS PER THE APPROVED LANDSCAPE PLAN
3. THE SURVEY SHALL SHOW EXISTING ELEVATION AT BASE OF ALL TREES TO BE PRESERVED AS SHOWN BY "+"
4. THE AREA WITHIN THE PROTECTED FENCING SHALL REMAIN UNDISTURBED AND SHALL NOT BE USED FOR THE STORAGE OF BUILDING MATERIALS OR EQUIPMENT. REMOVE ALL DEBRIS
5. PRUNE BRANCHES TO REMOVE DAMAGED OR OBJECTIONABLE BRANCHES. DO NOT PRUNE LEADERS
6. TREE PROTECTION SHALL REMAIN UNTIL SUBSTANTIAL PERFORMANCE OF THE PROJECT
7. IF CUTTING OF ROOTS OR CHANGING OF GRADES AROUND EXISTING TREES IS CALLED FOR, FOLLOW APPROPRIATE DETAILS AS DIRECTED BY LANDSCAPE ARCHITECT
8. IF TREES ARE BEING AFFECTED BY CONSTRUCTION, A WATER AND FERTILIZING PROGRAM WILL BE REQUIRED TO THE SATISFACTION OF THE CITY

Ottawa	TITLE: TREE PRESERVATION PROTECTION FENCE	DATE: FEB 2013 REV.: FEB2017 DWG No.: F7

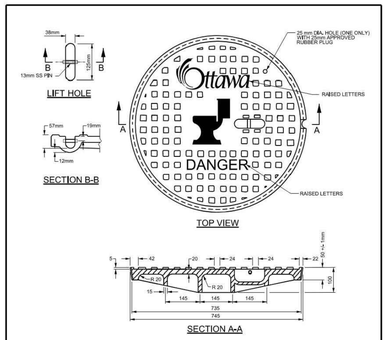

NOTES:
1. PIN TO BE SS.
2. FOR FRAME DETAIL SEE DWG No. S25.
3. ALL DIMENSIONS ARE IN MILLIMETRES UNLESS OTHERWISE SHOWN.

Ottawa	STANDARD CIRCULAR SANITARY & COMBINED MAINTENANCE HOLE COVER	DATE: MARCH 2006 REV. DATE: MARCH 2017 DWG. No.: S24

N.T.S.

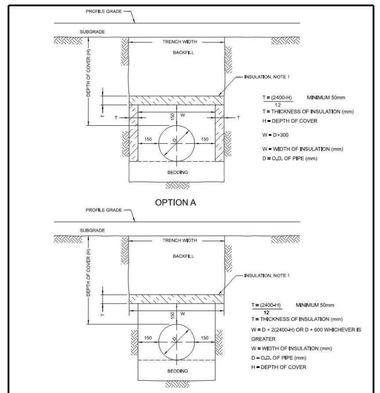

NOTES:
1. THE INSULATION MATERIAL SHALL BE EXTRUDED POLYSTYRENE ACCORDING TO MMA-93.13 WITH A MINIMUM COMPRESSIVE STRENGTH OF 275 KPa.
2. MINIMUM INSULATION THICKNESS SHALL BE 50MM.
3. JOINTS SHALL BE STAGGERED FOR MULTIPLE INSULATION SHEETS.
4. ALL DIMENSIONS ARE IN MILLIMETERS UNLESS OTHERWISE SHOWN.

Ottawa	INSULATION FOR SHALLOW SEWERS	DATE: MARCH 2003 REV. DATE: - DWG. No.: S35

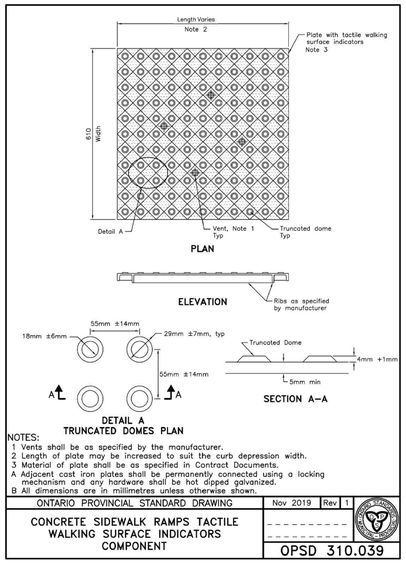

NOTES:
1 Vents shall be as specified by the manufacturer.
2 Length of plate may be increased to suit the curb depression width.
3 Material of plate shall be as specified in Contract Documents.
A Adjacent cast iron plates shall be permanently connected using a locking mechanism and any hardware shall be hot dipped galvanized.
B All dimensions are in millimetres unless otherwise shown.

ONTARIO PROVINCIAL STANDARD DRAWING	Nov 2019	Rev 1
CONCRETE SIDEWALK RAMPS TACTILE WALKING SURFACE INDICATORS COMPONENT		
	OPSD 310.039	

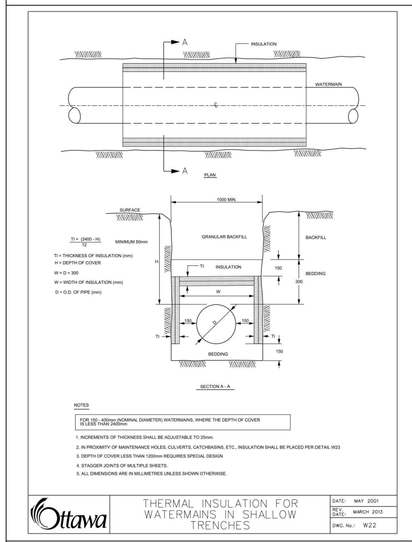

NOTES
FOR 150 - 400mm (NOMINAL DIAMETER) WATERMAINS, WHERE THE DEPTH OF COVER IS LESS THAN 2400mm

1. INCREMENTS OF THICKNESS SHALL BE ADJUSTABLE TO 25mm.
2. IN PROXIMITY OF MAINTENANCE HOLES, CULVERTS, CATCHBASINS, ETC., INSULATION SHALL BE PLACED PER DETAIL W23
3. DEPTH OF COVER LESS THAN 1200mm REQUIRES SPECIAL DESIGN
4. STAGGER JOINTS OF MULTIPLE SHEETS.
5. ALL DIMENSIONS ARE IN MILLIMETRES UNLESS SHOWN OTHERWISE.

Ottawa	THERMAL INSULATION FOR WATERMAINS IN SHALLOW TRENCHES	DATE: MAY 2001 REV. DATE: MARCH 2013 DWG. No.: W22

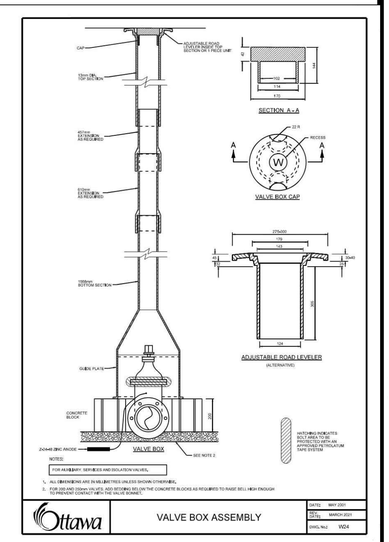

NOTE:
FOR AUXILIARY, SERVICES AND ISOLATION VALVES.

1. ALL DIMENSIONS ARE IN MILLIMETRES UNLESS SHOWN OTHERWISE.
2. FOR 300 AND 250mm VALVES, ADD SECOND BOLT ON THE CONCRETE BLOCKS AS REQUIRED TO RADIE BELL HIGH ENOUGH TO PREVENT CONTACT WITH THE VALVE BONNET.

Ottawa	VALVE BOX ASSEMBLY	DATE: MAY 2001 REV. DATE: MARCH 2020 DWG. No.: W24

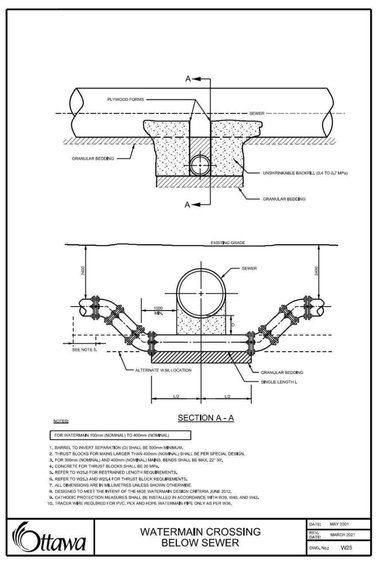

NOTES:
FOR WATERMAINS 150mm (NOMINAL) TO 400mm (NOMINAL)

1. BARREL TO INVERT SEPARATION (D) SHALL BE 300mm MINIMUM.
2. THRUST BLOCKS FOR MAINS LARGER THAN 400mm (NOMINAL) SHALL BE PER SPECIAL DESIGN.
3. FOR 300mm (NOMINAL) AND 400mm (NOMINAL) MAINS, BENDS SHALL BE MAX. 22° 30'.
4. CONCRETE FOR THRUST BLOCKS SHALL BE 20 MPa.
5. REFER TO W28.8 FOR RESTRAINED LENGTH REQUIREMENTS.
6. REFER TO W30.0 AND W30.4 FOR THRUST BLOCK REQUIREMENTS.
7. ALL DIMENSIONS ARE IN MILLIMETRES UNLESS SHOWN OTHERWISE.
8. DESIGNED TO MEET THE INTENT OF THE MOE WATERMAIN DESIGN CRITERIA JUNE 2012.
9. CATHODIC PROTECTION MEASURES SHALL BE INSTALLED IN ACCORDANCE WITH W28, W40, AND W42.
10. TRACER WIRE REQUIRED FOR PVC, PEX AND HDPE WATERMAIN PIPE ONLY AS PER W36.

Ottawa	WATERMAIN CROSSING BELOW SEWER	DATE: MAY 2001 REV. DATE: MARCH 2021 DWG. No.: W25

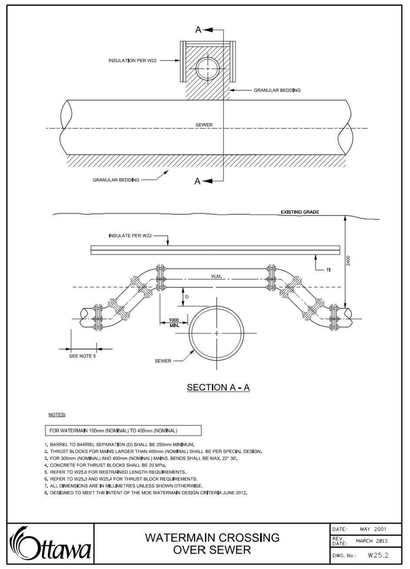

NOTES:
FOR WATERMAIN 150mm (NOMINAL) TO 400mm (NOMINAL)

1. BARREL TO BARREL SEPARATION (D) SHALL BE 250mm MINIMUM.
2. THRUST BLOCKS FOR MAINS LARGER THAN 400mm (NOMINAL) SHALL BE PER SPECIAL DESIGN.
3. FOR 300mm (NOMINAL) AND 400mm (NOMINAL) MAINS, BENDS SHALL BE MAX. 22° 30'.
4. CONCRETE FOR THRUST BLOCKS SHALL BE 20 MPa.
5. REFER TO W28.8 FOR RESTRAINED LENGTH REQUIREMENTS.
6. REFER TO W30.0 AND W30.4 FOR THRUST BLOCK REQUIREMENTS.
7. ALL DIMENSIONS ARE IN MILLIMETRES UNLESS SHOWN OTHERWISE.
8. DESIGNED TO MEET THE INTENT OF THE MOE WATERMAIN DESIGN CRITERIA JUNE 2012.

Ottawa	WATERMAIN CROSSING OVER SEWER	DATE: MAY 2001 REV. DATE: DWG. No.: W25.2

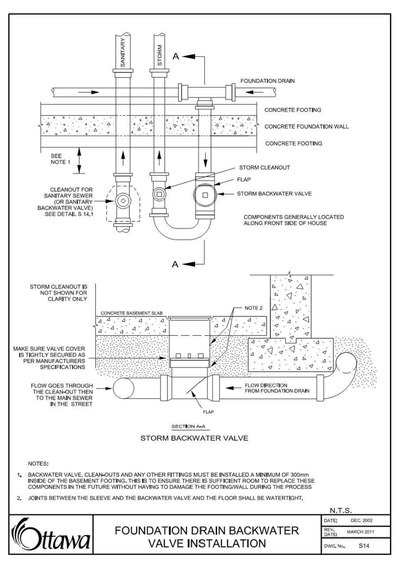

NOTES:
1. BACKWATER VALVE, CLEAN-OUTS AND ANY OTHER FITTINGS MUST BE INSTALLED A MINIMUM OF 300mm INSIDE OF THE BASEMENT FOOTING. THIS IS TO ENSURE THERE IS SUFFICIENT ROOM TO REPLACE THESE COMPONENTS IN THE FUTURE WITHOUT HAVING TO DAMAGE THE FOOTING/WALL DURING THE PROCESS
2. JOINTS BETWEEN THE SLEEVE AND THE BACKWATER VALVE AND THE FLOOR SHALL BE WATERTIGHT.

N.T.S.

Ottawa	FOUNDATION DRAIN BACKWATER VALVE INSTALLATION	DATE: DEC. 2002 REV. DATE: MARCH 2011 DWG. No.: S14

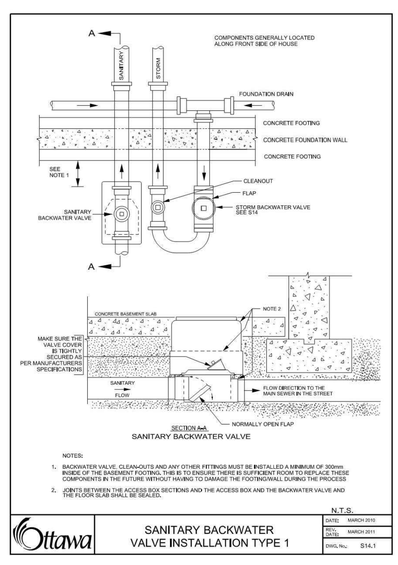

NOTES:
1. BACKWATER VALVE, CLEAN-OUTS AND ANY OTHER FITTINGS MUST BE INSTALLED A MINIMUM OF 300mm INSIDE OF THE BASEMENT FOOTING. THIS IS TO ENSURE THERE IS SUFFICIENT ROOM TO REPLACE THESE COMPONENTS IN THE FUTURE WITHOUT HAVING TO DAMAGE THE FOOTING/WALL DURING THE PROCESS
2. JOINTS BETWEEN THE ACCESS BOX SECTIONS AND THE ACCESS BOX AND THE BACKWATER VALVE AND THE FLOOR SLAB SHALL BE SEALED.

N.T.S.

Ottawa	SANITARY BACKWATER VALVE INSTALLATION TYPE 1	DATE: MARCH 2010 REV. DATE: MARCH 2011 DWG. No.: S14.1

USE AND INTERPRETATION OF DRAWINGS

GENERAL CONDITIONS OF THE CONTRACT FOR CONSTRUCTION ARE PART OF THE CONTRACT DOCUMENTS AND DESCRIBE USE AND INTENT OF THE DRAWING. THE CONTRACT DOCUMENTS INCLUDE NOT ONLY THE DRAWINGS, BUT ALSO THE OWNER-CONTRACTOR AGREEMENTS, CONDITIONS OF THE CONTRACT, THE SPECIFICATIONS, ADDENDA, AND MODIFICATIONS ISSUED AFTER EXECUTION OF THE CONTRACT. THESE CONTRACT DOCUMENTS ARE COMPLEMENTARY, AND WHAT IS REQUIRED BY ANY ONE SHALL BE BINDING AS IF REQUIRED BY ALL. WORK NOT COMPLETELY DELINEATED HEREON SHALL BE CONSTRUCTED OF THE SAME MATERIALS AND DETAILED SIMILARLY AS WORK SHOWN MORE COMPLETELY ELSEWHERE IN THE CONTRACT DOCUMENTS.

BY USE OF THE DRAWINGS FOR CONSTRUCTION OF THE PROJECT, THE OWNER CONFIRMS THAT HE HAS REVIEWED AND APPROVED THE DRAWINGS. THE CONTRACTOR CONFIRMS THAT HE HAS VISITED THE SITE, FAMILIARIZED HIMSELF WITH THE LOCAL CONDITIONS, VERIFIED FIELD DIMENSIONS AND CORRELATED HIS OBSERVATIONS WITH THE REQUIREMENTS OF THE CONTRACT DOCUMENTS.

AS INSTRUMENTS OF SERVICE, ALL DRAWINGS, SPECIFICATIONS, CAD FILES OR OTHER ELECTRONIC MEDIA AND COPIED THERE OF FURNISHED BY THE ENGINEER ARE HIS PROPERTY. THEY ARE TO BE USED ONLY FOR THIS PROJECT AND ARE NOT TO BE USED ON ANY OTHER PROJECT, INCLUDING REPEATS OF THE PROJECT. CHANGES TO THE DRAWINGS MAY ONLY BE MADE BY THE ENGINEER.

UNLESS THE REVISION TITLE IS "ISSUED FOR CONSTRUCTION", THESE DRAWINGS SHALL BE CONSIDERED PRELIMINARY AND SHALL NOT BE USED AS A CONSTRUCTION DOCUMENT.

THESE DRAWINGS ILLUSTRATES THE WORK TO BE DONE. THE ENGINEER IS NOT RESPONSIBLE FOR THE MEANS, METHODS, TECHNIQUES, SEQUENCES, AND PROCEDURES USED TO DO THE WORK, OR THE SAFETY ASPECTS OF CONSTRUCTION, AND NOTHING ON THESE DRAWINGS EXPRESSED OR IMPLIED CHANGES THIS CONDITION. CONTRACTOR SHALL DETERMINE ALL CONDITIONS AT THE SITE AND SHALL BE RESPONSIBLE FOR KNOWING HOW THEY AFFECT THE WORK. SUBMITTAL OF A BID TO PERFORM THIS WORK IS ACKNOWLEDGEMENT OF THE RESPONSIBILITIES, AND THAT THEY HAVE BEEN FULLY CONSIDERED IN PLANNING OF THE WORK, AND THE BID PRICE. NO CLAIMS FOR EXTRA CHANGES DUE TO THESE CONDITIONS WILL BE FORTHCOMING.

UNAUTHORIZED CHANGES:

IN THE EVENT THE CLIENT, THE CLIENT'S CONTRACTORS OR SUBCONTRACTORS, OR ANYONE FOR WHOM THE CLIENT IS LEGALLY LIABLE MAKES OR PERMITS TO BE MADE ANY CHANGES TO ANY REPORTS, PLANS, SPECIFICATIONS OR OTHER CONSTRUCTION DOCUMENTS PREPARED BY LRL ASSOCIATES LTD. (LRL) WITHOUT OBTAINING LRL'S PRIOR WRITTEN CONSENT, THE CLIENT SHALL ASSUME FULL RESPONSIBILITY FOR THE RESULTS OF SUCH CHANGES, THEREFORE THE CLIENT AGREES TO WAIVE ANY CLAIM AGAINST LRL AND TO RELEASE LRL FROM ANY LIABILITY ARISING DIRECTLY OR INDIRECTLY FROM SUCH UNAUTHORIZED CHANGES.

IN ADDITION, THE CLIENT AGREES TO THE FULLEST EXTENT PERMITTED BY LAW, TO INDEMNIFY AND HOLD HARMLESS LRL FROM ANY DAMAGES, LIABILITIES OR COST, INCLUDING REASONABLE ATTORNEY'S FEES AND COST OF DEFENSE, ARISING FROM SUCH CHANGES.

IN ADDITION, THE CLIENT AGREES TO INCLUDE IN ANY CONTRACTS FOR CONSTRUCTION APPROPRIATE LANGUAGE THAT PROHIBITS THE CONTRACTOR OR ANY SUBCONTRACTORS OR ANY PERSONS FROM MAKING ANY CHANGES OR MODIFICATIONS TO LRL'S CONSTRUCTION DOCUMENTS WITHOUT THE PRIOR WRITTEN APPROVAL OF LRL AND THAT FURTHER REQUIRES THE CONTRACTOR TO INDEMNIFY BOTH LRL AND THE CLIENT FROM ANY LIABILITY OR COST ARISING FROM SUCH CHANGES MADE WITHOUT SUCH PROPER AUTHORIZATION.

GENERAL NOTES:

EXISTING SERVICES AND UTILITIES SHOWN ON THESE DRAWINGS ARE TAKEN FROM THE BEST AVAILABLE RECORDS, BUT MAY NOT BE COMPLETE OR TO DATE. CONTRACTOR SHALL VERIFY IN FIELD FOR LOCATION AND ELEVATION OF PIPES AND CHECK WITH THE UTILITY COMPANIES BEFORE DIGGING OR PERFORMING WORK.

CONTRACTOR IS ADVISED TO COLLECT INFORMATION ON SOIL CONDITIONS BEFORE START OF CONSTRUCTION.

THE ENGINEER WAIVES ANY AND ALL RESPONSIBILITY AND LIABILITY FOR PROBLEMS WHICH ARISE FROM FAILURE TO FOLLOW THESE PLANS, SPECIFICATIONS AND THE DESIGN INTENT THEY CONVEY, OR FOR PROBLEMS WHICH ARISE FROM OTHERS' FAILURE TO OBTAIN AND/OR FOLLOW THE ENGINEER'S GUIDANCE WITH RESPECT TO ANY ERRORS, OMISSIONS, INCONSISTENCIES AMBIGUITIES OR CONFLICTS WHICH ARE ALLEGED.

CONTRACTOR TO VERIFY ALL DIMENSIONS AND NOTIFY THE ENGINEER OF ANY DISCREPANCIES BEFORE WORK COMMENCES. DO NOT SCALE DRAWINGS.

ADDITIONAL EROSION AND SEDIMENT CONTROL MEASURES, INCLUDING STRAW BALE BARRIERS AND TEMPORARY CHECK DAMS, SHALL BE INSTALLED WHERE REQUIRED TO INTERCEPT RUNOFF, REDUCE FLOW VELOCITIES, PROMOTE SEDIMENT SETTLEMENT, AND PROTECT DOWNSTREAM DRAINAGE SYSTEMS AND RECEIVING AREAS. THE TYPE, LOCATION, AND EXTENT OF THESE MEASURES SHALL BE ADJUSTED AS NECESSARY BASED ON SITE CONDITIONS AND THE PROGRESSION OF CONSTRUCTION ACTIVITIES.

No.	REVISIONS	BY	DATE
03	ISSUED FOR APPROVAL	S.V.	14 OCT. 2026
02	RE-ISSUED FOR APPROVAL	S.V.	13 FEB. 2026
01	ISSUED FOR SPC APPROVAL	S.V.	12 NOV. 2025

LICENSED PROFESSIONAL ENGINEER V. JOHNSON 100510576 10-14-2026 PROVINCE OF ONTARIO

NOT AUTHENTIC UNLESS SIGNED AND DATED

LRL
ENGINEERING | INGÉNIERIE
5430 Canotek Road | Ottawa, ON, K1J 9G2
www.lrl.ca | (613) 842-3434

CLIENT
THEIA PARTNERS

DESIGNED BY:	DRAWN BY:	APPROVED BY:
S.V.	S.V.	V.J.

PROJECT
30 CLEARY AVENUE ODAYANHAWAY DEVELOPMENT
30 CLEARY AVENUE, OTTAWA, ON

FILE NO.	PLAN NO.
D07-12-25-0149	19403

DRAWING TITLE
CONSTRUCTION DETAIL PLAN

PROJECT NO.
2631617

DATE
OCTOBER 2026

C901

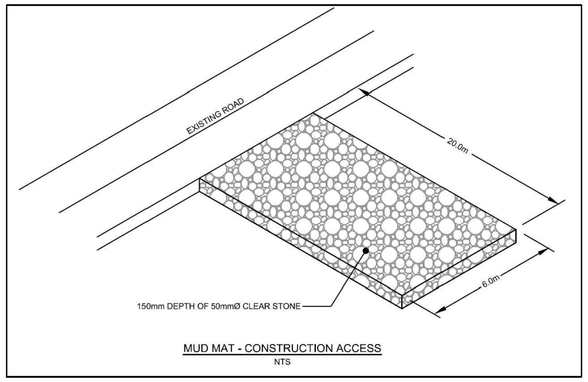

MUD MAT - CONSTRUCTION ACCESS
NTS

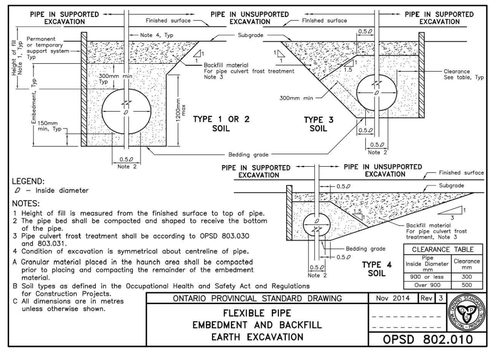

ONTARIO PROVINCIAL STANDARD DRAWING	Nov 2014	Rev 3
FLEXIBLE PIPE EMBEDMENT AND BACKFILL EARTH EXCAVATION		
OPSD 802.010		

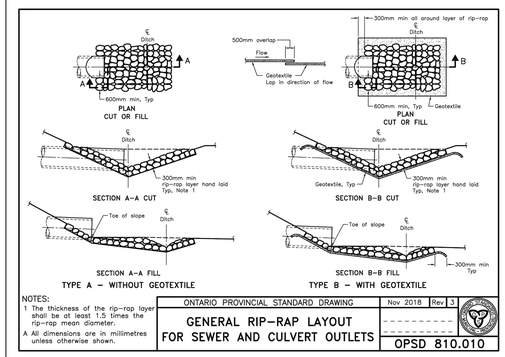

NOTES:
1 The thickness of the rip-rap layer shall be at least 1.5 times the rip-rap mean diameter.
A All dimensions are in millimetres unless otherwise shown.

ONTARIO PROVINCIAL STANDARD DRAWING	Nov 2018	Rev 3
GENERAL RIP–RAP LAYOUT FOR SEWER AND CULVERT OUTLETS		
OPSD 810.010		

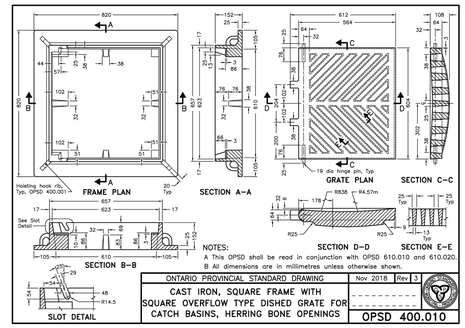

NOTES:
A This OPSD shall be read in conjunction with OPSD 610.010 and 610.020.
B All dimensions are in millimetres unless otherwise shown.

SLOT DETAIL

ONTARIO PROVINCIAL STANDARD DRAWING	Nov 2018	Rev 3
CAST IRON, SQUARE FRAME WITH SQUARE OVERFLOW TYPE DISHED GRATE FOR CATCH BASINS, HERRING BONE OPENINGS		
OPSD 400.010		

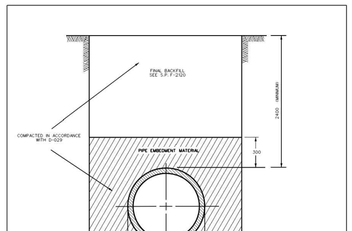

NOTES:
1. PIPE EMBEDMENT MATERIAL – GRANULAR 'A'.
2. FINAL BACKFILL – APPROVED NATIVE MATERIAL OR SELECT SUBGRADE IN ACCORDANCE WITH F-2120
3. ALL DIMENSIONS ARE IN MILLIMETRES UNLESS SHOWN OTHERWISE.
4.

TYPE OUTSIDE DIA.	CLEARANCE
900 or LESS	450
OVER 900	500

5. WHEN APPROVED BY THE CONTRACT ADMINISTRATOR, POOR SOILS SHALL BE EXCAVATED TO CREATE A FOUNDATION THAT SHALL BE FILLED TO THE BEDDING WITH GRANULAR 'B'.

Ottawa | STANDARD TRENCH DETAIL | DATE: MAY 2001 | REV. DATE: MARCH 2016 | DWG. No.: W17

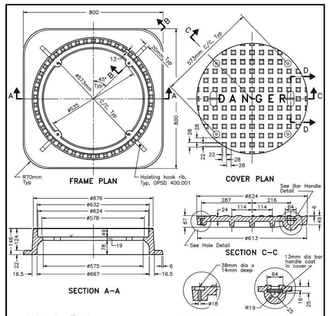

NOTE:
A All dimensions are in millimetres unless otherwise shown.

ONTARIO PROVINCIAL STANDARD DRAWING	Nov 2018	Rev 4
CAST IRON, SQUARE FRAME WITH CIRCULAR WATERTIGHT COVER FOR MAINTENANCE HOLES		
OPSD 401.030		

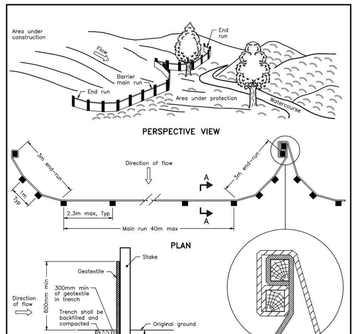

NOTE:
A All dimensions are in millimetres unless otherwise shown.

ONTARIO PROVINCIAL STANDARD DRAWING	Nov 2021	Rev 3
LIGHT–DUTY SILT FENCE BARRIER		
OPSD 219.110		

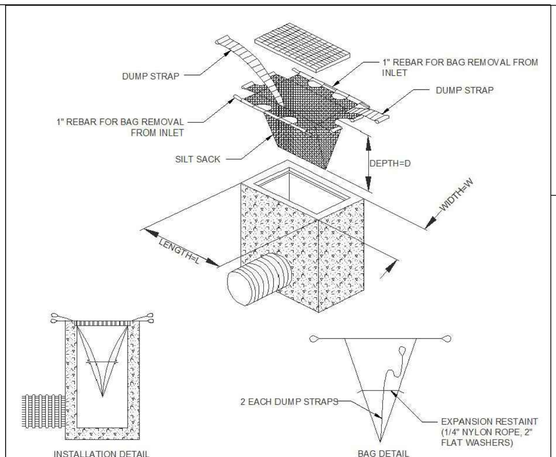

INLET SEDIMENT CONTROL DEVICE
N.T.S.

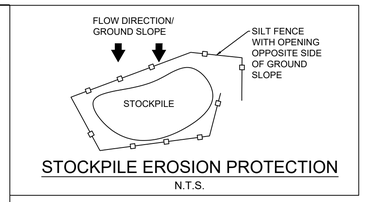

STOCKPILE EROSION PROTECTION
N.T.S.

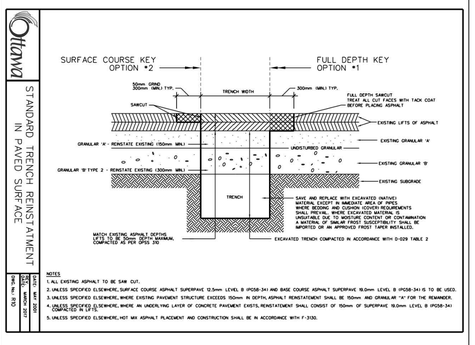

NOTES
1. ALL EXISTING ASPHALT TO BE SAW CUT.
2. UNLESS SPECIFIED ELSEWHERE, SURFACE COURSE ASPHALT SUPERPAVE 12.5mm LEVEL B (PG58-34) AND BASE COURSE ASPHALT SUPERPAVE 19.0mm LEVEL B (PG58-34) IS TO BE USED.
3. UNLESS SPECIFIED ELSEWHERE, WHERE EXISTING PAVEMENT STRUCTURE EXCEEDS 150mm IN DEPTH, ASPHALT REINSTATEMENT SHALL BE 150mm AND GRANULAR "A" FOR THE REMAINDER.
4. UNLESS SPECIFIED ELSEWHERE, WHERE AN UNDERLYING LAYER OF CONCRETE PAVEMENT EXISTS, REINSTATEMENT SHALL CONSIST OF 150mm OF SUPERPAVE 19.0mm LEVEL B (PG58-34) COMPACTED IN LIFTS.
5. UNLESS SPECIFIED ELSEWHERE, HOT MIX ASPHALT PLACEMENT AND CONSTRUCTION SHALL BE IN ACCORDANCE WITH F-2130.

DATE: MAY 2001 | REV. DATE: MARCH 2017 | DWG. No.: R10

USE AND INTERPRETATION OF DRAWINGS

GENERAL CONDITIONS OF THE CONTRACT FOR CONSTRUCTION ARE PART OF THE CONTRACT DOCUMENTS AND DESCRIBE USE AND INTENT OF THE DRAWING. THE CONTRACT DOCUMENTS INCLUDE NOT ONLY THE DRAWINGS, BUT ALSO THE OWNER-CONTRACTOR AGREEMENTS, CONDITIONS OF THE CONTRACT, THE SPECIFICATIONS, ADDENDA, AND MODIFICATIONS ISSUED AFTER EXECUTION OF THE CONTRACT. THESE CONTRACT DOCUMENTS ARE COMPLEMENTARY, AND WHAT IS REQUIRED BY ANY ONE SHALL BE BINDING AS IF REQUIRED BY ALL. WORK NOT COMPLETELY DELINEATED HEREON SHALL BE CONSTRUCTED OF THE SAME MATERIALS AND DETAILED SIMILARLY AS WORK SHOWN MORE COMPLETELY ELSEWHERE IN THE CONTRACT DOCUMENTS.

BY USE OF THE DRAWINGS FOR CONSTRUCTION OF THE PROJECT, THE OWNER CONFIRMS THAT HE HAS REVIEWED AND APPROVED THE DRAWINGS. THE CONTRACTOR CONFIRMS THAT HE HAS VISITED THE SITE, FAMILIARIZED HIMSELF WITH THE LOCAL CONDITIONS, VERIFIED FIELD DIMENSIONS AND CORRELATED HIS OBSERVATIONS WITH THE REQUIREMENTS OF THE CONTRACT DOCUMENTS.

AS INSTRUMENTS OF SERVICE, ALL DRAWINGS, SPECIFICATIONS, CAD FILES OR OTHER ELECTRONIC MEDIA AND COPIED THERE OF FURNISHED BY THE ENGINEER ARE HIS PROPERTY. THEY ARE TO BE USED ONLY FOR THIS PROJECT AND ARE NOT TO BE USED ON ANY OTHER PROJECT, INCLUDING REPEATS OF THE PROJECT. CHANGES TO THE DRAWINGS MAY ONLY BE MADE BY THE ENGINEER.

UNLESS THE REVISION TITLE IS "ISSUED FOR CONSTRUCTION", THESE DRAWINGS SHALL BE CONSIDERED PRELIMINARY AND SHALL NOT BE USED AS A CONSTRUCTION DOCUMENT.

THESE DRAWINGS ILLUSTRATES THE WORK TO BE DONE. THE ENGINEER IS NOT RESPONSIBLE FOR THE MEANS, METHODS, TECHNIQUES, SEQUENCES, AND PROCEDURES USED TO DO THE WORK, OR THE SAFETY ASPECTS OF CONSTRUCTION, AND NOTHING ON THESE DRAWINGS EXPRESSED OR IMPLIED CHANGES THIS CONDITION. CONTRACTOR SHALL DETERMINE ALL CONDITIONS AT THE SITE AND SHALL BE RESPONSIBLE FOR KNOWING HOW THEY AFFECT THE WORK. SUBMITTAL OF A BID TO PERFORM THIS WORK IS ACKNOWLEDGEMENT OF THE RESPONSIBILITIES, AND THAT THEY HAVE BEEN FULLY CONSIDERED IN PLANNING OF THE WORK, AND THE BID PRICE. NO CLAIMS FOR EXTRA CHANGES DUE TO THESE CONDITIONS WILL BE FORTHCOMING.

UNAUTHORIZED CHANGES:

IN THE EVENT THE CLIENT, THE CLIENT'S CONTRACTORS OR SUBCONTRACTORS, OR ANYONE FOR WHOM THE CLIENT IS LEGALLY LIABLE MAKES OR PERMITS TO BE MADE ANY CHANGES TO ANY REPORTS, PLANS, SPECIFICATIONS OR OTHER CONSTRUCTION DOCUMENTS PREPARED BY LRL ASSOCIATES LTD. (LRL) WITHOUT OBTAINING LRL'S PRIOR WRITTEN CONSENT, THE CLIENT SHALL ASSUME FULL RESPONSIBILITY FOR THE RESULTS OF SUCH CHANGES. THEREFORE THE CLIENT AGREES TO WAIVE ANY CLAIM AGAINST LRL AND TO RELEASE LRL FROM ANY LIABILITY ARISING DIRECTLY OR INDIRECTLY FROM SUCH UNAUTHORIZED CHANGES.

IN ADDITION, THE CLIENT AGREES, TO THE FULLEST EXTENT PERMITTED BY LAW, TO INDEMNIFY AND HOLD HARMLESS LRL FROM ANY DAMAGES, LIABILITIES OR COST, INCLUDING REASONABLE ATTORNEY'S FEES AND COST OF DEFENSE, ARISING FROM SUCH CHANGES.

IN ADDITION, THE CLIENT AGREES TO INCLUDE IN ANY CONTRACTS FOR CONSTRUCTION APPROPRIATE LANGUAGE THAT PROHIBITS THE CONTRACTOR OR ANY SUBCONTRACTORS OF ANY TIER FROM MAKING ANY CHANGES OR MODIFICATIONS TO LRL'S CONSTRUCTION DOCUMENTS WITHOUT THE PRIOR WRITTEN APPROVAL OF LRL AND THAT FURTHER REQUIRES THE CONTRACTOR TO INDEMNIFY BOTH LRL AND THE CLIENT FROM ANY LIABILITY OR COST ARISING FROM SUCH CHANGES MADE WITHOUT SUCH PROPER AUTHORIZATION.

GENERAL NOTES:

EXISTING SERVICES AND UTILITIES SHOWN ON THESE DRAWINGS ARE TAKEN FROM THE BEST AVAILABLE RECORDS, BUT MAY NOT BE COMPLETE OR TO DATE. CONTRACTOR SHALL VERIFY IN FIELD FOR LOCATION AND ELEVATION OF PIPES AND CHECK WITH THE UTILITY COMPANIES BEFORE DIGGING OR PERFORMING WORK.

CONTRACTOR IS ADVISED TO COLLECT INFORMATION ON SOIL CONDITIONS BEFORE START OF CONSTRUCTION.

THE ENGINEER WAIVES ANY AND ALL RESPONSIBILITY AND LIABILITY FOR PROBLEMS WHICH ARISE FROM FAILURE TO FOLLOW THESE PLANS, SPECIFICATIONS AND THE DESIGN INTENT THEY CONVEY, OR FOR PROBLEMS WHICH ARISE FROM OTHERS' FAILURE TO OBTAIN AND/OR FOLLOW THE ENGINEER'S GUIDANCE WITH RESPECT TO ANY ERRORS, OMISSIONS, INCONSISTENCIES AMBIGUITIES OR CONFLICTS WHICH ARE ALLEGED.

CONTRACTOR TO VERIFY ALL DIMENSIONS AND NOTIFY THE ENGINEER OF ANY DISCREPANCIES BEFORE WORK COMMENCES. DO NOT SCALE DRAWINGS.

ADDITIONAL EROSION AND SEDIMENT CONTROL MEASURES, INCLUDING STRAW BALE BARRIERS AND TEMPORARY CHECK DAMS, SHALL BE INSTALLED WHERE REQUIRED TO INTERCEPT RUNOFF, REDUCE FLOW VELOCITIES, PROMOTE SEDIMENT SETTLEMENT, AND PROTECT DOWNSTREAM DRAINAGE SYSTEMS AND RECEIVING AREAS. THE TYPE, LOCATION, AND EXTENT OF THESE MEASURES SHALL BE ADJUSTED AS NECESSARY BASED ON SITE CONDITIONS AND THE PROGRESSION OF CONSTRUCTION ACTIVITIES.

No.	REVISIONS	BY	DATE
03	ISSUED FOR APPROVAL	S.V.	14 OCT. 2026
02	RE-ISSUED FOR APPROVAL	S.V.	13 FEB. 2026
01	ISSUED FOR SPC APPROVAL	S.V.	12 NOV. 2025

LICENSED PROFESSIONAL ENGINEER
V. JOHNSON
100510576
10-14-2026
PROVINCE OF ONTARIO

NOT AUTHENTIC UNLESS SIGNED AND DATED

LRL
ENGINEERING | INGÉNIERIE
5430 Canotek Road | Ottawa, ON, K1J 9G2
www.lrl.ca | (613) 842-3434

CLIENT
THEIA PARTNERS

DESIGNED BY:	DRAWN BY:	APPROVED BY:
S.V.	S.V.	V.J.

PROJECT
30 CLEARY AVENUE ODAYANHAWAY DEVELOPMENT
30 CLEARY AVENUE, OTTAWA, ON

FILE NO. D07-12-25-0149
PLAN NO. 19403

DRAWING TITLE
CONSTRUCTION DETAIL PLAN

PROJECT NO. 2631617
DATE OCTOBER 2026

C902