301 Somme Street Industrial

Site Servicing and Stormwater Management Report

Stantec

Prepared for:
W.O. Stinson.& Son Ltd.

September 4, 2026

Prepared by:
Stantec Consulting Ltd.

Project/File:
160402138

Stantec Consulting Ltd.

Revision	Description	Author	Date	Quality Check	Date	Independent Review	Date
0	For Review	Dustin T.	2025-08-20	Dustin T.	2025-08-21	Peter M.	2025-08-21
1	For Site Plan Approval	Dustin T.	2026-03-31	Dustin T.	2026-04-06	Peter M.	2026-04-06
2	For Site Plan Approval	Dustin T.	2026-09-01	Dustin T.	2026-09-04	Peter M.	2026-09-04

The conclusions in the Report titled 301 Somme Street Industrial are Stantec's professional opinion, as of the time of the Report, and concerning the scope described in the Report. The opinions in the document are based on conditions and information existing at the time the scope of work was conducted and do not take into account any subsequent changes. The Report relates solely to the specific project for which Stantec was retained and the stated purpose for which the Report was prepared. The Report is not to be used or relied on for any variation or extension of the project, or for any other project or purpose, and any unauthorized use or reliance is at the recipient's own risk.

Stantec has assumed all information received from W.O. Stinson & Son Ltd. (the "Client") and third parties in the preparation of the Report to be correct. While Stantec has exercised a customary level of judgment or due diligence in the use of such information, Stantec assumes no responsibility for the consequences of any error or omission contained therein.

This Report is intended solely for use by the Client in accordance with Stantec's contract with the Client. While the Report may be provided by the Client to applicable authorities having jurisdiction and to other third parties in connection with the project, Stantec disclaims any legal duty based upon warranty, reliance or any other theory to any third party, and will not be liable to such third party for any damages or losses of any kind that may result.

Prepared / Reviewed by

Signature

Dustin Thiffault, P.Eng.

Printed Name

Approved by

Signature

Peter Moroz, P.Eng.

Printed Name

Table of Contents

1 Introduction 1
1.1 Objective 2

2 Background 3
3 Water Servicing 4
3.1 Background 4
3.2 Proposed Domestic Water Servicing 4
3.3 Fire Flow Demands 4
3.4 Proposed Fire Water Servicing 5

4 Wastewater Servicing 8
4.1 Background 8
4.2 Wastewater Servicing Design 8
4.3 Proposed Servicing 8

5 Stormwater Management and Servicing 9
5.1 Objectives 9
5.2 Stormwater Management (SWM) Criteria 9
5.3 Existing Conditions 10
5.4 Proposed Stormwater Management Plan 11
5.4.1 Modeling Rationale 12
5.4.2 Input Parameters 13
5.4.3 Model Results 16
5.5 SWM Pond Design 20
5.5.1 Water Quality Control 20
5.5.2 Water Quantity Control 21
5.5.3 Pond Grading and Storage Design 21
5.5.4 Slope Stability and Erosion Control 22
5.5.5 Inlet Design 22
5.5.6 Forebay Design 23
5.5.7 Outlet Design 23
5.5.8 Pond Performance 25
5.5.9 Spill Containment 27
5.5.10 SWM Pond Operations and Maintenance 27
5.6 Water Balance 29

6 Site Grading 30
7 Utilities 30
8 Approvals 31
9 Erosion and Sediment Control During Construction 32
10 Geotechnical Investigation 33
11 Conclusions 34
11.1 Water Servicing 34
11.2 Sanitary Servicing 34
11.3 Stormwater Servicing and Management 34
11.4 Grading 34
11.5 Geotechnical Investigation 34

List of Tables

Table 5-1: Peak Allowable Discharge Rate 11
Table 5-2: General Subcatchment Parameters 13
Table 5-3: Subcatchment Parameters 13
Table 5-4: Storage Node Parameters 14
Table 5.5: Exit Loss Coefficients for Bends at Manholes 15
Table 5-8: Outlet/Orifice Parameters 16
Table 5.7: Maximum Surface Water Depths 16
Table 5-8: Site Peak Discharge Rates 17
Table 5.9: SWM Pond – Water Quality Requirements 20
Table 4.13: Proposed Pond Post-Development Outflow 21
Table 5.11: SWM Facility Operational Characteristics 26
Table 10-1: Recommended Pavement Structure 33

List of Figures

Figure 1: Key Plan 1
Figure 2. SWM Pond Stage-Storage Relationship 22
Figure 3. SWM Pond Stage-Discharge Relationship 24

List of Appendices

Appendix A Water Servicing
A.1 OBC and FUS Fire Flow Demand Calculations
Appendix B Stormwater Servicing and Management
B.1 Storm Sewer Design Sheet
B.2 PCSWMM Model Input File (100-Year, 12-Hour SCS Storm)
B.3 PCSWMM Model Output File (100-Year, 12-Hour SCS Storm)
B.4 Pond Design Calculations
B.5 Oil/Grit Separator Sizing Calculations
Appendix C External Report Excerpts

1 Introduction

Stantec Consulting Ltd. has been commissioned by W.O. Stinson & Son Ltd. to prepare the following Servicing and Stormwater Management Report in support of the proposed development located at 301 Somme Street in the City of Ottawa.

The 6.05ha site is located between Rideau Road to the north and Somme Street to the south and west. The site is currently zoned RH, and is currently undeveloped. Additional undeveloped parcels exist to the east of the proposed site. The site forms part of the existing Hawthorne Industrial Park subdivision, as shown in **Figure 1** below.

Figure 1: Key Plan

The proposed development will see a new tank and equipment storage building, a vehicle service building, exterior propane storage and equipment storage yard, and a private commercial gas bar constructed in addition to parking spaces and private driveways servicing the project limit area.

1.1 Objective

This site servicing and stormwater management (SWM) report presents a servicing scheme that is free of conflicts, provides on-site servicing in accordance with City of Ottawa Design Guidelines, and uses the existing municipal infrastructure in accordance with any limitations communicated during prior consultation with the City of Ottawa staff. Details of the existing infrastructure located within the Somme Street right of way (ROW) were obtained from available as-built drawings and site topographic survey.

Criteria and constraints provided by the City of Ottawa have been used as a basis for the detailed servicing design of the proposed development. Specific and potential development constraints to be addressed are as follows:

- Potable Water Servicing
    - Estimated water demands to characterize the proposed feed(s) for the proposed development which will be serviced from an on-site private well.
    - Provision of required fire flows for building exterior fire suppression activities via dry hydrant and on-site reservoir (stormwater management facility).
- Wastewater (Sanitary) Servicing
    - Define and size the sanitary service lateral which will be connected to a proposed on-site sewage system for dispersal.
- Storm Sewer Servicing
    - Define major and minor conveyance systems in conjunction with the proposed grading plan.
    - Determine the stormwater management storage requirements to meet the allowable release rate for the site.
    - Define and size the proposed storm sewers and stormwater management facility that will collect discharge from the site to the existing Somme Street roadside ditch.
- Prepare a grading plan in accordance with the proposed site plan and existing grades.

The accompanying drawings illustrate the proposed stormwater servicing for the parking lot and driveways on site.

2 Background

Documents referenced in preparing this stormwater and servicing report for 301 Somme Street include:

- *City of Ottawa Sewer Design Guidelines* (SDG), City of Ottawa, December 2025, including all subsequent technical bulletins.
- *City of Ottawa Design Guidelines – Water Distribution*, City of Ottawa, December 2025, including all subsequent technical bulletins.
- *Design Guidelines for Drinking Water Systems*, Ministry of the Environment, Conservation, and Parks (MECP), 2008.
- *Fire Protection Water Supply Guideline* for Part 3 in the Ontario Building Code, Office of the Fire Marshal (OFM), October 2020.
- *Water Supply for Public Fire Protection*, Fire Underwriters Survey (FUS), 2020.
- *Stormwater Management Planning and Design Manual*, Ministry of the Environment, Conservation, and Parks (MECP), 2003.
- *Geotechnical Investigation – Proposed Commercial Development 301 Somme Street,* Paterson Group, July 2026.
- *Terrain Analysis and Hydrogeological Study – Proposed Commercial Development 301 Somme Street, Paterson Group, July 2026.*
- *Shields Creek Subwatershed Study*, Totten Sims Hubicki Associates, June 2004.
- *Fire Safety Plan – Proposed Bulk Propane Facility – 301 Somme Street, Stantec Consulting Ltd., 2026.*

3 Water Servicing

3.1 Background

The proposed site lies within an undeveloped block of the Hawthorne Industrial Park southeast of Rideau Road within the City of Ottawa. The proposed site does not lie within existing pressure zone boundaries of the City of Ottawa's water distribution system. The site is rural in context, and has not been provided with a piped water service connection for development, nor does an economical watermain connection option exist in proximity to the development for provision of required fire flows.

3.2 Proposed Domestic Water Servicing

Site domestic water supply is proposed to be provided through an existing on-site well previously established in the immediate proximity to the proposed vehicle service bay / site office building. A detailed assessment of well water design requirements for the proposed development was performed by Paterson Group and summarized in their Terrain Analysis and Hydrogeological Study.

Paterson's water supply assessment concluded that minimum well yield capable of supplying the daily water demand for the proposed uses is readily obtainable on-site. Similarly, Paterson's investigation concluded that the existing raw water supply is considered to be treatable to meet the requirements of the drinking water regulations. Based on the raw water quality data obtained, it was recommended that chlorine be introduced to existing well water to produce a free chlorine residual of at least 50 mg/L, and a standard residential water softener be installed to remove hardness / iron concentrations.

PEX piping is recommended for domestic water supply lines in order to minimize potential for corrosion of internal piping.

3.3 Fire Flow Demands

As the proposed private site lies outside of the municipal potable water distribution system, the required fire flow for the development has been based on requirements of the Ontario Building Code (OBC). Fire flow requirements are outlined in the 2024 Building Code Compendium Section A-3.2.5.7. Based on the site plan, the governing building for fire flow is anticipated to be the tank and equipment storage building intended for Group F Division 1 occupancy.

Fire flow demand was estimated based on a building of non-combustible construction type with fire-rated structural members based on OBC 3.2.2.72 for the required building size. The storage building footprint was used as the effective floor area, with an assumed building height of 6m. Given the highly structured and coordinated staffing required to operate a building under the Liquid Fuels Handling Code per Technical Standards and Safety Authority (TSSA) requirements, a 30% fire flow reduction has been applied per OBC section A-3.2.5.7 for buildings with "well-established and practiced fire safety plans". As noted in the Fire Safety Plan report, all staff within the site are expected to receive fire extinguisher and annual training on

emergency shutdown procedures, and the Owner is expected to develop an Emergency Response Plan to notify personnel and evacuate the site within 4 minutes to meet the above conditions.

Based on the above, the building's required fire flow volume was determined to be 336m3 at a minimum rate of flow of 9,000 L/min. Detailed fire flow calculations per the OBC methodology are provided in **Appendix A.**

Per the City of Ottawa's Technical Bulletin IWSTB-2024-05, required fire flows at the above noted rates under OBC methodology require additional review and special evaluation of required fire suppression storage volumes. In light of the above, a separate Fire Safety Plan (Stantec, 2026) was developed to ensure adequate on-site fire suppression storage exists for the proposed development.

Fire flow calculations per FUS methodology have also been included in **Appendix A**, which identify a required fire flow volume of 960m3. It is felt that required fire flows under FUS methodology are overconservative for the site use given consideration of occupancy charges in the calculation methodology, and for a 2-hour duration of fire flow which would extend well beyond anticipated fire suppression activities.

Per NFPA 1142, required fire flow in gallons equates to the building volume in cubic feet divided by the hazard class and multiplied by the construction class. Using a hazard class of 3 (flammable liquids) and a construction class of 0.75 (non-combustible) with the larger building volume (3483m2 x a conservative 6m building height), required fire flow volumes are 184,500 gallons or approximately 698m3. It is of note that this standard is to apply to buildings without automatic sprinkler protection, which would not be the case for the proposed development.

Fire flow calculations within the Fire Safety Plan and additional supplementary memo outlining the site fire fighting water design approach (see **Appendix A**) identify a required fire flow volume of 391.5m3 for the vehicle storage building through development of sprinkler requirements per NFPA 13, and suggest dedicated on-site fire water storage from a clean and reliable source. Tank and equipment storage shed fire flow volumes were estimated at approximately 336.5m3. In addition, a cooling water flow and storage calculation was provided identifying a potential supplemental cooling volume of approximately 102m3 for areas in proximity to the tank and equipment storage shed to be assessed during building detailed design phase to increase separation between fire areas to further reduce or eliminate the need for supplemental cooling volumes (total of 438.5m3).

3.4 Proposed Fire Water Servicing

It is proposed to provide the required fire flow volumes at the required rates determined by OBC calculations (conservative with respect to NFPA 13 demand rates) in the section above (minimum of two hydrants required). Provision of the required fire flows is to be via multiple dry hydrants installed in proximity to the on-site buildings and other fire protection areas according to City of Ottawa standard W54. Required dry (pump) hydrants are proposed to connect to the draw hydrant located at the proposed fire water storage described below.

The draw hydrant intake is to be installed adjacent to an interconnected series of 5 x 80,600L subsurface cisterns to provide the required on-site fire protection storage. The proposed layout is anticipated to provide 403m3 of storage, which is in excess of the required 391.5m3 for the worst case vehicle storage building. Spatial considerations have been made for an additional subsurface cistern (total of 6) to increase on-site storage volumes to approximately 484m3 to meet supplemental cooling volumes if identified at building detailed design. The cisterns are equipped with a 50mm water line fed from the proposed building domestic water feed to act as a top up should the cisterns experience losses from evaporation after initial filling. Perimeter subdrainage piping is to be installed around the cisterns to prevent buoyancy uplift from dislodging the overall system.

A conceptual hydraulic model was prepared for the pump hydrant water lines in consideration of provision of fire flows to a worst case single draw point identified in the Fire Fighting Water Design Approach memo of 1150gpm + 300gpm for cooling water (90.5L/s). As it is not known what apparatus will be supplied by OFS to charge the dry hydrant pump line, it was assumed that the apparatus could supply at minimum the fire demand rate noted at a pressure of 50psi at ground elevation of the proposed cisterns. As a reference, typically rated fire pumps for 1500gpm would provide such flows at 150psi. Results of the analysis demonstrate that even at 50 psi charge, the minimum 20psi residual pressure can be achieved at the fire flow demand rate. See model input/output files within **Appendix A** for additional details.

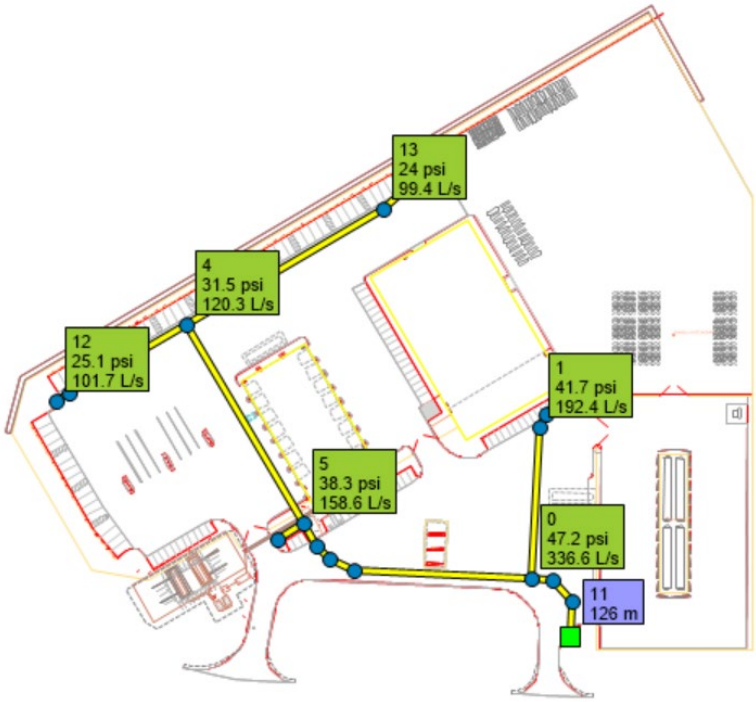

Figure 2: Available Fire Flows at 50psi Charge to Dry (Pump) Hydrant

4 Wastewater Servicing

4.1 Background

The proposed site lies within an undeveloped block of the Hawthorne Industrial Park southeast of Rideau Road within the City of Ottawa. The site is rural in context, and has not been provided with a sanitary sewer outlet for development, nor does an economical sewer connection option exist in proximity to the development.

4.2 Wastewater Servicing Design

Domestic sanitary flows from the site are proposed to discharge to an on-site sewage system (pretreatment tank, treatment unit, and Type 'A' leaching bed per OBC requirements) within the southwest quadrant of the site. Daily sanitary sewage flows are estimated at approximately 4,077L/day. For further details on the proposed sewage system, please see Paterson Group Terrain Analysis and Hydrogeological Study under separate cover.

4.3 Proposed Servicing

A 125 mm diameter sanitary sewer at 2% slope is proposed to service the vehicle storage bays and office building and will direct wastewater peak flows to the proposed sewage system. Due to proximity of the sewer to the existing well location to be used for domestic water service, the sewer service is to be sleeved through a 200mm PVC pipe and overlaid by rigid insulation to protect the service from freezing. Final sizing of the lateral is to be confirmed by the mechanical consultant. The proposed sanitary servicing to the sewage system is shown on **Drawing SSP-1**.

5 Stormwater Management and Servicing

5.1 Objectives

The goal of this stormwater servicing and management plan is to determine the measures necessary to control the quantity and quality of stormwater released from the proposed design to meet the criteria established during the consultation process with City of Ottawa staff, and to provide sufficient details required for approval.

5.2 Stormwater Management (SWM) Criteria

The Stormwater Management (SWM) criteria were established by combining current design practices outlined by the City of Ottawa Sewer Design Guidelines (SDG) (October 2012), the Ontario Ministry of the Environment, Conservation, and Parks (MECP) Stormwater Management Planning and Design Manual, South Nation Conservation Authority (SNC) Environmental Planning Policies, and through prior consultation with City of Ottawa staff by the proponent. The following summarizes the criteria, with the source of each criterion indicated in brackets:

General

- Use of the dual drainage principle (City of Ottawa SDG).
- Wherever feasible and practical, site-level measures should be used to reduce and control the volume and rate of runoff (City of Ottawa SDG).
- Assess impact of 2-year, 5-year, 10-year, and 100-year event outlined in the City of Ottawa Sewer Design Guidelines on the major and minor drainage systems (City of Ottawa SDG).
- The post-development discharge under design storm events (2-100 year storms) from the site are to be restricted to that of the previously approved Stormwater Management Report – Hawthorne Industrial Park by J.L. Richards & Associates, developed in accordance with the Shields Creek Subwatershed Study (City of Ottawa pre-consultation).
- Provide on-site water quality control with a minimum of 80 % TSS removal (City of Ottawa pre-consultation).

Storm Sewer and Inlet Control

- Minor system to be sized to capture at minimum runoff from the 2-year storm event (MECP, City of Ottawa SDG).
- Post-development peak discharge from the site will be limited to previously approved release rates for the 2-year, 5-year, 10-year, and 100-year design storm events (City of Ottawa pre-consultation).
- Sewer HGLs to be a minimum of 0.3m below proposed underside of footing elevations (City of Ottawa SDG).

Surface Storage and Overland Flow

- Overland flow to be directed within proposed rights-of-way to the downstream SWM pond (MECP, City of Ottawa SDG).
- 100-year surface HGL to be a minimum of 0.3 m below proposed building openings (City of Ottawa SDG).
- No surface ponding is to be permitted on roads/parking areas during the 2-year storm event (City of Ottawa SDG).
- Maximum depth of static ponding is not to exceed 0.35 m for design storm events (i.e., up to 100-year storm) (City of Ottawa SDG).
- Water must not encroach upon proposed building envelopes and must remain below all proposed building openings during the climate change event (City of Ottawa SDG).
- Provide adequate emergency overflow conveyance off-site (MECP, SDG).

5.3 Existing Conditions

The site forms part of several undeveloped parcels within the Hawthorne Industrial Park (HIP). Historically, runoff from the site sheet drained overland towards the northeast, discharging to the southerly roadside ditch along Rideau Road, and ultimately to the Findlay Creek Municipal Drain. The site has recently been subject to infilling at its northerly extents to provide a relatively flat development area and in anticipation of provision of positive drainage to the roadside ditches along Somme Street.

The *Stormwater Management Report - Hawthorne Industrial Park (HIPSWM)* (J.L Richards, 2009) identifies that runoff from the development is to be directed to the northerly roadside ditch along Somme Street, with eventual discharge to a previously constructed dry pond to the east of the development area. The dry pond was sized with sufficient capacity to control post-development peak runoff to pre-development levels for storm events ranging from the 2-year to the 100-year storm events based on IDF parameters outlined in the SDG. Ditches along Somme Street have been sized to convey 100-year runoff from serviced properties within the HIP under free-flowing conditions, and culverts within the ditch line have been sized to convey the 10-year peak flow rate without overtopping of the roadway embankment. Additionally, a ‘normal’ level of quality control protection (70% TSS reduction) has been previously provided for the Somme roadway via infiltration trench and perforated pipe system underlaying the ditches.

The HIPSWM report had prepared an analysis of the downstream dry pond through a SWMHYMO model with lumped catchment areas demonstrated on Figure 4 in **Appendix C**. Two scenarios were developed, Phase 1 which considers development of areas along Somme Street and further upstream, and Phase 2 that also includes development of a vacant future development block located immediately northeast of the development area. In both analyses the anticipated development was able to be serviced by a dry pond with an identical size and outlet structure, with Phase 2 incorporating an additional pond inlet solely for the purposes of servicing the additional development block.

Since issuance of the HIPSWM report, the underlying block legal fabric has been adjusted to suit development of the subject site. The current development area now forms part of Area 3 and 4 (the future development block) in the drainage area Figure 4. Linework for the figure was overlaid on the current development plan to confirm that the site now maintains approximately 5.322ha from overall 15.6ha Area 3 (34.1% of overall) and 0.764ha from the overall 12.2ha Area 4 (6.26% of overall). In the ultimate modeled scenario for the HIP, both areas were assigned an imperviousness of 71%.

In order to develop allowable release rates for the subject site, modeled runoff for both blocks were extracted from model outputs in the HIPSWM report, weighted based on the contributing area from the development over the overall block, and summed to a single value. Allowable release rates for the site are listed in the table below:

Table 5-1: Peak Allowable Discharge Rate

Design Storm	Area 3 Runoff (L/s)	Weighted Contribution (L/s)	Area 4 Runoff (L/s)	Weighted Contribution (L/s)	Allowable Release Rate (L/s)
25mm	484	165	585	37	**202**
2-year	753	257	941	59	**316**
5-year	1176	401	1375	86	**487**
10-year	1475	503	1687	106	**609**
25-year	1879	641	2109	132	**773**
50-year	2237	763	2470	155	**918**
100-year	2612	891	2793	175	**1066**

5.4 Proposed Stormwater Management Plan

As site imperviousness is expected to exceed the previously assumed values within the HIPSWM report, additional quantity storage is required to restrict post-development outflows to allowable rates. In addition, the HIPSWM report identifies the need for developments within the industrial subdivision to provide their own quality control (identified in the report to 'Normal' 70% TSS reduction, now increased to 80% per City of Ottawa requirements) via on-site hydrodynamic separator, or OGS. It is of note that between issuance of the ECA for the industrial subdivision works for stormwater management and the present that there has been a change in the procedural requirement for assessing TSS reduction through use of OGS units as sole point of quality control, which would limit typical installation of OGS units to providing substantially less than the required 80% reduction. In addition, due to the nature of the industrial development, additional spills containment controls are recommended to prioritize retention of runoff in the event of a spills-related emergency. Nevertheless, four OGS units have been proposed on-site within potential spill management areas (cardlock station, vehicular parking and storage areas) to provide additional points of hydrocarbon capture before discharge to proposed downstream quantity and quality control systems.

It is proposed to provide the required quantity and quality control in conjunction with recommended spill containment within a wet pond located adjacent to the site discharge point to the roadside ditch along Somme Street.

5.4.1 Modeling Rationale

A hydrologic analysis was conducted using PCSWMM software to assess the rate and volume of runoff anticipated during post-development rainfall events for each design storm. Intensity Duration Frequency (IDF) curves were sourced from Ottawa's Sewer Design Guidelines. These IDF curves were used to develop 2-year, 5-year, 10-year, 25-year, 50-year, and 100-year 12-hour SCS Type II distributions for consistency with that modeled within the HIPSWM report, as well as to develop the 2-year and 100-year 3-hour Chicago storm events for use in sizing on-site sewer systems and culverts. Two climate change event scenarios were also developed by adding 20% to rainfall intensities for the two 100-year storms. It is of note that the Shields Subwatershed study had considered the 3-hour Chicago distribution as to be the critical design event for the region. The 12-hour SCS distribution was additionally selected for analysis in consideration of the proposed wet pond facility in consideration of runoff volume to conservatively encompass known historical rainfall event volumes (12hr rainfall depth of 93.9mm in comparison to July 1979, August 1988 and August 1996 rainfall depths of 82.6mm, 80.6mm, and 73.9mm respectively).

Surface storage estimates were based on the final grading plan design (see **Drawing GP-1**). The following assumptions were applied to the detailed model:

- Hydrologic parameters as per Ottawa Sewer Design Guidelines, including Horton infiltration, Manning's 'n', and depression storage values.
- 12-hour SCS Storm distribution for the 2 through 100-year analysis to model 'worst-case' scenario in regards to on-site storage volume and to assess proposed SWM pond performance in comparing peak site outflows to allowable release rates.
- A 4-hour 25mm storm event and 3-hour Chicago storm distributions (2, 5, and 100-year events) were used to further evaluate the proposed SWM pond performance.
- Inflows from the upstream culverts which service lands tributary to the northerly Somme Street roadside ditch have been modeled as direct constant inflow based on results of the Rational Method calculation sheets in the HIPSWM report. HIPSWM calculated Inflows for the 100-year storm have been applied conservatively to the site modeled 25-year and larger storm events, and inflows for the 10-year storm event have been applied to the modeled 2 through 10-year events. As the ditches immediately downstream of the development have been sized to convey 100-year storm runoff and lie substantially above downstream dry pond 100yr HGL elevation of 85.92, no impacts on the proposed design from ditch tailwater are anticipated.
- Percent imperviousness calculated based on actual soft and hard surfaces on each subcatchment, converted to equivalent Runoff Coefficient using the relationship C = (Imp. x 0.7) + 0.2
- Subcatchment areas are defined from high-point to high-point where sags occur. Subcatchment width (average length of overland sheet flow) determined by dividing subcatchment area by subcatchment length (length of overland flow path measured from high-point to high-point), or where overland flow paths are irregular by multiplying the subcatchment area in hectares by 225.

- On-site minor system sized to convey the 2-year storm runoff without surcharging. Culverts sized to convey the 10-year storm runoff as determined within the PCSWMM model, and are sized to not overtop the adjacent roadway in consideration of runoff from the 100-year storm.
- Roadway subcatchments tributary to the Somme ditch adjacent to the development have been included within the PCSWMM model for consistency with ditch inflow calculations in the HIPSWM report.
- Number of catch basins and inlet locations based on servicing plan (**Drawing SSP-1**). Inlet 'rim' elevations have been modeled 0.5m higher than physical grate elevations to allow for ponding (and dynamic flow depths) to be modeled above the structure top of grate.

5.4.2 Input Parameters

Drawing SD-1 summarizes the discretized subcatchments used in the analysis of the proposed site, and outlines the major overland flow paths. The grading plans are also enclosed for review.

Appendices C3 and C4 summarize the modeling input parameters and results for the subject area; an example input and output file are provided for the 2-year and 100-year 3hr Chicago storm. For all other input files and results of storm scenarios, please examine the electronic model files provided with this report. This analysis was performed using PCSWMM, which is a front-end GUI to the EPA-SWMM engine. Model files can be examined in any program which can read EPA-SWMM files version 5.2.4.

5.4.2.1 Hydrologic Parameters

Table 5-2 presents the general subcatchment parameters used:

Table 5-2: General Subcatchment Parameters

Parameter	Value
Infiltration Method	Horton
Max. Infil. Rate (mm/hr)	76.2
Min. Infil. Rate (mm/hr)	13.2
Decay Constant (1/hr)	4.14
N Impervious	0.013
N Pervious	0.25
Dstore Imperv. (mm)	1.57
Dstore perv. (mm)	4.67
Zero Imperv. (%)	0

Table 5-3 presents the individual parameters that vary for each of the proposed subcatchments.

Table 5-3: Subcatchment Parameters

Name	Outlet	Area (ha)	Width (m)	Slope (%)	Imperv. (%)

BLDG	102A	0.183	41.1	2.0	100.0
L100A	100	0.230	51.8	2.5	45.7
L101A	105	0.366	82.3	1.5	95.7
L102A	103	0.158	35.5	1.5	100.0
L103A	103A	0.304	68.4	1.5	94.3
L104A	104	0.157	35.3	1.3	61.4
L105A	105	1.019	229.4	1.2	94.3
L107A	107	0.567	127.5	1.0	74.3
L108A	108A	0.612	137.7	1.5	77.1
L108B	108B	0.475	107.0	1.3	67.1
L110A	110	0.215	48.5	3.0	100.0
L111A	111	0.460	103.5	2.0	94.3
L112A	112	0.285	64.2	1.5	77.1
POND	POND-S	0.285	135.0	33.0	60.0
SOMME1	C1-I	0.240	261.0	3.0	100.0
SOMME2	CULV-DS	0.030	20.0	3.0	100.0
UNC-1	RIDEAU	0.414	315.0	3.0	0.0
UNC-2	C2-I	0.353	365.0	2.0	7.1

Table 5-4 summarizes the storage node parameters used in the model. Storage curves for each node have been created based on available volumes within surface storage as applicable. Rim elevations for each node correspond to the rim elevation of the associated area's drain or catch basin plus an additional offset to allow for surface storage to be processed within the model.

Table 5-4: Storage Node Parameters

Name	Invert El. (m)	Rim Elev. (m)	Depth (m)	Curve Name	Storage Curve
100	88.92	90.99	2.07	*	FUNCTIONAL
101	89.16	91.09	1.93	*	FUNCTIONAL
102	89.42	92.02	2.60	*	FUNCTIONAL
103	89.53	91.98	2.45	103V	TABULAR
103A	89.88	91.87	1.99	103AV	TABULAR
104	89.80	91.95	2.15	104V	TABULAR
105	89.40	91.08	1.68	105V	TABULAR
106	89.71	91.64	1.93	*	FUNCTIONAL
107	89.74	91.70	1.96	107V	TABULAR
108	90.02	91.63	1.62	*	FUNCTIONAL

108A	90.29	91.80	1.52	108AV	TABULAR
108B	90.26	91.80	1.54	108BV	TABULAR
109	89.69	92.15	2.46	*	FUNCTIONAL
110	89.85	91.80	1.95	110V	TABULAR
111	89.98	91.84	1.87	111V	TABULAR
112	89.96	91.87	1.92	112V	TABULAR
C1-I	88.81	90.01	1.20	*	FUNCTIONAL
C1-O	88.66	89.86	1.20	*	FUNCTIONAL
C2-I	89.65	90.85	1.20	*	FUNCTIONAL
C2-O	89.46	90.66	1.20	*	FUNCTIONAL
CULV-DS	89.82	91.02	1.20	*	FUNCTIONAL
CULV-US	89.97	91.27	1.30	*	FUNCTIONAL
POND-S	87.60	90.80	3.20	POND-V	TABULAR

5.4.2.2 Hydraulic Parameters

As per the Ottawa Sewer Design Guidelines (OSDG 2012), Manning's roughness values of 0.013 were used for sewer modeling, and a value of 0.024 used for culverts.

Storm sewers were modeled in PCSWMM to confirm flow capacities and hydraulic grade lines (HGLs) in the proposed condition with consideration of the SWM pond backwater acting on the sewers. An additional detailed storm sewer design sheet using the Rational Method is included in **Appendix B1**.

Exit losses at manholes were set for all pipe segments based on the flow angle through the structure. Exit losses were assigned as per City of Ottawa guidelines (Appendix 6b), see **Table 5.5** below.

Table 5.5: Exit Loss Coefficients for Bends at Manholes

Degrees	Coefficient
11	0.060
22	0.140
30	0.210
45	0.390
60	0.640
90	1.320
180	0.020

Entry losses for culverts have been applied using a coefficient value of 0.9 (end projecting, no headwall).

Table 5-8 below presents the parameters for the orifice and weir link objects in the model, which represent ICDs and pond outlet structure openings respectively. An additional weir represents overflow from on-site surface ponding within the southeast corner of the site, with spillage across the eastern access roadway to the Somme roadside ditch. ICDs representing circular orifice controls were assigned a discharge coefficient of 0.61, and rectangular weirs a coefficient of 1.67.

Table 5-6: Outlet/Orifice Parameters

Name	Inlet	Outlet	Inlet Elev.	Type	Diameter/Height (m)	Width (m)
107—106	107	106	89.74	CIRCULAR	0.375	-
OR1	POND-S	C1-I	89.30	CIRCULAR	0.102	-
OR2	POND-S	C1-I	89.90	RECTANGULAR	0.700	1.650
W1	105	C1-O	90.88	TRANSVERSE	0.20	6.0

5.4.3 Model Results

The following section summarizes the key hydrologic and hydraulic model results. For detailed model results or inputs, please refer to the example input and output files in **Appendix B2 and B3,** and the electronic model files provided.

5.4.3.1 Surface Storage

The following table presents the total surface water depths (static ponding depth + dynamic flow depth, if any) on the proposed on-site access and parking areas for the 100-year design storm and climate change storm event. The worst-case modeled surface water depths have been selected when comparing the SCS storm events and modeled Chicago storm scenarios.

Table 5.7: Maximum Surface Water Depths

Storage Node / Structure ID	Top of Grate Elevation (m)	100-Year		100-Year + 20%	
		Max Water Elevation (m)	Total Surface Ponding Depth (m)	Max Water Elevation (m)	Total Surface Ponding Depth (m)
100	90.99	90.43	0.00	90.50	0.00
101	91.09	90.49	0.00	90.57	0.00
102	91.61	90.64	0.00	90.80	0.00
103	91.48	90.75	0.00	90.95	0.00
103A	91.37	91.13	0.00	91.41	0.04
104	91.45	91.14	0.00	91.32	0.00
105	90.60	90.82	0.22	90.92	0.32
106	91.64	90.95	0.00	91.03	0.00

107	91.20	91.40	0.20	91.45	0.25
108	91.63	91.47	0.00	91.52	0.00
108A	91.30	91.55	0.25	91.60	0.30
108B	91.30	91.50	0.20	91.55	0.25
109	91.46	90.88	0.00	90.98	0.00
110	91.30	91.29	0.00	91.37	0.07
111	91.34	91.48	0.14	91.55	0.21
112	91.37	91.40	0.03	91.49	0.12

5.4.3.2 Hydrologic Results

The following tables demonstrate the peak outflow from each modeled outfall during the design storm (2-100yr storm) events. Flows from UNC-2 and UNC-1 denote uncontrolled flows from the perimeter of the site that, due to grading restrictions, are captured by the existing Somme Street or Rideau Road ditches respectively. As the property had historically drained northwards to Rideau, uncontrolled flows to the Rideau Road ditch are significantly reduced from existing conditions. Uncontrolled runoff has been considered in development of overall site discharge in relation to allowable site release rates. The required SWM facility volume and outflow structure configuration was determined through iteration of each event and sized to meet the site release rate target. Results demonstrate that the SWM pond can provide adequate storage to meet restricted release rates for all events except for the 25yr 12hr SCS and 50yr 12hr SCS storms, where outflows are increased 5% and 2% respectively above that demonstrated in the HIPSWM report. As the downstream development is able to manage runoff from the 100 year event storms where the discharge target is easily met, this minor increase is not expected to have deleterious results to downstream systems.

Table 5-8: Site Peak Discharge Rates

Event	Location	Peak Discharge Rate (L/s)	Target (L/s)
25mm, 4 Hour Chicago	OR1	15	
	OR2	0	
	W1	0	
	UNC-1	0	
	UNC-2	0	
	Total	**15**	**202**
2-Year, 3 Hour Chicago	OR1	16	
	OR2	24	
	W1	0	
	UNC-1	1	
	UNC-2	5	
	Total	**46**	**316**

5-Year, 3 Hour Chicago	OR1	17	
	OR2	127	
	W1	0	
	UNC-1	32	
	UNC-2	38	
	Total	**214**	**487**
100-Year, 3 Hour Chicago	OR1	15	
	OR2	517	
	W1	0	
	UNC-1	139	
	UNC-2	132	
	Total	**803**	**1066**
100-Year, 3 Hour Chicago +20%	OR1	15	
	OR2	709	
	W1	65	
	UNC-1	190	
	UNC-2	174	
	Total	**1153**	**-**
2-Year, 12 Hour SCS	OR1	17	
	OR2	69	
	W1	0	
	UNC-1	14	
	UNC-2	19	
	Total	**119**	**316**
5-Year, 12 Hour SCS	OR1	18	
	OR2	258	
	W1	0	
	UNC-1	48	
	UNC-2	49	
	Total	**373**	**487**
10-Year, 12 Hour SCS	OR1	18	
	OR2	383	
	W1	0	
	UNC-1	70	
	UNC-2	65	
	Total	**536**	**609**
25-Year, 12 Hour SCS	OR1	15	

	OR2	602	
	W1	0	
	UNC-1	92	
	UNC-2	83	
	Total	**792**	**773**
50-Year, 12 Hour SCS	OR1	15	
	OR2	700	
	W1	0	
	UNC-1	107	
	UNC-2	95	
	Total	**917**	**918**
100-Year, 12 Hour SCS	OR1	15	
	OR2	788	
	W1	0	
	UNC-1	123	
	UNC-2	107	
	Total	**1033**	**1066**
100-Year, 12 Hour SCS + 20%	OR1	15	
	OR2	936	
	W1	83	
	UNC-1	153	
	UNC-2	133	
	Total	**1320**	**-**
July 1979	OR1	15	
	OR2	767	
	W1	0	
	UNC-1	99	
	UNC-2	71	
	Total	**952**	**-**
August 1988	OR1	15	
	OR2	774	
	W1	0	
	UNC-1	133	
	UNC-2	104	
	Total	**1026**	**-**
August 1996	OR1	14	
	OR2	481	

	W1	0	
	UNC-1	68	
	UNC-2	81	
	Total	**644**	**-**

5.4.3.3 Hydraulic Results

The City of Ottawa requires that during major storm events, the maximum hydraulic grade line be kept at least 0.30 m below the underside-of-footing (USF) of any adjacent units connected to the storm sewer during design storm events. No basements are present within the proposed design, and only one structure maintains a connection to the storm sewer for roof drainage. As the building is not anticipated to have a foundation drainage connection, the USF elevation of the building has been considered at 0.3m below the proposed finished floor of elevation 92.00 (USF=91.70). The maximum hydraulic grade line (HGL) at the building service was modeled as 90.64 for the worst case 100-year storm event, and at 90.80 for the worst case climate change storm event. The HGL elevations in both scenarios remain at least 0.30m below the proposed building USF elevation.

5.5 SWM Pond Design

As noted in sections above, the SWM pond is located in the southerly quadrant of the site, and discharges to existing roadside ditches along Somme Street. The pond has been designed to provide water quality and quantity control for the site tributary area of 5.32ha.

5.5.1 Water Quality Control

The proposed SWM Pond has been designed to achieve an “enhanced” level of treatment of urban runoff according to City of Ottawa criteria – representing an 80% removal of total suspended solids (TSS).

As the proposed SWM pond is to be privately owned and operated, the end-of-pipe facility has been designed according to the recommendations of the Ministry of the Environment Stormwater Management Planning and Design Manual. **Table 5.9** shows the storage requirements recommended by the MECP as well as the volumes that can be provided by the proposed SWM Pond. Detailed calculations for the proposed SWM Pond are included in **Appendix B4**.

Table 5.9: SWM Pond – Water Quality Requirements

Enhanced Level of Protection – Overall Removal Efficiency of TSS 80%					
Drainage Area (ha)	Imperviousness Ratio (%)	Permanent Pool (m^3)		Extended Detention Storage (m^3)	
		Required	Provided	Required	Provided
5.32	84.0	1127	1261	213	401

For additional calculations related to drawdown time and erosion control, see Section 5.5.4.

5.5.2 Water Quantity Control

The proposed SWM Pond has been designed to attenuate post-development peak flows leaving the development site and entering the Somme Street ditch to ensure they are less than or equal to allowable flows for events up to the 100-year storm event.

Table 4.13 shows the post-development peak flow rate from the pond for the 12-hour SCS Type II distribution for the 2-year through 100-year storm events.

Table 4.10: Proposed Pond Post-Development Outflow

Scenario	Pond Outflow (L/s)
2-Year Storm	86
5-Year Storm	276
10-Year Storm	401
25-Year Storm	617
50-Year Storm	715
100-Year Storm	803

5.5.3 Pond Grading and Storage Design

The pond bottom has been set at 87.6 m in both the pond forebay and main cell. The permanent pool has been set at 89.3 m resulting in a permanent water depth of 1.7 m. The pond has been graded at maximum slope of 5:1 for 3.0 m on either side of the permanent pool, and at a maximum slope of 3:1 everywhere else, see **Drawing GP-1** for detailed grading.

The first pond outlet is a 102 mm orifice at invert at 89.3 m which was sized to retain the quality storage volume for a period greater than 24 hours as per MECP recommendations. The second pond outlet is a 1650 mm-wide by 700 mm-high weir with a weir crest at 89.90 m which was sized to meet allowable peak discharge flows to the Somme Street ditch. In event of emergency blockage of the pond outlet structure, the pond berm has been graded to provide an emergency overland flow path across the entire length of pond at elevation 90.80 to the adjacent roadside ditch line.

The stage-storage relationship for the entire facility was established using the average end area method as presented in **Appendix B4**.

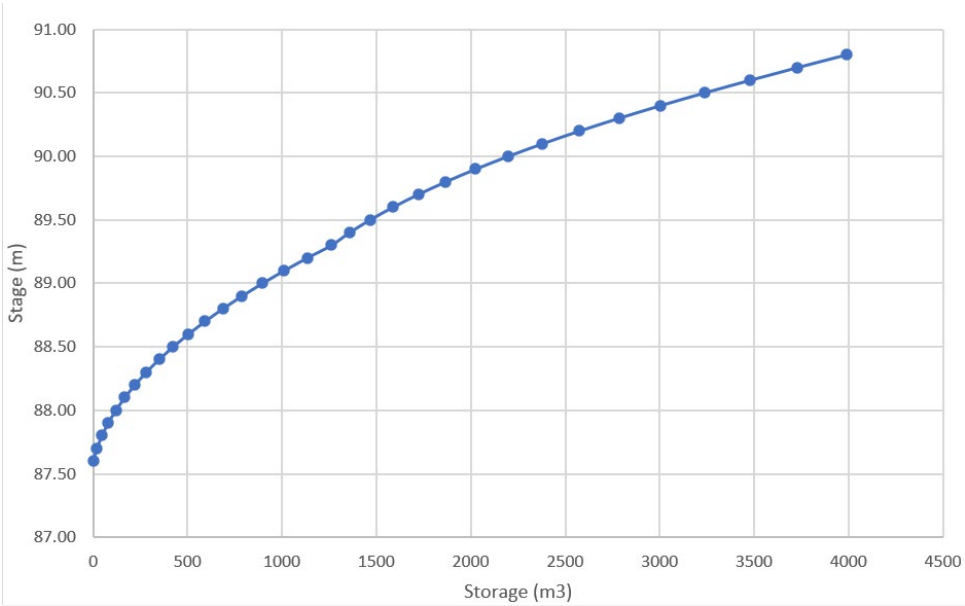

Figure 3. SWM Pond Stage-Storage Relationship

5.5.4 Slope Stability and Erosion Control

Due to the high inlet flow rates to the pond, erosion control and flow dampening measures are proposed to maintain slope stability and prevent sediment re-suspension. For side slope stability, the pond has been graded at a maximum slope of 5:1 for 3.0 m on either side of the permanent pool, and at a maximum slope of 3:1 everywhere else. Exposed slopes should be lined with biodegradable erosion control blankets and seeded with grass seed mulch once weather conditions are suitable for growth.

For erosion control purposes, as per the Ministry of the Environment Stormwater Management Planning and Design Manual, the 25 mm 4-hr Chicago event was modeled to confirm that the proposed orifice provides a minimum 24-hr drawdown time in the pond (the preferred range is 24-48 hours). Based on PCSWMM modeled results, 48 hours after the pond has reached its peak the water level has returned to within 1 cm of the permanent pool elevation, satisfying the MECP condition.

5.5.5 Inlet Design

The inlet of the SWM Pond is partially submerged, approximately 0.4 m below the permanent pool. This is due to site grading constraints and to provide sufficient cover for upstream storm sewers. A standing water elevation to the permanent pool elevation of 89.3 m has been modeled in PCSWMM to account for pond tailwater within proposed sewers.

5.5.6 Forebay Design

The purpose of the forebay is to act as the primary settling zone in the pond for the initial influx of coarse sediment and associated pollutants flushing off the sewershed. The forebay is designed to provide sufficient cross-section and length to reduce velocities and promote settling, minimize resuspension of settled solids, minimize percentage of overall permanent pool, provide sufficient sediment storage for infrequent clean out (roughly every 5 years), and have adequate accessibility and bottom-treatment for maintenance operations.

The required forebay characteristics dictate a required forebay settling length of 12.6 m. Similarly, the required forebay dispersion length is equal to 10.4 m. The provided length is approximately 17 m. The resulting average length to width ratio of the proposed configuration is approximately 3:1, also meeting MECP design recommendations. The provision of 1.7 m depth within the forebay provides for 0.7 m sediment accumulation prior to recommended cleanout while maintaining 1.0 m permanent pool depth. The designed sediment storage volume provided in the bottom 0.7 m corresponds to an estimated sediment removal frequency of approximately 5 years for the forebay. Detailed forebay calculations have been provided in **Appendix B4**.

The forebay berm to the main cell will be 0.3 m lower than the permanent pool at an elevation of 89.0 m and will be constructed of clay soil and rip-rap stone as shown on **Drawing PD-1**.

5.5.7 Outlet Design

The following subsections describe the pond outlet design. **Drawing PD-1** and **Drawing PD-2** illustrate the outlet structure in plan and sectional view.

The outlet will be located at the opposite end of the pond from the inlet and will discharge to the Somme Street ditch. A concrete outlet structure will house the required extended detention orifice, quantity control weir, and outlet pipe, including the associated maintenance infrastructure (i.e., sluice gates, etc.).

5.5.7.1 Extended Detention Control

The design of the required outlet structure incorporates a dual control configuration. Firstly, a 102 mm orifice provides an approximate 26-hour extended detention for quality control. The outlet structure maintains a reverse sloped pipe to ensure draw from deeper sections of the proposed pond for extended detention control. The entire extended detention volume is stored between 89.3 m and 89.9 m, as calculated below.

<u>Required Storage:</u>
Tributary Area = 5.32 ha
Extended Detention Storage = 40 m^3/ha
Storage = 5.32 x 40 = 213 m^3

<u>Provided Storage</u>:
Forebay area at PP (89.3 m) = 420 m^2
Main Cell area at PP (89.3 m) = 901 m^2
Pond area at 89.9 m = 1646 m^2

Provided Depth = 89.9 – 89.3 = 0.60 m
Provided Extended Detention Active Volume = 764 m^3

5.5.7.2 Flow Control Weir

Quantity control of the pond discharge above the extended detention elevation is provided by a flow control weir within the outlet structure. This weir has been incorporated into the outlet structure to lower the water levels in the pond, while meeting the target peak outflows to the Somme Street ditch. A 1,650mm-long by 700 mm-high weir with invert at 89.9 m is proposed to meet quantity control requirements.

5.5.7.3 Stage-Discharge Relationship

A stage-discharge relationship was estimated using standard orifice and weir equations as outlined in **Appendix B4**. The resulting stage-discharge relationship is presented in **Figure 11** below. Note that the PCSWMM model outputs reduced discharge values for larger storm events in consideration of tailwater elevations within the receiving ditch.

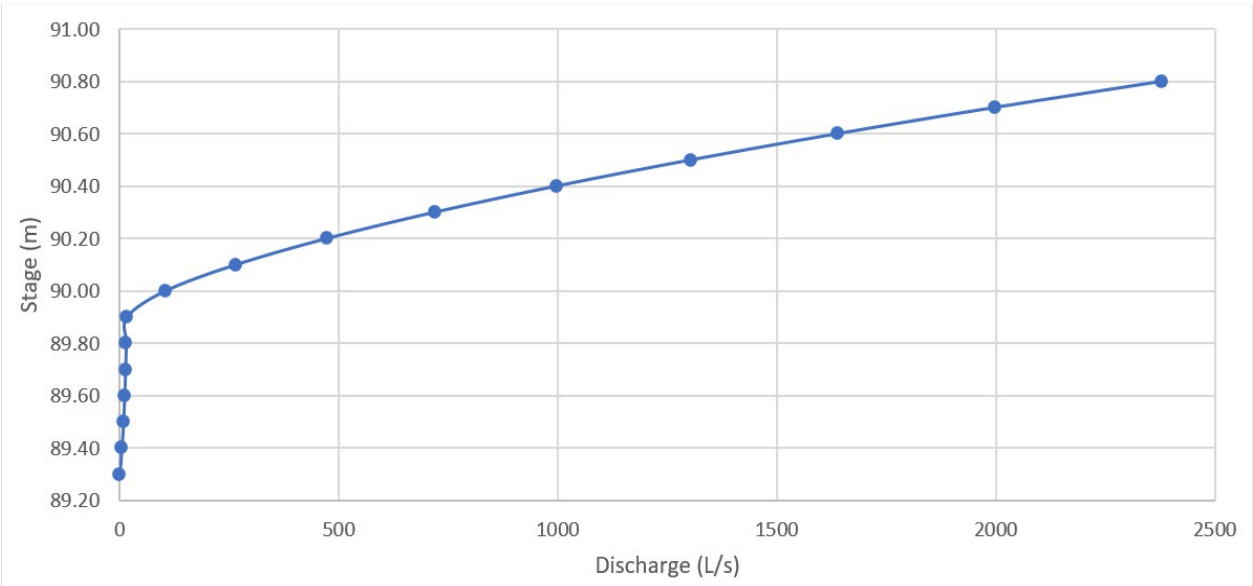

Figure 4. SWM Pond Stage-Discharge Relationship

5.5.7.4 Outlet Sewer

A 900mm x 1800mm rectangular concrete sewer conveys pond discharge from the outlet structure to the outlet headwall discharging directly to the Somme Street ditch. The receiving ditch is further lined with rip-rap stone for erosion control as shown on **Drawing PD-1.**

5.5.8 Pond Performance

As **Table 5.11** indicates, the water quality objectives of the SWM facility are met by providing extended detention of 24-48 hours and exceeding the MECP recommended water quality volumes.

Table 5.11: SWM Facility Operational Characteristics

SWM Basin Parameters	Basin Value
Total Contributing Area	5.32 ha
Imperviousness of Contributing Area (of Sewershed Area)	84.0 %
Unit Area Storage Volume Requirements as per SWMPD Manual	251.8 m^3/ha
Required Total Water Quality Volume	1340 m^3
Wet Pond Bottom Elevation	87.6 m
Required Permanent Pool Volume	1127 m^3
Permanent Pool Volume Provided	1241 m^3
Permanent Pool Elevation	89.3 m
Permanent Pool Surface Area	1,253 m^2
Required Extended Detention Volume	213 m^3
Extended Detention Volume Provided	752 m^3
Peak Release Rate for Extended Detention	0.016 m^3/s
Extended Detention Drawdown Time	25 hours
Extended Detention Elevation	89.9 m
5-Year Storm Maximum Ponding Level (12-hour SCS Type II)	90.11 m
5-Year Storm Peak Pond Release (12-hour SCS Type II)	0.276 m^3/s
100-Year Storm Maximum Ponding Level (12-hour SCS Type II)	90.33 m
100-Year Storm Peak Pond Release (12-hour SCS Type II)	0.803 m^3/s
100-Year Storm Active Volume Required (12-hour SCS Type II)	1,967 m^3
Top of Berm (minimum grade of surrounding properties)	90.8 m
Forebay Parameters	
Forebay Bottom Elevation	87.6 m
Sediment Accumulation Depth	0.7 m
Forebay Depth from Permanent Pool	1.7 m
Required Forebay Length	12.6 m
Actual Forebay Length	17 m
Clean Out Frequency	~5 years
Outlet Parameters	
Quality Orifice Size	102 mm
Quality Orifice Invert	89.30 m
Quantity Weir Size	1,650mm-W x 700mm-H
Quantity Weir Crest Invert	89.90 m

5.5.9 Spill Containment

The proposed pond is to form part of the overall spills containment strategy for the site required for compliance with requirements of the Technical Standards and Safety Authority (TSSA) including those under the Liquid Fuels Handling Code.

The proposed pond outlet structure is equipped with a reverse sloped pipe on the quality control outlet in order to ensure minor spills of floatable fuels and debris do not migrate to downstream ditches under normal operating conditions. The pond forebay provides additional settling and dispersion lengths to allow for heavier sediment or dense liquids to be trapped within the pond forebay behind the impermeable forebay berm.

The pond bottom is equipped with a 0.75m thick clay layer (representing a percolated flow travel rate of above the 48hr maximum extended detention timeframe at 15mm/hr high estimate for clay) underlaid by filter fabric and an impermeable geomembrane to prevent groundwater ingress to the pond, and also prevent pond exfiltration to surrounding soils, limiting contaminant transport.

Oil/Grit separator manufactured treatment devices (Stormceptor EF04 and EF05 units) have been proposed to capture runoff from the tank and equipment storage yard, vehicular parking areas, and the cardlock facility to allow for oils and floatables capture closer to point of source without encumbering the wet pond. OGS units have been sized to provide a minimal level of TSS reduction (50%) based on ETV particle size distributions, and with retained oil volumes as shown on manufacturer supplied details within **Appendix B5**.

Finally, the pond outlet pipe is to maintain an automated sluice gate within the outlet structure for shielding from the elements. The sluice gate is to be designed by the mechanical & electrical consultants under separate cover to allow for emergency shutoff of any pond outflow should a major spill be identified by site operations staff. In this manner, runoff from fire suppression activities will be transported by on-site sewer and drainage piping to the pond for safe containment and removal without adverse effects to downstream stormwater systems.

5.5.10 SWM Pond Operations and Maintenance

As with any SWM facility, maintenance will be required to ensure the operational efficiency and functionality of the proposed SWM Pond. As this is a private site, the developer will be responsible for any maintenance/operation/monitoring works. The preparation of an Operations, Maintenance and Monitoring Manual for the SWM Pond will be required after issuance of an MECP ECA for the works based on criteria outlined in the ECA, and submitted under separate cover.

5.5.10.1 Maintenance Program

The following summarizes the key components to be considered for the maintenance program:

- **Inventory of Stormwater System Components** (e.g., conveyance locations, elevations, outfalls, contributing drainage area, receiving watercourse, control structure components and specifications, material types, vegetative species, and other pertinent information)
- **Periodic and Scheduled Inspections** (performed on a regular basis as determined in consultation with the City, MECP, and conservation authority)
- **Maintenance Scheduling and Performance** (e.g., vegetation/landscaping maintenance, trash and debris removal, dewatering, sediment removal and disposal, pond bank stabilization, inlet/outlet structure repairs, equipment testing/troubleshooting, etc.)
- **Documentation and Reporting** (e.g., frequent inspection reports to the municipality and conservation authority during construction).
- **Emergency Response** (e.g., discussion of emergency pond controls, operations practices during emergency shutdown procedures for spill control)

5.5.10.2 Monitoring

Monitoring of the proposed SWM Pond will be conducted to ensure proper hydraulic and water quality performance of the facility as designed. A detailed monitoring plan will be prepared following the receipt of MECP Environmental Compliance Approval (ECA). Monitoring criteria outlined in the MECP ECA, as required by the City of Ottawa and OFS for fire suppression qualities of the pond, and per site-wide spill control procedures will be used to prepare a monitoring plan for the facility.

5.5.10.3 SWM Pond Dewatering Procedure

A 300 mm diameter opening complete with a sluice gate at elevation 87.6 m has been incorporated within the outlet structure to allow for the water level in the pond main cell to be drained completely by lowering a sump pump into the outlet structure and directing pumping discharge into the outlet pipe or other approved location for disposal. In addition, the forebay berm has been designed to be impervious with clay to allow for water level separation between the forebay and the main cell. A drawdown structure has been provided next to the forebay berm with a 300 mm diameter pipe connecting the bottom of the forebay to the drawdown structure and a second 300 mm diameter pipe connecting the drawdown structure to the bottom of the main cell. Sluice gates for both pipes have been incorporated within the drawdown structure to facilitate maintenance. As the forebay bottom and the main cell bottom are at the same elevation, the forebay could be drained by gravity into the main cell once the main cell is empty, by opening both sluice gates. Alternatively, a sump pit has been provided in the drawdown structure to allow for the forebay to be drained with a sump pump from the drawdown structure. It is of note that full draw down of the pond will temporarily remove available site water storage for fire suppression within the pond and will dewater connected dry hydrants. Appropriate measures for emergency fire suppression must be in place before pond dewatering.

5.5.10.4 Sediment Removal and Storage

The pond forebay area is located such that sediment removal activities can be conducted with access from the north and west end of the forebay.

Sediment removal is estimated to be required at approximately 5-year intervals or at a sediment accumulation depth of 0.7 m in the forebay. Sediment accumulation within the forebay is variable and dependent on many factors including the condition of the tributary lands and the frequency of rainfall events. Therefore, sediment removal may be required at shorter or longer intervals than 5 years. Monitoring of sediment depth should be conducted regularly, and a hydrometric survey should be completed at regular intervals to confirm sediment accumulation rates. Sediment accumulation within the main cell will occur at lower rates and therefore require less frequent clean-outs than the forebay cell.

Any sediment removed from the forebay is expected to be immediately removed and disposed of off-site, and must be analyzed under Ontario Regulation 347 criteria. Analytical results must meet inert fill requirements if the sediment is to be used for land application and meet non-hazardous requirements as per the TCLP leachate test in O.Reg. 347 if it is to be disposed of in a municipal landfill.

5.6 Water Balance

As identified in the Shields Creek Subwatershed Study (SCSS), groundwater recharge for the overall Hawthorne Industrial Park development was intended to provide subsurface base flow into the receiving Findlay Creek. The HIPSWM report identifies that construction fill operations on site have been active since 1994. The report further clarifies that the soil component of the fill exhibits the characteristics of silty clay, with varying composition affecting its permeability in localized areas, making groundwater recharge behaviour within the HIP difficult to determine. The MECP does not endorse the use of infiltration basins on lands zoned for industrial use as there is an increased risk of groundwater contamination should a spill occur on site.

Nonetheless, options for infiltration were developed at time of preparation of the HIPSWM report that were subject to difficulty due to high groundwater tables and limited infiltration rates of subdivision soils. Representatives of the City of Ottawa and SNC were consulted, and it was concluded that groundwater balance targets from the SCSS would be difficult to achieve, and that on-site infiltration strategies would jeopardize groundwater quality and natural ecological integrity of receiving waters. It was decided by approval authorities for the HIP development that the requirement for water balance would be waived (see excerpts in **Appendix C**).

6 Site Grading

The project limit area of the site measures approximately 6.05 ha in area. A detailed site servicing and grading plan (see **Drawing GP-1**) has been prepared to satisfy the stormwater management requirements described in **Section** 5 and to allow for positive drainage away from the face of the proposed building.

The topographic survey plan indicates that the site has been recently subject to infilling activity, with site drainage now occurring via sheet flows generally to the southeast, with a high (roughly 10m in some sections) embankment along the property's northwest boundary with Rideau Street. This embankment is to be managed under proposed conditions through construction of an on-site retaining wall with design by others (see Paterson Group Geotechnical Investigation Report PG7567 for details).

The site servicing and grading plan satisfies the grading and drainage objectives for the proposed development site. The proposed grading respects the existing grades at the property lines and provides adequate overland flow routes to municipal rights-of-way (Somme Street). The site's eastern property boundary is proposed to be raised above existing conditions with fill being placed outside of the current development block. This fill has been identified to and is acceptable to the property owner (Tomlinson Group) who is also providing the current development block for sale to W.O. Stinson & Son Ltd.. The site grading has been designed to maintain the existing drainage patterns for the non-surface storage areas.

7 Utilities

Overhead (OH) hydro-wires run parallel to the westerly portion of the site along the Somme Street right of way, adjacent to the project limit area. Utilities within the work area (pole anchors) may require temporary relocation during construction. The existing utility poles within the public right of way are to be protected during construction.

Being part of an industrial development subdivision, Hydro Ottawa, Bell, Rogers, and Enbridge servicing is readily available through existing infrastructure to service this site. The exact size, location, and routing of utilities will be finalized after design circulation. Existing overhead wires and utility plants may need to be temporarily moved/reconfigured to allow sufficient clearance for the movement of heavy machinery required for construction of the adjacent septic system. The relocation of existing utilities will be coordinated with the individual utility providers upon design circulation.

8 Approvals

The proposed development lies on a private site as one lot or parcel of land and is considered an industrial use. As such, the site is subject to the Ministry of the Environment, Conservation and Parks (MECP) Environmental Compliance Application (ECA) process. An existing ECA has been established for sewage and stormwater management works within the downstream Hawthorne Industrial Park (HIP), to which the site is to discharge. The ECA identifies that individual sites discharging to the HIP are required to not only obtain approval per section 53 of the OWRA, but also amend the existing ECA to demonstrate adequate quantity and quality of site discharge to the overall collection system.

For ground or surface water volumes being pumped during the construction phase, typically between 50,000 to 400,000 L/day, it is required to register on the Environmental Activity and Sector Registry (EASR). It is possible that groundwater may be encountered during the pond excavation on this site. A minimum of two to four weeks should be allotted for completion of the EASR registration and the preparation of the Water Taking and Discharge Plan by a Qualified Person as stipulated under O.Reg. 63/16. An MECP Permit to Take Water (PTTW), which is required for dewatering volumes exceeding 400,000L/day, is not anticipated for the site.

9 Erosion and Sediment Control During Construction

To protect downstream water quality and prevent sediment build-up in catch basins and storm sewers, erosion and sediment control measures must be implemented during construction. The following recommendations will be included in the contract documents and communicated to the Contractor.

1. Implement best management practices to provide appropriate protection of the existing and proposed drainage system and the receiving water course(s).
2. Limit the extent of the exposed soils at any given time.
3. Re-vegetate exposed areas as soon as possible.
4. Minimize the area to be cleared and grubbed.
5. Protect exposed slopes with geotextiles, geogrid, or synthetic mulches.
6. Install silt barriers/fencing around the perimeter of the site as indicated in **Drawing ECDS-1** to prevent the migration of sediment offsite.
7. Install trackout control mats (mud mats) at the entrance/egress to prevent migration of sediment into the public ROW.
8. Provide sediment traps and basins during dewatering works.
9. Install sediment traps (such as SiltSack® by Terrafix) between catch basins and frames.
10. Schedule the construction works at times which avoid flooding due to anticipated significant rainfall (daily rainfall above 90th percentile rainfall event).

The Contractor will also be required to complete inspections and guarantee the proper performance of their erosion and sediment control measures at least after every rainfall. The inspections are to include:

- Verification that water is not flowing under silt barriers.
- Cleaning and changing the sediment traps placed on catch basins.

Refer to **Drawing ECDS-1** for the proposed location of silt fences, sediment traps, and other erosion control measures.

10 Geotechnical Investigation

A geotechnical investigation report was prepared by Paterson Group on August 14, 2025, to provide an assessment of the subsurface conditions for the proposed development. The subsurface profile generally consists of approximately 2.3 m to 10 m thickness of fill, underlaid by a layer of clayey silt to silty clay and/or silty sand. Fill material was observed to consist of silty sand/silty clay with varying amounts of organics, gravel, asphalt, concrete and bedrock fragments. Bedrock is anticipated between 5.3 to 12m below ground surface.

Based on Paterson's recommendations, the site is suitable for the proposed development. The proposed industrial building is recommended to be founded on conventional spread footings placed on existing fill which has already undergone a ground improvement program. Due to presence of a silty clay deposit, the site is subject to a permissible grade raise restriction of 2 m outside of ground improvement program limits.

The recommended rigid pavement structure is further presented in **Table 10-1** below.

Table 10-1: Recommended Pavement Structure

Material	Car Only Parking Areas (mm)	Access Lanes/Local Roadways, Loading Areas, and Heavy Truck Parking Areas (mm)
Wear Course – Superpave 12.5 Asphaltic Concrete	50	40
Binder Course – Superpave 19.0 Asphaltic Concrete	-	50
BASE – OPSS Granular A Crushed Stone	150	150
SUBBASE – OPSS Granular B Type II	300	450

Refer to the geotechnical report excerpts attached in **Appendix C** and the full report as part of the site submission package for further details.

11 Conclusions

11.1 Water Servicing

An existing on-site private well has sufficient capacity to meet domestic demands for the site per Terrain Analysis and Hydrogeological Report by others. Required fire flows for on-site fire suppression are to be met by multiple on-site dry hydrants fed from a privately maintained subsurface cistern. The cistern has sufficient water volume to meet fire flow requirements as determined by NFPA 13 methodology.

11.2 Sanitary Servicing

The proposed sanitary sewer service will consist of a 125 mm diameter sanitary service lateral sleeved through a 200mm pipe to direct discharge to a proposed on-site sewage treatment and disposal system. Sizing and design of the sewage system are by others and as noted in the Terrain Analysis and Hydrogeological Study.

11.3 Stormwater Servicing and Management

Surface storage at catch basins within parking areas and within a proposed wet pond stormwater management facility has been proposed to limit the stormwater discharge rate to peak allowable release rates as identified by the overarching Stormwater Management Report for the Hawthorne Industrial Park. The remaining site area not identified for redevelopment drains uncontrolled as per existing conditions and ultimately to the existing ditch along Rideau Road. The proposed wet pond provides sufficient storage to meet water quality and quantity requirements per MECP and City of Ottawa criteria. Spill control measures are incorporated within the proposed pond for additional protection to downstream watercourses. Amendment to the subdivision ECA as well as a separate ECA via direct submission to the MECP is required for site development in relation to storm sewers / stormwater management.

11.4 Grading

Site grading has been designed to provide an adequate emergency overland flow route and adhere to the permissible grade raise restrictions outlined in the geotechnical investigation.

11.5 Geotechnical Investigation

Based on the geotechnical investigation, the site is considered suitable for the proposed development. The proposed industrial building is recommended to be founded on conventional spread footings placed over existing fill. Due to presence of a silty clay deposit, the site is subject to a permissible grade raise restriction of 2 m.

Appendices

Appendix A Water Servicing

A.1 OBC and FUS Fire Flow Demand Calculations

Fire Flow Calculations as per Ontario Building Code 2024 (Appendix A)

Job#	160402123	Designed by:	DT
Date	21-Aug-25	Checked by:	PM
		Description:	Tank & Storage Bldg

$Q = KVS_{tot}$

Q = Volume of water required (L)
V = Total building volume (m3)
K = Water supply coefficient from Table 1
S_{tot} = Sotal of spatial coefficeint values from property line exposures on all sides as obtained from the formula

$S_{tot} = 1.0 + [S_{side1} + S_{side2} + S_{side3} + S_{side4}]$

1	Type of construction	Building Classification		Water Supply Coefficient
	Non-Combustible with Fire-Resistance Ratings	F-1		23
2	Area of one floor (m^2)	number of floors	height of ceiling (m)	Total Building Volume (m^3)
	3483	1	6	20,898
3	Side	Exposure Distance (m)	Spatial Coefficient	Total Spatial Coeffiecient
	North	30	0	1
	East	30	0	
	South	30	0	
	West	36.5	0	
4	Established Fire Safety Plan?	Reduction in Volume (%)		Total Volume Reduction
	yes	30%		30%
5				**Total Volume 'Q' (L)**
				336,458
				Minimum Required Fire Flow (L/min)
				9,000

*NOTE: Buildings adequately spaced to ensure no spatial coefficient contribution

Average height of 6.0m assumed.

Fire Flow Calculations as per Ontario Building Code 2024 (Appendix A)

Job#	160402123	Designed by:	DT
Date	21-Aug-25	Checked by:	PM
		Description:	Service Bays

$Q = KVS_{tot}$

Q = Volume of water required (L)
V = Total building volume (m3)
K = Water supply coefficient from Table 1
S_{tot} = Sotal of spatial coefficeint values from property line exposures on all sides as obtained from the formula

$S_{tot} = 1.0 + [S_{side1} + S_{side2} + S_{side3} + S_{side4}]$

1	Type of construction	Building Classification		Water Supply Coefficient
	Non-Combustible with Fire-Resistance Ratings	E, F-2		17
2	Area of one floor (m^2)	number of floors	height of ceiling (m)	Total Building Volume (m^3)
	1662	1	6	9,972
3	Side	Exposure Distance (m)	Spatial Coefficient	Total Spatial Coeffiecient
	North	30	0	1
	East	36.5	0	
	South	30	0	
	West	30	0	
4	Established Fire Safety Plan?	Reduction in Volume (%)		Total Volume Reduction
	yes	30%		30%
5				**Total Volume 'Q' (L)**
				118,667
				Minimum Required Fire Flow (L/min)
				3,600

*NOTE: Buildings adequately spaced to ensure no spatial coefficient contribution

Average height of 6.0m assumed.

FUS Fire Flow Calculation Sheet - 2020 FUS Guidelines

Stantec Project #: 160402123
Project Name: 301 Somme
Date: 8/21/2025
Fire Flow Calculation #: 1
Description: Tank & Equipment Storage Building

Notes: OBC F-1 building per 3.2.2.73

Step	Task	Notes								Value Used	Req'd Fire Flow (L/min)
1	Determine Type of Construction	Type II - Noncombustible Construction / Type IV-A - Mass Timber Construction								0.8	-
2	Determine Effective Floor Area	Sum of Two Largest Floors + 50% of Six Additional Floors					Vertical Openings Protected?			NO	-
		3483	0	0	0	0	0	0	0	3483	-
3	Determine Required Fire Flow	($F = 220 \times C \times A^{1/2}$). Round to nearest 1000 L/min								-	10000
4	Determine Occupancy Charge	Rapid Burning								25%	12500
5	Determine Sprinkler Reduction	Conforms to NFPA 13								-30%	-5000
		Non-Standard Water Supply or N/A								0%	
		Fully Supervised								-10%	
		% Coverage of Sprinkler System								100%	
6	Determine Increase for Exposures (Max. 75%)	Direction	Exposure Distance (m)	Exposed Length (m)	Exposed Height (Stories)	Length-Height Factor (m x stories)	Construction of Adjacent Wall	Firewall / Sprinklered ?		-	-
		North	> 30	0	0	0-20	Type V	NO		0%	0
		East	> 30	0	0	0-20	Type V	NO		0%	
		South	> 30	0	0	0-20	Type V	NO		0%	
		West	> 30	0	0	0-20	Type V	NO		0%	
7	Determine Final Required Fire Flow	Total Required Fire Flow in L/min, Rounded to Nearest 1000L/min									8000
		Total Required Fire Flow in L/s									133.3
		Required Duration of Fire Flow (hrs)									2.00
		Required Volume of Fire Flow (m^3)									960

FUS Fire Flow Calculation Sheet - 2020 FUS Guidelines

Stantec Project #: 160402123
Project Name: 301 Somme
Date: 8/21/2025
Fire Flow Calculation #: 2
Description: Service Bays

Notes: OBC F-2 building per 3.2.2.81

Step	Task	Notes								Value Used	Req'd Fire Flow (L/min)
1	Determine Type of Construction	Type II - Noncombustible Construction / Type IV-A - Mass Timber Construction								0.8	-
2	Determine Effective Floor Area	Sum of Two Largest Floors + 50% of Six Additional Floors					Vertical Openings Protected?			NO	-
		1662	0	0	0	0	0	0	0	1662	-
3	Determine Required Fire Flow	($F = 220 \times C \times A^{1/2}$). Round to nearest 1000 L/min								-	7000
4	Determine Occupancy Charge	Rapid Burning								25%	8750
5	Determine Sprinkler Reduction	Conforms to NFPA 13								-30%	-3500
		Non-Standard Water Supply or N/A								0%	
		Fully Supervised								-10%	
		% Coverage of Sprinkler System								100%	
6	Determine Increase for Exposures (Max. 75%)	Direction	Exposure Distance (m)	Exposed Length (m)	Exposed Height (Stories)	Length-Height Factor (m x stories)	Construction of Adjacent Wall	Firewall / Sprinklered ?		-	-
		North	> 30	0	0	0-20	Type V	NO		0%	0
		East	> 30	0	0	0-20	Type V	NO		0%	
		South	> 30	0	0	0-20	Type V	NO		0%	
		West	> 30	0	0	0-20	Type V	NO		0%	
7	Determine Final Required Fire Flow	Total Required Fire Flow in L/min, Rounded to Nearest 1000L/min									5000
		Total Required Fire Flow in L/s									83.3
		Required Duration of Fire Flow (hrs)									1.75
		Required Volume of Fire Flow (m^3)									525

A.2 Fire Suppression Hydraulic Analysis

```
[TITLE]
[JUNCTIONS]
;ID              Elev         Demand       Pattern
;--------------- ------------ ------------ ----------------
0                90.99        0
1                91.566       0
2                91.617       0
3                91.796       0
4                91.599       0
5                91.844       0
6                91.491       0
7                91.37        0
8                91.217       0
9                90.889       0
10               90.762       0
12               91.837       0
13               91.916       0
14               91.878       0
15               91.732       0
J1               91.813       0
J2               91.887       0

[RESERVOIRS]
;ID              Head         Pattern
;--------------- ------------ ----------------
11               126.03

[TANKS]
;ID              Elevation    InitLevel    MinLevel     MaxLevel     Diameter     MinVol       VolCurve
    Overflow
;--------------- ------------ ------------ ------------ ------------ ------------ ------------
---------------- --------

[PIPES]
;ID              Node1            Node2            Length       Diameter     Roughness    MinorLoss
Status
;--------------- ---------------- ---------------- ------------ ------------ ------------ ------------
------
1000             1                0                61.075       200          110          0            Open
```

```
1001             2                1                6            150          100          0            Open

1002             3                2                7.206        150          100          0            Open

1003             5                4                93.376       200          110          0            Open

1004             6                5                10.528       200          110          0            Open

1005             7                6                7.143        200          110          0            Open

1006             8                7                10.693       200          110          0            Open

1007             0                8                72.173       200          110          0            Open

1008             9                0                8.337        200          110          0            Open

1009             10               9                12           200          110          0            Open

1010             11               10               14.77        200          110          0            Open

1013_1           14               J2               5            150          100          0            Open

1012             13               4                92.425       200          110          0            Open

1014             5                15               12.118       150          100          0            Open

1011_1           4                J1               55.762       200          110          0            Open

1011_2           J1               12               5            150          100          0            Open

1013_2           J2               13               16.28        200          110          0            Open

[PUMPS]
;ID              Node1            Node2            Parameters
;--------------- ---------------- ---------------- ------------

[VALVES]
```

```
;ID              Node1            Node2            Diameter     Type Setting      MinorLoss
;--------------- ---------------- ---------------- ------------ ---- ------------ ------------

[DEMANDS]
;Junction        Demand       Pattern          Category
;--------------- ------------ ---------------- ----------------

[STATUS]
;ID              Status/Setting
;--------------- ----------------

[PATTERNS]
;ID              Multipliers
;--------------- ----------------

[CURVES]
;ID              X-Value      Y-Value
;--------------- ------------ ------------
;PUMP:
P1               0            147.7
P1               94.6         105.5
P1               142          68.6
;VOLUME:
T1               0            0
T1               3.2          80.6

[ENERGY]
Global Efficiency   75
Global Price        0
Demand Charge       0

[EMITTERS]
;Junction        Coefficient
;--------------- ----------------

[QUALITY]
;Node            InitQual
;--------------- ----------------
```

```
[SOURCES]
;Node            Type         Quality      Pattern
;--------------- ------------ ------------ ----------------

[REACTIONS]
Order Bulk             1
Order Tank             1
Order Wall             1
Global Bulk            0
Global Wall            0
Limiting Potential     0
Roughness Correlation  0

[REACTIONS]
;Type     Pipe/Tank        Coefficient
;-------- ---------------- ----------------

[MIXING]
;Tank            Model
;--------------- ------------

[OPTIONS]
Units               LPS
Headloss            H-W
Specific Gravity    1.0
Viscosity           1.0
Trials              40
Accuracy            0.001
CHECKFREQ           2
MAXCHECK            10
DAMPLIMIT           0
Unbalanced          Continue 10
Pattern             1
Demand Multiplier   1.0
Emitter Exponent    0.5
Quality             None mg/L
Diffusivity         1.0
Tolerance           0.01
```

```
[REPORT]
Status              No
Summary             No
Page                0

[TIMES]
Duration            00:00
Hydraulic Timestep  01:00
Quality Timestep    00:05
Pattern Timestep    01:00
Pattern Start       00:00
Report Timestep     01:00
Report Start        00:00
Start ClockTime     12 am
Statistic           NONE

[TAGS]

[COORDINATES]
;Node            X-Coord          Y-Coord
;--------------- ---------------- ----------------
0                379082.844       5018979
1                379085.906       5019040
2                379088.469       5019045.5
3                379093.812       5019050.5
4                378943.125       5019081.5
5                378990.5         5019001
6                378995.844       5018992
7                379000.875       5018987
8                379010.75        5018982.5
9                379091.188       5018978.5
10               379099.25        5018970
12               378890.781       5019050.5
13               379022.781       5019128.5
14               379038.656       5019142.5
15               378980.062       5018995
J1               378895.99        5019053.594
J2               379034.931       5019139.225
11               379098.531       5018955
```

```
[VERTICES]
;Link            X-Coord          Y-Coord
;--------------- ---------------- ----------------
```

Appendix B Stormwater Servicing and Management

B.1 Storm Sewer Design Sheet

Stantec

301 Somme	
DATE:	2026-09-09
REVISION:	1
DESIGNED BY:	MJS
CHECKED BY:	DT

STORM SEWER DESIGN SHEET
(City of Ottawa)

FILE NUMBER: 160402138

DESIGN PARAMETERS

$I = a / (t+b)^c$ (As per City of Ottawa Guidelines, 2012)

	1:2 yr	1:5 yr	1:10 yr	1:100 yr			
a =	732.951	998.071	1174.184	1735.688	MANNING'S n =	0.013	BEDDING CLASS = B
b =	6.199	6.053	6.014	6.014	MINIMUM COVER:	2.00 m	
c =	0.810	0.814	0.816	0.820	TIME OF ENTRY	10 min	

LOCATION			DRAINAGE AREA																									PIPE SELECTION											
AREA ID NUMBER	FROM M.H.	TO M.H.	AREA (2-YEAR) (ha)	AREA (5-YEAR) (ha)	AREA (10-YEAR) (ha)	AREA (100-YEAR) (ha)	AREA (ROOF) (ha)	C (2-YEAR) (-)	C (5-YEAR) (-)	C (10-YEAR) (-)	C (100-YEAR) (-)	A x C (2-YEAR) (ha)	ACCUM AxC (2YR) (ha)	A x C (5-YEAR) (ha)	ACCUM. AxC (5YR) (ha)	A x C (10-YEAR) (ha)	ACCUM. AxC (10YR) (ha)	A x C (100-YEAR) (ha)	ACCUM. AxC (100YR) (ha)	T of C (min)	$I_{2\text{-YEAR}}$ (mm/h)	$I_{5\text{-YEAR}}$ (mm/h)	$I_{10\text{-YEAR}}$ (mm/h)	$I_{100\text{-YEAR}}$ (mm/h)	$Q_{CONTROL}$ (L/s)	ACCUM. $Q_{CONTROL}$ (L/s)	Q_{ACT} (CIA/360) (L/s)	LENGTH (m)	PIPE WIDTH OR DIAMETEI (mm)	PIPE HEIGHT (mm)	PIPE SHAPE (-)	MATERIAL (-)	CLASS (-)	SLOPE %	Q_{CAP} (FULL) (L/s)	% FULL (-)	VEL. (FULL) (m/s)	VEL. (ACT) (m/s)	TIME OF FLOW (min)
L108A	108A	108	0.62	0.00	0.00	0.00	0.00	0.74	0.00	0.00	0.00	0.458	0.458	0.000	0.000	0.000	0.000	0.000	0.000	10.00	76.81	104.19	122.14	178.56	0.0	0.0	97.6	24.0	375	375	CIRCULAR	PVC	-	0.50	116.6	**83.76%**	1.11	1.10	0.36
																				10.36																			
L108B	108B	108	0.48	0.00	0.00	0.00	0.00	0.67	0.00	0.00	0.00	0.318	0.318	0.000	0.000	0.000	0.000	0.000	0.000	10.00	76.81	104.19	122.14	178.56	0.0	0.0	67.9	24.3	375	375	CIRCULAR	PVC	-	0.40	104.3	**65.18%**	0.99	0.92	0.44
																				10.44																			
	108	107	0.00	0.00	0.00	0.00	0.00	0.00	0.00	0.00	0.00	0.000	0.776	0.000	0.000	0.000	0.000	0.000	0.000	10.44	75.15	101.92	119.46	174.62	0.0	0.0	162.0	65.2	525	525	CIRCULAR	CONCRETE	-	0.20	200.6	**80.75%**	0.90	0.88	1.23
L107A	107	106	0.57	0.00	0.00	0.00	0.00	0.72	0.00	0.00	0.00	0.408	1.184	0.000	0.000	0.000	0.000	0.000	0.000	11.67	70.93	96.13	112.64	164.60	0.0	0.0	233.3	43.6	600	600	CIRCULAR	CONCRETE	-	0.20	286.5	**81.45%**	0.98	0.97	0.75
	106	105	0.00	0.00	0.00	0.00	0.00	0.00	0.00	0.00	0.00	0.000	1.184	0.000	0.000	0.000	0.000	0.000	0.000	12.42	68.62	92.95	108.90	159.11	0.0	0.0	225.7	82.9	600	600	CIRCULAR	CONCRETE	-	0.20	286.5	**78.80%**	0.98	0.96	1.44
L105A	105	101	1.02	0.00	0.00	0.00	0.00	0.86	0.00	0.00	0.00	0.875	2.059	0.000	0.000	0.000	0.000	0.000	0.000	13.85	64.61	87.45	102.43	149.62	0.0	0.0	369.6	115.4	750	750	CIRCULAR	CONCRETE	-	0.15	449.8	**82.16%**	0.99	0.98	1.97
																				15.82																			
L111A	111	110	0.46	0.00	0.00	0.00	0.00	0.86	0.00	0.00	0.00	0.395	0.395	0.000	0.000	0.000	0.000	0.000	0.000	10.00	76.81	104.19	122.14	178.56	0.0	0.0	84.4	37.9	450	450	CIRCULAR	CONCRETE	-	0.25	148.7	**56.73%**	0.91	0.80	0.79
L110A	110	109	0.22	0.00	0.00	0.00	0.00	0.90	0.00	0.00	0.00	0.194	0.589	0.000	0.000	0.000	0.000	0.000	0.000	10.79	73.91	100.22	117.46	171.68	0.0	0.0	121.0	38.6	450	450	CIRCULAR	CONCRETE	-	0.25	148.7	**81.36%**	0.91	0.90	0.72
	109	101	0.00	0.00	0.00	0.00	0.00	0.00	0.00	0.00	0.00	0.000	0.589	0.000	0.000	0.000	0.000	0.000	0.000	11.50	71.48	96.87	113.52	165.89	0.0	0.0	117.0	64.9	450	450	CIRCULAR	CONCRETE	-	0.25	148.7	**78.68%**	0.91	0.89	1.22
																				12.72																			
L101A	101	100	0.37	0.00	0.00	0.00	0.00	0.87	0.00	0.00	0.00	0.320	2.969	0.000	0.000	0.000	0.000	0.000	0.000	15.82	59.89	80.99	94.83	138.47	0.0	0.0	493.9	5.7	825	825	CIRCULAR	CONCRETE	-	0.20	669.7	**73.74%**	1.21	1.17	0.08
																				15.90																			
	103A	103	0.00	0.00	0.00	0.00	0.00	0.00	0.00	0.00	0.00	0.000	0.000	0.000	0.000	0.000	0.000	0.000	0.000	10.00	76.81	104.19	122.14	178.56	0.0	0.0	0.0	49.5	375	375	CIRCULAR	PVC	-	0.40	104.3	**0.00%**	0.99	0.00	0.00
																				10.00																			
L112A	112	104	0.29	0.00	0.00	0.00	0.00	0.74	0.00	0.00	0.00	0.213	0.213	0.000	0.000	0.000	0.000	0.000	0.000	10.00	76.81	104.19	122.14	178.56	0.0	0.0	45.5	41.9	375	375	CIRCULAR	PVC	-	0.30	90.3	**50.43%**	0.86	0.73	0.95
L104A	104	103	0.21	0.00	0.00	0.00	0.00	0.63	0.00	0.00	0.00	0.135	0.349	0.000	0.000	0.000	0.000	0.000	0.000	10.95	73.33	99.41	116.51	170.29	0.0	0.0	71.0	38.5	375	375	CIRCULAR	PVC	-	0.30	90.3	**78.68%**	0.86	0.84	0.76
																				11.72																			
L103A	103	102	0.30	0.00	0.00	0.00	0.00	0.86	0.00	0.00	0.00	0.261	0.610	0.000	0.000	0.000	0.000	0.000	0.000	11.72	70.78	95.92	112.39	164.24	0.0	0.0	120.0	12.6	525	525	CIRCULAR	CONCRETE	-	0.20	200.6	**59.79%**	0.90	0.81	0.26
L102A	102	100	0.15	0.00	0.00	0.00	0.00	0.90	0.00	0.00	0.00	0.139	0.749	0.000	0.000	0.000	0.000	0.000	0.000	11.98	69.96	94.79	111.07	162.30	0.0	0.0	145.6	32.0	600	600	CIRCULAR	CONCRETE	-	0.15	248.1	**58.67%**	0.85	0.76	0.70
																				12.68																			
L100A	100	Γ HEADW/	0.20	0.00	0.00	0.00	0.00	0.52	0.00	0.00	0.00	0.105	3.822	0.000	0.000	0.000	0.000	0.000	0.000	15.90	59.71	80.74	94.54	138.04	0.0	0.0	634.0	13.6	1050	1050	CIRCULAR	CONCRETE	-	0.15	1103.3	**57.46%**	1.23	1.10	0.21
																				16.11									1050	1050									

B.2 PCSWMM Model Input File (100-Year, 12-Hour SCS Storm)

```
[TITLE]
;;Project Title/Notes

[OPTIONS]
;;Option             Value
FLOW_UNITS           LPS
INFILTRATION         HORTON
FLOW_ROUTING         DYNWAVE
LINK_OFFSETS         ELEVATION
MIN_SLOPE            0
ALLOW_PONDING        YES
SKIP_STEADY_STATE    NO

START_DATE           07/11/2025
START_TIME           00:00:00
REPORT_START_DATE    07/11/2025
REPORT_START_TIME    00:00:00
END_DATE             07/12/2025
END_TIME             00:00:00
SWEEP_START          01/01
SWEEP_END            12/31
DRY_DAYS             0
REPORT_STEP          00:01:00
WET_STEP             00:01:00
DRY_STEP             00:01:00
ROUTING_STEP         1
RULE_STEP            00:00:00

INERTIAL_DAMPING     PARTIAL
NORMAL_FLOW_LIMITED  BOTH
FORCE_MAIN_EQUATION  H-W
VARIABLE_STEP        0
LENGTHENING_STEP     0
MIN_SURFAREA         0
MAX_TRIALS           8
HEAD_TOLERANCE       0.0015
SYS_FLOW_TOL         5
LAT_FLOW_TOL         5
MINIMUM_STEP         0.5
```

```
THREADS              8

[EVAPORATION]
;;Data Source    Parameters
;;-------------- ----------------
CONSTANT         0.0
DRY_ONLY         NO

[RAINGAGES]
;;Name           Format    Interval SCF      Source
;;-------------- --------- -------- -------- ----------
RG1              INTENSITY 0:15     1.0      TIMESERIES 100S12

[SUBCATCHMENTS]
;;Name           Rain Gage        Outlet           Area     %Imperv  Width    %Slope   CurbLen  SnowPack

;;-------------- ---------------- ---------------- -------- -------- -------- -------- --------
----------------
;0.90
BLDG             RG1              102              0.182749 100      41.119   2        0

;0.52
L100A            RG1              100              0.230191 45.71    51.793   2.5      0

;0.87
L101A            RG1              105              0.365744 95.714   82.292   1.5      0

;0.90
L102A            RG1              103              0.157645 100      35.47    1.5      0

;0.86
L103A            RG1              103A             0.303883 94.286   68.374   1.5      0

;0.63
L104A            RG1              104              0.15688  61.43    35.298   1.3      0

;0.86
L105A            RG1              105              1.019332 94.286   229.35   1.2      0
```

```
;0.72
L107A            RG1              107              0.566783 74.286   127.527  1        0

;0.74
L108A            RG1              108A             0.618411 77.143   139.145  1.5      0

;0.67
L108B            RG1              108B             0.475361 67.143   106.956  1.3      0

;0.90
L110A            RG1              110              0.215451 100      48.476   3        0

;0.86
L111A            RG1              111              0.459814 94.286   103.458  2        0

;0.74
L112A            RG1              112              0.28538  77.14    64.211   1.5      0

;0.62
POND             RG1              POND-S           0.284814 60       135      33       0

SOMME1           RG1              C1-I             0.24     100      261      3        0

SOMME2           RG1              CULV-DS          0.03     100      20       3        0

;0.20
UNC-1            RG1              RIDEAU           0.413886 0        315      3        0

;0.25
UNC-2            RG1              C2-I             0.353003 7.14     365      2        0


[SUBAREAS]
;;Subcatchment   N-Imperv   N-Perv     S-Imperv   S-Perv     PctZero    RouteTo    PctRouted
;;-------------- ---------- ---------- ---------- ---------- ---------- ---------- ----------
BLDG             0.013      0.25       1.57       4.67       0          OUTLET
L100A            0.013      0.25       1.57       4.67       0          OUTLET
L101A            0.013      0.25       1.57       4.67       0          OUTLET
L102A            0.013      0.25       1.57       4.67       0          OUTLET
```

```
L103A            0.013      0.25       1.57       4.67       0          OUTLET
L104A            0.013      0.25       1.57       4.67       0          OUTLET
L105A            0.013      0.25       1.57       4.67       0          OUTLET
L107A            0.013      0.25       1.57       4.67       0          OUTLET
L108A            0.013      0.25       1.57       4.67       0          OUTLET
L108B            0.013      0.25       1.57       4.67       0          OUTLET
L110A            0.013      0.25       1.57       4.67       0          OUTLET
L111A            0.013      0.25       1.57       4.67       0          OUTLET
L112A            0.013      0.25       1.57       4.67       0          OUTLET
POND             0.013      0.25       1.57       4.67       0          OUTLET
SOMME1           0.013      0.25       1.57       4.67       0          OUTLET
SOMME2           0.013      0.25       1.57       4.67       0          OUTLET
UNC-1            0.013      0.25       1.57       4.67       0          OUTLET
UNC-2            0.013      0.25       1.57       4.67       0          PERVIOUS   100

[INFILTRATION]
;;Subcatchment   Param1     Param2     Param3     Param4     Param5
;;-------------- ---------- ---------- ---------- ---------- ----------
BLDG             76.2       13.2       4.14       7          0
L100A            76.2       13.2       4.14       7          0
L101A            76.2       13.2       4.14       7          0
L102A            76.2       13.2       4.14       7          0
L103A            76.2       13.2       4.14       7          0
L104A            76.2       13.2       4.14       7          0
L105A            76.2       13.2       4.14       7          0
L107A            76.2       13.2       4.14       7          0
L108A            76.2       13.2       4.14       7          0
L108B            76.2       13.2       4.14       7          0
L110A            76.2       13.2       4.14       7          0
L111A            76.2       13.2       4.14       7          0
L112A            76.2       13.2       4.14       7          0
POND             76.2       13.2       4.14       7          0
SOMME1           76.2       13.2       4.14       7          0
SOMME2           76.2       13.2       4.14       7          0
UNC-1            76.2       13.2       4.14       7          0
UNC-2            76.2       13.2       4.14       7          0

[OUTFALLS]
;;Name           Elevation  Type       Stage Data       Gated    Route To
```

```
;;-------------- ---------- ---------- ---------------- -------- ----------------
RIDEAU           0          FREE                        NO
SOMME            88.31      FREE                        NO

[STORAGE]
;;Name           Elev.    MaxDepth   InitDepth  Shape       Curve Name/Params            SurDepth Fevap
Psi      Ksat     IMD
;;-------------- -------- ---------- ---------- ----------- ---------------------------- -------- --------
-------- -------- --------
;2400mm
100              88.92    2.07       0.38       FUNCTIONAL  0         0         1.13     0        0
;3000mm
101              89.156   1.934      0.144      FUNCTIONAL  0         0         1.13     0        0
;1500mm
102              89.418   2.192      0          FUNCTIONAL  0         0         1.13     0        0
;1500mm
103              89.534   2.446      0          TABULAR     103V                         0        0
;CB
103A             89.882   1.988      0          TABULAR     103AV                        0        0
;1200mm
104              89.799   2.151      0          TABULAR     104V                         0        0
;1800mm
105              89.404   1.676      0          TABULAR     105V                         0        0
;1800mm
106              89.708   1.932      0          FUNCTIONAL  0         0         1.13     0        0
;1500mm
107              89.74    1.96       0          TABULAR     107V                         0        0
;1500mm
108              90.015   1.615      0          FUNCTIONAL  0         0         1.13     0        0
;CB
108A             90.285   1.515      0          TABULAR     108AV                        0        0
;CB
108B             90.262   1.538      0          TABULAR     108BV                        0        0
;1200mm
109              89.693   1.767      0          FUNCTIONAL  0         0         1.13     0        0
;1200mm
110              89.85    1.95       0          TABULAR     110V                         0        0
;CB
111              89.975   1.865      0          TABULAR     111V                         0        0
```

```
;CB
112              89.955   1.915      0          TABULAR     112V                         0        0
C1-I             88.81    1.2        0          FUNCTIONAL  0         0         0        0        0
C1-O             88.66    1.2        0          FUNCTIONAL  0         0         0        0        0
C2-I             89.65    1.2        0          FUNCTIONAL  0         0         0        0        0
C2-O             89.46    1.2        0          FUNCTIONAL  0         0         0        0        0
CULV-DS          89.82    1.2        0          FUNCTIONAL  0         0         0        0        0
CULV-US          89.97    1.3        0          FUNCTIONAL  0         0         0        0        0
POND-S           87.6     3.2        1.7        TABULAR     POND-V                       0        0

[CONDUITS]
;;Name           From Node        To Node          Length     Roughness  InOffset   OutOffset  InitFlow
MaxFlow
;;-------------- ---------------- ---------------- ---------- ---------- ---------- ---------- ----------
----------
;1050mm
100--POND-S      100              POND-S           13.61      0.013      88.92      88.9       0          0

;1050mm
101--100         101              100              5.746      0.013      89.156     89.145     0          0

;525mm
102--101         102              100              32         0.013      89.418     89.37      0          0

;525mm
103--102         103              102              12.574     0.013      89.534     89.509     0          0

;375mm
103A--103        103A             103              49.469     0.013      89.882     89.684     0          0

;375mm
104--103         104              103              38.488     0.013      89.799     89.684     0          0

;750mm
105--101         105              101              115.406    0.013      89.404     89.231     0          0

;600mm
106--105         106              105              82.887     0.013      89.708     89.542     0          0
```

```
;525mm
108--107         108              107              65.244     0.013      90.015     89.885     0          0

;375mm
108A--108        108A             108              24.002     0.013      90.285     90.165     0          0

;375mm
108B--108        108B             108              24.344     0.013      90.262     90.165     0          0

;450mm
109--101         109              101              64.915     0.013      89.693     89.531     0          0

;450mm
110--109         110              109              38.618     0.013      89.85      89.753     0          0

;450mm
111--110         111              110              37.879     0.013      89.975     89.88      0          0

;375mm
112--104         112              104              49.468     0.013      89.955     89.829     0          0

C1               C1-I             C1-O             23.062     0.024      88.81      88.66      0          0

C2               C2-I             C2-O             29.756     0.024      89.65      89.46      0          0

C3               CULV-DS          C2-I             31.7       0.025      89.87      89.73      0          0

C4               CULV-US          CULV-DS          20.84      0.024      89.97      89.82      0          0

D1               C1-O             SOMME            70.95      0.025      88.76      88.31      0          0

D2               C2-O             C1-I             92.8       0.025      89.54      88.91      0          0


[ORIFICES]
;;Name           From Node        To Node          Type         Offset     Qcoeff     Gated    CloseTime
;;-------------- ---------------- ---------------- ------------ ---------- ---------- -------- ----------
;600mm
107--106         107              106              SIDE         89.74      0.61       NO       0
```

```
OR1              POND-S           C1-I             SIDE         89.3       0.61       NO       0

[WEIRS]
;;Name           From Node        To Node          Type         CrestHt    Qcoeff     Gated    EndCon
EndCoeff   Surcharge  RoadWidth  RoadSurf   Coeff. Curve
;;-------------- ---------------- ---------------- ------------ ---------- ---------- -------- --------
---------- ---------- ---------- ---------- ----------------
OR2              POND-S           C1-I             TRANSVERSE   89.9       1.67       NO       0        0
       YES
W1               105              C1-O             TRANSVERSE   90.88      1.67       NO       0        0
       YES

[XSECTIONS]
;;Link           Shape        Geom1            Geom2      Geom3      Geom4      Barrels    Culvert
;;-------------- ------------ ---------------- ---------- ---------- ---------- ---------- ----------
100--POND-S      CIRCULAR     1.05             0          0          0          1
101--100         CIRCULAR     1.05             0          0          0          1
102--101         CIRCULAR     0.6              0          0          0          1
103--102         CIRCULAR     0.525            0          0          0          1
103A--103        CIRCULAR     0.375            0          0          0          1
104--103         CIRCULAR     0.375            0          0          0          1
105--101         CIRCULAR     0.75             0          0          0          1
106--105         CIRCULAR     0.6              0          0          0          1
108--107         CIRCULAR     0.525            0          0          0          1
108A--108        CIRCULAR     0.375            0          0          0          1
108B--108        CIRCULAR     0.375            0          0          0          1
109--101         CIRCULAR     0.45             0          0          0          1
110--109         CIRCULAR     0.45             0          0          0          1
111--110         CIRCULAR     0.45             0          0          0          1
112--104         CIRCULAR     0.375            0          0          0          1
C1               ARCH         0.97             1.39       0          0          2
C2               ARCH         0.82             1.15       0          0          2
C3               TRIANGULAR   1.2              7.2        0          0          1
C4               ARCH         0.82             1.15       0          0          2
D1               TRIANGULAR   1.2              7.2        0          0          1
D2               TRIANGULAR   1.2              7.2        0          0          1
107--106         CIRCULAR     0.375            0          0          0
OR1              CIRCULAR     0.102            0          0          0
OR2              RECT_OPEN    0.7              1.65       0          0
```

```
W1               RECT_OPEN    0.2              6          0          0

[LOSSES]
;;Link           Kentry     Kexit      Kavg       Flap Gate  Seepage
;;-------------- ---------- ---------- ---------- ---------- ----------
100--POND-S      0          0.9        0          NO         0
101--100         0          1.344      0          NO         0
102--101         0          1.344      0          NO         0
103--102         0          0.444      0          NO         0
103A--103        0          0.444      0          NO         0
104--103         0          0.229      0          NO         0
105--101         0          0.259      0          NO         0
106--105         0          1.344      0          NO         0
108--107         0          1.26       0          NO         0
108A--108        0          1.344      0          NO         0
108B--108        0          1.344      0          NO         0
109--101         0          0.053      0          NO         0
110--109         0          1.141      0          NO         0
111--110         0          1.344      0          NO         0
112--104         0          1.061      0          NO         0
C1               0.9        0          0          NO         0
C2               0.9        0          0          NO         0
C4               0.9        0          0          NO         0

[INFLOWS]
;;Node           Constituent      Time Series      Type     Mfactor  Sfactor  Baseline Pattern
;;-------------- ---------------- ---------------- -------- -------- -------- -------- --------
CULV-US          FLOW             ""               FLOW     1.0      1        2581.8

[CURVES]
;;Name           Type       X-Value    Y-Value
;;-------------- ---------- ---------- ----------
103AV            Storage    0          1.13
103AV                       1.488      1.13
103AV                       1.48801    0
103AV                       1.788      1037.3
103AV                       1.988      1037.3

103V             Storage    0          1.13
```

```
103V                        1.946      1.13
103V                        1.94601    0
103V                        2.096      312.8
103V                        2.446      312.8

104V             Storage    0          1.13
104V                        1.651      1.13
104V                        1.65101    0
104V                        1.951      418.7
104V                        2.151      418.7

105V             Storage    0          1.13
105V                        1.196      1.13
105V                        1.19601    0
105V                        1.476      564.8
105V                        1.676      564.8

107V             Storage    0          1.13
107V                        1.46       1.13
107V                        1.4601     0
107V                        1.76       1119.9
107V                        1.96       1119.9

108AV            Storage    0          0.36
108AV                       1.015      0.36
108AV                       1.01501    0
108AV                       1.315      1084.6
108AV                       1.515      1084.6

108BV            Storage    0          0.36
108BV                       1.038      0.36
108BV                       1.03801    0
108BV                       1.338      1232.5
108BV                       1.538      1232.5

110V             Storage    0          1.13
110V                        1.45       1.13
110V                        1.45001    0
110V                        1.75       368.3
```

```
110V                        1.95       368.3

111V             Storage    0          0.36
111V                        1.365      0.36
111V                        1.36501    0
111V                        1.665      658.5
111V                        1.865      658.5

112V             Storage    0          1.13
112V                        1.415      1.13
112V                        1.41501    0
112V                        1.715      777.1
112V                        1.915      777.1

POND-V           Storage    0          163
POND-V                      0.1        230
POND-V                      0.2        296
POND-V                      0.3        363
POND-V                      0.4        430
POND-V                      0.5        497
POND-V                      0.6        563
POND-V                      0.7        630
POND-V                      0.8        697
POND-V                      0.9        763
POND-V                      1          830
POND-V                      1.1        897
POND-V                      1.2        963
POND-V                      1.3        1030
POND-V                      1.4        1097
POND-V                      1.5        1164
POND-V                      1.6        1230
POND-V                      1.7        1297
POND-V                      1.8        1331
POND-V                      1.9        1433
POND-V                      2          1549
POND-V                      2.1        1676
POND-V                      2.2        1817
POND-V                      2.3        1970
POND-V                      2.4        2136
```

```
POND-V                      2.5        2315
POND-V                      2.6        2506
POND-V                      2.7        2710
POND-V                      2.8        2926
POND-V                      2.9        3156
POND-V                      3          3395
POND-V                      3.1        3642
POND-V                      3.2        3897

[TIMESERIES]
;;Name           Date       Time       Value
;;-------------- ---------- ---------- ----------
002C03                      0:00       0
002C03                      0:10       2.81
002C03                      0:20       3.5
002C03                      0:30       4.69
002C03                      0:40       7.3
002C03                      0:50       18.21
002C03                      1:00       76.81
002C03                      1:10       24.08
002C03                      1:20       12.36
002C03                      1:30       8.32
002C03                      1:40       6.3
002C03                      1:50       5.09
002C03                      2:00       4.29
002C03                      2:10       3.72
002C03                      2:20       3.29
002C03                      2:30       2.95
002C03                      2:40       2.68
002C03                      2:50       2.46
002C03                      3:00       2.28

002S12                      0:00       1.06
002S12                      0:15       1.06
002S12                      0:30       1.06
002S12                      0:45       1.06
002S12                      1:00       1.06
002S12                      1:15       1.06
002S12                      1:30       1.06
```

002S12	1:45	1.06
002S12	2:00	1.27
002S12	2:15	1.27
002S12	2:30	1.27
002S12	2:45	1.27
002S12	3:00	1.69
002S12	3:15	1.69
002S12	3:30	1.69
002S12	3:45	1.69
002S12	4:00	2.54
002S12	4:15	2.54
002S12	4:30	3.39
002S12	4:45	3.39
002S12	5:00	5.08
002S12	5:15	5.08
002S12	5:30	20.33
002S12	5:45	55.90
002S12	6:00	7.62
002S12	6:15	7.62
002S12	6:30	3.39
002S12	6:45	3.39
002S12	7:00	2.54
002S12	7:15	2.54
002S12	7:30	2.54
002S12	7:45	2.54
002S12	8:00	1.48
002S12	8:15	1.48
002S12	8:30	1.48
002S12	8:45	1.48
002S12	9:00	1.48
002S12	9:15	1.48
002S12	9:30	1.48
002S12	9:45	1.48
002S12	10:00	0.85
002S12	10:15	0.85
002S12	10:30	0.85
002S12	10:45	0.85
002S12	11:00	0.85
002S12	11:15	0.85
002S12	11:30	0.85
002S12	11:45	0.85
002S12	12:00	0
005C03	0:00	0
005C03	0:10	3.68
005C03	0:20	4.58
005C03	0:30	6.15
005C03	0:40	9.61
005C03	0:50	24.17
005C03	1:00	104.19
005C03	1:10	32.04
005C03	1:20	16.34
005C03	1:30	10.96
005C03	1:40	8.29
005C03	1:50	6.69
005C03	2:00	5.63
005C03	2:10	4.87
005C03	2:20	4.3
005C03	2:30	3.86
005C03	2:40	3.51
005C03	2:50	3.22
005C03	3:00	2.98
005S12	0:00	1.40
005S12	0:15	1.40
005S12	0:30	1.40
005S12	0:45	1.40
005S12	1:00	1.40
005S12	1:15	1.40
005S12	1:30	1.40
005S12	1:45	1.40
005S12	2:00	1.69
005S12	2:15	1.69
005S12	2:30	1.69
005S12	2:45	1.69
005S12	3:00	2.25
005S12	3:15	2.25
005S12	3:30	2.25

005S12	3:45	2.25
005S12	4:00	3.37
005S12	4:15	3.37
005S12	4:30	4.49
005S12	4:45	4.49
005S12	5:00	6.74
005S12	5:15	6.74
005S12	5:30	26.96
005S12	5:45	74.15
005S12	6:00	10.11
005S12	6:15	10.11
005S12	6:30	4.49
005S12	6:45	4.49
005S12	7:00	3.37
005S12	7:15	3.37
005S12	7:30	3.37
005S12	7:45	3.37
005S12	8:00	1.97
005S12	8:15	1.97
005S12	8:30	1.97
005S12	8:45	1.97
005S12	9:00	1.97
005S12	9:15	1.97
005S12	9:30	1.97
005S12	9:45	1.97
005S12	10:00	1.12
005S12	10:15	1.12
005S12	10:30	1.12
005S12	10:45	1.12
005S12	11:00	1.12
005S12	11:15	1.12
005S12	11:30	1.12
005S12	11:45	1.12
005S12	12:00	0
010S12	0:00	1.63
010S12	0:15	1.63
010S12	0:30	1.63
010S12	0:45	1.63

010S12	1:00	1.63
010S12	1:15	1.63
010S12	1:30	1.63
010S12	1:45	1.63
010S12	2:00	1.96
010S12	2:15	1.96
010S12	2:30	1.96
010S12	2:45	1.96
010S12	3:00	2.61
010S12	3:15	2.61
010S12	3:30	2.61
010S12	3:45	2.61
010S12	4:00	3.91
010S12	4:15	3.91
010S12	4:30	5.22
010S12	4:45	5.22
010S12	5:00	7.83
010S12	5:15	7.83
010S12	5:30	31.31
010S12	5:45	86.09
010S12	6:00	11.74
010S12	6:15	11.74
010S12	6:30	5.22
010S12	6:45	5.22
010S12	7:00	3.91
010S12	7:15	3.91
010S12	7:30	3.91
010S12	7:45	3.91
010S12	8:00	2.28
010S12	8:15	2.28
010S12	8:30	2.28
010S12	8:45	2.28
010S12	9:00	2.28
010S12	9:15	2.28
010S12	9:30	2.28
010S12	9:45	2.28
010S12	10:00	1.30
010S12	10:15	1.30
010S12	10:30	1.30

010S12	10:45	1.30
010S12	11:00	1.30
010S12	11:15	1.30
010S12	11:30	1.30
010S12	11:45	1.30
010S12	12:00	0
025M04	0:10	1.516088055
025M04	0:20	1.749115351
025M04	0:30	2.078715445
025M04	0:40	2.583625152
025M04	0:50	3.461716789
025M04	1:00	5.394996968
025M04	1:10	13.44811663
025M04	1:20	56.72433275
025M04	1:30	17.78358976
025M04	1:40	9.131254948
025M04	1:50	6.147712357
025M04	2:00	4.655383456
025M04	2:10	3.762897479
025M04	2:20	3.169361772
025M04	2:30	2.745825503
025M04	2:40	2.428071751
025M04	2:50	2.180598417
025M04	3:00	1.982179574
025M04	3:10	1.819403154
025M04	3:20	1.683310546
025M04	3:30	1.567742242
025M04	3:40	1.468311255
025M04	3:50	1.381797508
025M04	4:00	1.305793328
025S12	0:00	1.91
025S12	0:15	1.91
025S12	0:30	1.91
025S12	0:45	1.91
025S12	1:00	1.91
025S12	1:15	1.91
025S12	1:30	1.91

025S12	1:45	1.91
025S12	2:00	2.29
025S12	2:15	2.29
025S12	2:30	2.29
025S12	2:45	2.29
025S12	3:00	3.06
025S12	3:15	3.06
025S12	3:30	3.06
025S12	3:45	3.06
025S12	4:00	4.58
025S12	4:15	4.58
025S12	4:30	6.11
025S12	4:45	6.11
025S12	5:00	9.17
025S12	5:15	9.17
025S12	5:30	36.67
025S12	5:45	100.85
025S12	6:00	13.75
025S12	6:15	13.75
025S12	6:30	6.11
025S12	6:45	6.11
025S12	7:00	4.58
025S12	7:15	4.58
025S12	7:30	4.58
025S12	7:45	4.58
025S12	8:00	2.67
025S12	8:15	2.67
025S12	8:30	2.67
025S12	8:45	2.67
025S12	9:00	2.67
025S12	9:15	2.67
025S12	9:30	2.67
025S12	9:45	2.67
025S12	10:00	1.53
025S12	10:15	1.53
025S12	10:30	1.53
025S12	10:45	1.53
025S12	11:00	1.53
025S12	11:15	1.53

025S12	11:30	1.53
025S12	11:45	1.53
025S12	12:00	0
100C03	0:00	0
100C03	0:10	6.05
100C03	0:20	7.54
100C03	0:30	10.16
100C03	0:40	15.97
100C03	0:50	40.65
100C03	1:00	178.56
100C03	1:10	54.05
100C03	1:20	27.32
100C03	1:30	18.24
100C03	1:40	13.74
100C03	1:50	11.06
100C03	2:00	9.29
100C03	2:10	8.02
100C03	2:20	7.08
100C03	2:30	6.35
100C03	2:40	5.76
100C03	2:50	5.28
100C03	3:00	4.88
100S12	0:00	2.35
100S12	0:15	2.35
100S12	0:30	2.35
100S12	0:45	2.35
100S12	1:00	2.35
100S12	1:15	2.35
100S12	1:30	2.35
100S12	1:45	2.35
100S12	2:00	2.82
100S12	2:15	2.82
100S12	2:30	2.82
100S12	2:45	2.82
100S12	3:00	3.76
100S12	3:15	3.76
100S12	3:30	3.76

100S12	3:45	3.76
100S12	4:00	5.63
100S12	4:15	5.63
100S12	4:30	7.51
100S12	4:45	7.51
100S12	5:00	11.27
100S12	5:15	11.27
100S12	5:30	45.07
100S12	5:45	123.95
100S12	6:00	16.90
100S12	6:15	16.90
100S12	6:30	7.51
100S12	6:45	7.51
100S12	7:00	5.63
100S12	7:15	5.63
100S12	7:30	5.63
100S12	7:45	5.63
100S12	8:00	3.29
100S12	8:15	3.29
100S12	8:30	3.29
100S12	8:45	3.29
100S12	9:00	3.29
100S12	9:15	3.29
100S12	9:30	3.29
100S12	9:45	3.29
100S12	10:00	1.88
100S12	10:15	1.88
100S12	10:30	1.88
100S12	10:45	1.88
100S12	11:00	1.88
100S12	11:15	1.88
100S12	11:30	1.88
100S12	11:45	1.88
100S12	12:00	0
120C03	0:00	0
120C03	0:10	7.26
120C03	0:20	9.048
120C03	0:30	12.192

```
120C03                      0:40       19.164
120C03                      0:50       48.78
120C03                      1:00       214.272
120C03                      1:10       64.86
120C03                      1:20       32.784
120C03                      1:30       21.888
120C03                      1:40       16.488
120C03                      1:50       13.272
120C03                      2:00       11.148
120C03                      2:10       9.624
120C03                      2:20       8.496
120C03                      2:30       7.62
120C03                      2:40       6.912
120C03                      2:50       6.336
120C03                      3:00       5.856

120S12                      0:00       2.82
120S12                      0:15       2.82
120S12                      0:30       2.82
120S12                      0:45       2.82
120S12                      1:00       2.82
120S12                      1:15       2.82
120S12                      1:30       2.82
120S12                      1:45       2.82
120S12                      2:00       3.38
120S12                      2:15       3.38
120S12                      2:30       3.38
120S12                      2:45       3.38
120S12                      3:00       4.51
120S12                      3:15       4.51
120S12                      3:30       4.51
120S12                      3:45       4.51
120S12                      4:00       6.76
120S12                      4:15       6.76
120S12                      4:30       9.01
120S12                      4:45       9.01
120S12                      5:00       13.52
120S12                      5:15       13.52
120S12                      5:30       54.09
```

```
120S12                      5:45       148.74
120S12                      6:00       20.28
120S12                      6:15       20.28
120S12                      6:30       9.01
120S12                      6:45       9.01
120S12                      7:00       6.76
120S12                      7:15       6.76
120S12                      7:30       6.76
120S12                      7:45       6.76
120S12                      8:00       3.94
120S12                      8:15       3.94
120S12                      8:30       3.94
120S12                      8:45       3.94
120S12                      9:00       3.94
120S12                      9:15       3.94
120S12                      9:30       3.94
120S12                      9:45       3.94
120S12                      10:00      2.25
120S12                      10:15      2.25
120S12                      10:30      2.25
120S12                      10:45      2.25
120S12                      11:00      2.25
120S12                      11:15      2.25
120S12                      11:30      2.25
120S12                      11:45      2.25
120S12                      12:00      0

[REPORT]
;;Reporting Options
INPUT      YES
CONTROLS   NO
SUBCATCHMENTS ALL
NODES ALL
LINKS ALL

[TAGS]
Link       C1               MN
Link       C2               MN
Link       C3               MJ
```

```
Link       D1               MJ
Link       D2               MJ

[MAP]
DIMENSIONS       378841.1709      5018906.87675    379191.5451      5019236.75025
UNITS            Meters

[COORDINATES]
;;Node           X-Coord            Y-Coord
;;-------------- ------------------ ------------------
RIDEAU           378958.48          5019146.773
SOMME            379175.619         5018934.597
100              378985.19          5018977.78
101              378990.12          5018980.73
102              378968.96          5019005.36
103              378966.599         5019017.706
103A             378941.507         5019060.339
104              378930.23          5019005.112
105              379105.385         5018974.96
106              379105.597         5019057.847
107              379141.457         5019082.61
108              379108.372         5019138.843
108A             379087.687         5019126.669
108B             379129.356         5019151.185
109              379043.575         5019017.562
110              379023.996         5019050.848
111              379004.791         5019083.498
112              378908.995         5019041.216
C1-I             379076.977         5018938.95
C1-O             379100.821         5018937.598
C2-I             378958.572         5018946.327
C2-O             378980.22          5018944.16
CULV-DS          378921.407         5018960.863
CULV-US          378909.882         5018943.5
POND-S           379026.881         5018961.68

[VERTICES]
;;Link           X-Coord            Y-Coord
;;-------------- ------------------ ------------------
```

```
OR2              379053.003         5018957.899

[POLYGONS]
;;Subcatchment   X-Coord            Y-Coord
;;-------------- ------------------ ------------------
BLDG             378965.295         5019058.261
BLDG             378978.247         5019065.884
BLDG             378978.247         5019065.884
BLDG             378991.2           5019073.507
BLDG             378991.2           5019073.507
BLDG             379000.547         5019057.625
BLDG             379000.547         5019057.625
BLDG             379018.56          5019027.02
BLDG             379018.56          5019027.02
BLDG             379019.248         5019025.851
BLDG             379019.248         5019025.851
BLDG             379016.74          5019024.372
BLDG             379016.74          5019024.372
BLDG             379019.824         5019019.124
BLDG             379019.824         5019019.124
BLDG             379001.055         5019008.073
BLDG             379001.055         5019008.073
BLDG             378996.433         5019005.355
BLDG             378996.433         5019005.355
BLDG             378992.795         5019011.537
BLDG             378992.795         5019011.537
BLDG             378992.694         5019011.709
BLDG             378992.694         5019011.709
BLDG             378971.836         5019047.148
BLDG             378971.836         5019047.148
BLDG             378965.295         5019058.261
L100A            378925.833         5018980.238
L100A            378953.832         5018996.938
L100A            378953.832         5018996.938
L100A            378952.224         5018999.672
L100A            378952.224         5018999.672
L100A            378952.071         5019000.034
L100A            378964.865         5018996.485
L100A            378965.24          5018996.11
```

L100A	378965.24	5018996.11
L100A	378976.397	5018996.87
L100A	378977.987	5019003.028
L100A	378992.694	5019011.709
L100A	378992.694	5019011.709
L100A	378992.795	5019011.537
L100A	378992.795	5019011.537
L100A	378996.433	5019005.355
L100A	378996.433	5019005.355
L100A	379001.055	5019008.073
L100A	379001.055	5019008.073
L100A	379002.478	5019005.658
L100A	379002.478	5019005.658
L100A	379002.58	5019005.485
L100A	379002.58	5019005.485
L100A	379004.761	5018977.992
L100A	378993.617	5018975.247
L100A	378988.644	5018972.316
L100A	378979.191	5018959.028
L100A	378978.526	5018955.721
L100A	378978.526	5018955.721
L100A	378967.742	5018957.889
L100A	378967.742	5018957.889
L100A	378925.833	5018980.238
L101A	379068.081	5018974.824
L101A	379004.771	5018977.991
L101A	379004.761	5018977.992
L101A	379002.58	5019005.485
L101A	379002.58	5019005.485
L101A	379002.478	5019005.658
L101A	379002.478	5019005.658
L101A	379001.055	5019008.073
L101A	379001.055	5019008.073
L101A	379019.824	5019019.124
L101A	379019.824	5019019.124
L101A	379016.74	5019024.372
L101A	379016.74	5019024.372
L101A	379019.248	5019025.851
L101A	379019.248	5019025.851

L101A	379018.56	5019027.02
L101A	379018.56	5019027.02
L101A	379022.027	5019029.004
L101A	379022.027	5019029.004
L101A	379024.802	5019029.487
L101A	379024.802	5019029.487
L101A	379026.883	5019029.85
L101A	379026.883	5019029.85
L101A	379030.291	5019031.86
L101A	379030.291	5019031.86
L101A	379034.401	5019030.797
L101A	379034.401	5019030.797
L101A	379043.879	5019036.375
L101A	379043.879	5019036.375
L101A	379049.097	5019047.165
L101A	379049.097	5019047.165
L101A	379068.8	5019058.757
L101A	379068.8	5019058.757
L101A	379075.976	5019046.56
L101A	379075.976	5019046.56
L101A	379060.204	5019037.281
L101A	379060.204	5019037.281
L101A	379064.479	5019030.015
L101A	379064.479	5019030.015
L101A	379068.081	5018974.824
L102A	378955.075	5019037.284
L102A	378971.836	5019047.148
L102A	378971.836	5019047.148
L102A	378992.694	5019011.709
L102A	378992.694	5019011.709
L102A	378977.987	5019003.028
L102A	378976.397	5018996.87
L102A	378965.24	5018996.11
L102A	378965.24	5018996.11
L102A	378964.865	5018996.485
L102A	378952.071	5019000.034
L102A	378946.029	5019014.315
L102A	378946.029	5019014.315
L102A	378938.316	5019027.425

L102A	378938.316	5019027.425
L102A	378955.075	5019037.284
L103A	378907.914	5019079.099
L103A	378954.378	5019106.445
L103A	378954.378	5019106.445
L103A	378957.123	5019101.782
L103A	378957.123	5019101.782
L103A	378957.224	5019101.609
L103A	378957.224	5019101.609
L103A	378967.159	5019084.724
L103A	378967.159	5019084.724
L103A	378976.491	5019068.869
L103A	378976.491	5019068.869
L103A	378976.593	5019068.697
L103A	378976.593	5019068.697
L103A	378978.247	5019065.884
L103A	378978.247	5019065.884
L103A	378965.295	5019058.261
L103A	378965.295	5019058.261
L103A	378971.836	5019047.148
L103A	378971.836	5019047.148
L103A	378955.075	5019037.284
L103A	378955.075	5019037.284
L103A	378938.316	5019027.425
L103A	378938.316	5019027.425
L103A	378938.315	5019027.428
L103A	378938.315	5019027.428
L103A	378924.542	5019050.841
L103A	378924.542	5019050.841
L103A	378910.755	5019074.271
L103A	378910.755	5019074.271
L103A	378910.655	5019074.441
L103A	378910.655	5019074.441
L103A	378908.929	5019077.375
L103A	378908.929	5019077.375
L103A	378907.914	5019079.099
L104A	378907.493	5018983.328
L104A	378896.172	5019002.734
L104A	378896.172	5019002.734

L104A	378896.349	5019002.837
L104A	378896.349	5019002.837
L104A	378922.558	5019018.155
L104A	378922.558	5019018.155
L104A	378938.316	5019027.425
L104A	378938.316	5019027.425
L104A	378946.029	5019014.315
L104A	378946.029	5019014.315
L104A	378952.071	5019000.034
L104A	378952.071	5019000.034
L104A	378952.224	5018999.672
L104A	378952.224	5018999.672
L104A	378953.832	5018996.938
L104A	378953.832	5018996.938
L104A	378925.833	5018980.238
L104A	378925.833	5018980.238
L104A	378907.493	5018983.328
L105A	379060.204	5019037.281
L105A	379075.976	5019046.56
L105A	379075.976	5019046.56
L105A	379095.678	5019058.154
L105A	379095.678	5019058.154
L105A	379097.568	5019058.126
L105A	379097.568	5019058.126
L105A	379107.585	5019053.35
L105A	379110.889	5019053.342
L105A	379141.455	5019053.344
L105A	379141.455	5019053.344
L105A	379172.021	5019053.341
L105A	379172.021	5019053.341
L105A	379172.968	5019053.339
L105A	379172.968	5019053.339
L105A	379172.711	5018950.211
L105A	379172.711	5018950.211
L105A	379169.706	5018950.224
L105A	379169.706	5018950.224
L105A	379110.427	5018950.367
L105A	379110.427	5018950.367
L105A	379110.65	5018959.198

L105A	379110.65	5018959.198
L105A	379109.004	5018960.855
L105A	379109.004	5018960.855
L105A	379107.873	5018960.857
L105A	379107.873	5018960.857
L105A	379080.519	5018968.934
L105A	379068.081	5018974.824
L105A	379064.479	5019030.015
L105A	379064.479	5019030.015
L105A	379060.204	5019037.281
L107A	379173.166	5019132.747
L107A	379172.968	5019053.339
L107A	379172.968	5019053.339
L107A	379172.021	5019053.341
L107A	379172.021	5019053.341
L107A	379141.455	5019053.344
L107A	379141.455	5019053.344
L107A	379110.889	5019053.342
L107A	379107.585	5019053.35
L107A	379097.568	5019058.126
L107A	379097.568	5019058.126
L107A	379095.678	5019058.154
L107A	379095.678	5019058.154
L107A	379075.976	5019046.56
L107A	379075.976	5019046.56
L107A	379068.8	5019058.757
L107A	379068.8	5019058.757
L107A	379059.191	5019075.089
L107A	379059.191	5019075.089
L107A	379078.894	5019086.681
L107A	379078.894	5019086.681
L107A	379080.618	5019087.696
L107A	379081.987	5019087.341
L107A	379082.783	5019085.986
L107A	379082.783	5019085.986
L107A	379103.839	5019098.369
L107A	379103.839	5019098.369
L107A	379124.898	5019110.755
L107A	379124.898	5019110.755

L107A	379147.44	5019121.277
L107A	379147.44	5019121.277
L107A	379172.021	5019132.747
L107A	379172.021	5019132.747
L107A	379173.166	5019132.747
L108A	379018.526	5019144.2
L108A	379082.916	5019182.096
L108A	379082.916	5019182.096
L108A	379085.67	5019177.416
L108A	379085.67	5019177.416
L108A	379085.772	5019177.243
L108A	379085.772	5019177.243
L108A	379108.378	5019138.838
L108A	379108.378	5019138.838
L108A	379124.898	5019110.755
L108A	379124.898	5019110.755
L108A	379103.839	5019098.369
L108A	379103.839	5019098.369
L108A	379082.783	5019085.986
L108A	379082.783	5019085.986
L108A	379081.987	5019087.341
L108A	379080.618	5019087.696
L108A	379078.894	5019086.681
L108A	379078.894	5019086.681
L108A	379059.191	5019075.089
L108A	379059.191	5019075.089
L108A	379051.745	5019087.745
L108A	379051.745	5019087.745
L108A	379037.335	5019112.236
L108A	379037.335	5019112.236
L108A	379031.307	5019122.478
L108A	379031.307	5019122.478
L108A	379021.377	5019139.355
L108A	379021.377	5019139.355
L108A	379018.526	5019144.2
L108B	379173.176	5019136.821
L108B	379173.166	5019132.747
L108B	379173.166	5019132.747
L108B	379172.021	5019132.747

L108B	379172.021	5019132.747
L108B	379147.44	5019121.277
L108B	379147.44	5019121.277
L108B	379124.898	5019110.755
L108B	379124.898	5019110.755
L108B	379108.378	5019138.838
L108B	379108.378	5019138.838
L108B	379085.772	5019177.243
L108B	379085.772	5019177.243
L108B	379085.67	5019177.416
L108B	379085.67	5019177.416
L108B	379082.916	5019182.096
L108B	379082.916	5019182.096
L108B	379130.946	5019210.364
L108B	379130.946	5019210.364
L108B	379131.681	5019210.787
L108B	379131.681	5019210.787
L108B	379173.176	5019136.821
L110A	379018.56	5019027.02
L110A	379000.547	5019057.625
L110A	379000.547	5019057.625
L110A	379015.007	5019066.13
L110A	379015.007	5019066.13
L110A	379032.042	5019076.153
L110A	379032.042	5019076.153
L110A	379051.745	5019087.745
L110A	379051.745	5019087.745
L110A	379059.191	5019075.089
L110A	379059.191	5019075.089
L110A	379068.8	5019058.757
L110A	379068.8	5019058.757
L110A	379049.097	5019047.165
L110A	379049.097	5019047.165
L110A	379043.879	5019036.375
L110A	379043.879	5019036.375
L110A	379034.401	5019030.797
L110A	379034.401	5019030.797
L110A	379030.291	5019031.86
L110A	379030.291	5019031.86

L110A	379026.883	5019029.85
L110A	379026.883	5019029.85
L110A	379024.802	5019029.487
L110A	379024.802	5019029.487
L110A	379022.027	5019029.004
L110A	379022.027	5019029.004
L110A	379018.56	5019027.02
L111A	378954.378	5019106.445
L111A	379018.524	5019144.198
L111A	379018.524	5019144.198
L111A	379018.526	5019144.2
L111A	379018.526	5019144.2
L111A	379021.377	5019139.355
L111A	379021.377	5019139.355
L111A	379031.307	5019122.478
L111A	379031.307	5019122.478
L111A	379037.335	5019112.236
L111A	379037.335	5019112.236
L111A	379051.745	5019087.745
L111A	379051.745	5019087.745
L111A	379032.042	5019076.153
L111A	379032.042	5019076.153
L111A	379015.007	5019066.13
L111A	379015.007	5019066.13
L111A	379000.547	5019057.625
L111A	379000.547	5019057.625
L111A	378991.2	5019073.507
L111A	378991.2	5019073.507
L111A	378978.247	5019065.884
L111A	378978.247	5019065.884
L111A	378976.593	5019068.697
L111A	378976.593	5019068.697
L111A	378976.491	5019068.869
L111A	378976.491	5019068.869
L111A	378967.159	5019084.724
L111A	378967.159	5019084.724
L111A	378957.224	5019101.609
L111A	378957.224	5019101.609
L111A	378957.123	5019101.782

L111A	378957.123	5019101.782
L111A	378954.378	5019106.445
L112A	378896.172	5019002.734
L112A	378875.03	5019038.977
L112A	378875.03	5019038.977
L112A	378871.819	5019044.481
L112A	378871.819	5019044.481
L112A	378875.945	5019060.283
L112A	378875.945	5019060.283
L112A	378907.914	5019079.099
L112A	378907.914	5019079.099
L112A	378908.929	5019077.375
L112A	378908.929	5019077.375
L112A	378910.655	5019074.441
L112A	378910.655	5019074.441
L112A	378910.755	5019074.271
L112A	378910.755	5019074.271
L112A	378924.542	5019050.841
L112A	378924.542	5019050.841
L112A	378938.315	5019027.428
L112A	378938.315	5019027.428
L112A	378938.316	5019027.425
L112A	378938.316	5019027.425
L112A	378922.558	5019018.155
L112A	378922.558	5019018.155
L112A	378896.349	5019002.837
L112A	378896.349	5019002.837
L112A	378896.172	5019002.734
POND	378981.258	5018954.623
POND	378978.526	5018955.721
POND	378979.191	5018959.028
POND	378988.644	5018972.316
POND	378993.617	5018975.247
POND	379004.771	5018977.991
POND	379068.081	5018974.824
POND	379080.519	5018968.934
POND	379085.16	5018955.977
POND	379082.788	5018951.745
POND	379072.915	5018945.228

POND	378988.363	5018949.414
POND	378981.258	5018954.623
SOMME1	378970.509	5018947.105
SOMME1	378977.015	5018946.784
SOMME1	379080.664	5018941.67
SOMME1	379172.678	5018937.13
SOMME1	379172.17	5018921.871
SOMME1	379080.873	5018928.565
SOMME1	378976.758	5018934.689
SOMME1	378969.209	5018935.116
SOMME1	378955.679	5018937.965
SOMME1	378917.223	5018954.344
SOMME1	378924.594	5018967.51
SOMME1	378970.509	5018947.105
SOMME2	378899.562	5018967.02
SOMME2	378909.195	5018978.217
SOMME2	378917.012	5018970.88
SOMME2	378924.594	5018967.51
SOMME2	378917.223	5018954.344
SOMME2	378899.562	5018967.02
UNC-1	379125.527	5019221.756
UNC-1	379131.681	5019210.787
UNC-1	379131.681	5019210.787
UNC-1	379130.946	5019210.364
UNC-1	379130.946	5019210.364
UNC-1	379082.916	5019182.096
UNC-1	379082.916	5019182.096
UNC-1	379018.526	5019144.2
UNC-1	379018.526	5019144.2
UNC-1	379018.524	5019144.198
UNC-1	379018.524	5019144.198
UNC-1	378954.378	5019106.445
UNC-1	378954.378	5019106.445
UNC-1	378907.914	5019079.099
UNC-1	378907.914	5019079.099
UNC-1	378875.945	5019060.283
UNC-1	378875.945	5019060.283
UNC-1	378871.819	5019044.481
UNC-1	378871.819	5019044.481

```
UNC-1            378857.097         5019052.948
UNC-1            378857.097         5019052.948
UNC-1            378860.765         5019066.686
UNC-1            378860.765         5019066.686
UNC-1            379125.527         5019221.756
UNC-2            379172.678         5018937.13
UNC-2            379080.664         5018941.67
UNC-2            378977.015         5018946.784
UNC-2            378970.509         5018947.105
UNC-2            378917.012         5018970.88
UNC-2            378888.966         5018997.203
UNC-2            378857.097         5019052.948
UNC-2            378871.819         5019044.481
UNC-2            378875.03          5019038.977
UNC-2            378896.172         5019002.734
UNC-2            378907.493         5018983.328
UNC-2            378925.833         5018980.238
UNC-2            378967.742         5018957.889
UNC-2            378978.526         5018955.721
UNC-2            378981.258         5018954.623
UNC-2            378988.363         5018949.414
UNC-2            379072.915         5018945.228
UNC-2            379082.788         5018951.745
UNC-2            379085.16          5018955.977
UNC-2            379080.519         5018968.934
UNC-2            379107.873         5018960.857
UNC-2            379109.004         5018960.855
UNC-2            379110.65          5018959.198
UNC-2            379110.427         5018950.367
UNC-2            379169.706         5018950.224
UNC-2            379172.711         5018950.211
UNC-2            379172.678         5018937.13

;;Storage Node   X-Coord            Y-Coord
;;-------------- ------------------ ------------------

[SYMBOLS]
;;Gage           X-Coord            Y-Coord
;;-------------- ------------------ ------------------
```

B.3 PCSWMM Model Output File (100-Year, 12-Hour SCS Storm)

EPA STORM WATER MANAGEMENT MODEL - VERSION 5.2 (Build 5.2.4)

****
Element Count
****
Number of rain gages 1
Number of subcatchments ... 18
Number of nodes 25
Number of links 25
Number of pollutants 0
Number of land uses 0

****
Raingage Summary
****

Name	Data Source	Data Type	Recording Interval
RG1	100S12	INTENSITY	15 min.

****
Subcatchment Summary
****

Name	Area	Width	%Imperv	%Slope	Rain Gage	Outlet
BLDG	0.18	41.12	100.00	2.0000	RG1	102
L100A	0.23	51.79	45.71	2.5000	RG1	100
L101A	0.37	82.29	95.71	1.5000	RG1	105
L102A	0.16	35.47	100.00	1.5000	RG1	103
L103A	0.30	68.37	94.29	1.5000	RG1	103A
L104A	0.16	35.30	61.43	1.3000	RG1	104
L105A	1.02	229.35	94.29	1.2000	RG1	105
L107A	0.57	127.53	74.29	1.0000	RG1	107
L108A	0.62	139.15	77.14	1.5000	RG1	108A
L108B	0.48	106.96	67.14	1.3000	RG1	108B
L110A	0.22	48.48	100.00	3.0000	RG1	110
L111A	0.46	103.46	94.29	2.0000	RG1	111
L112A	0.29	64.21	77.14	1.5000	RG1	112
POND	0.28	135.00	60.00	33.0000	RG1	POND-S
SOMME1	0.24	261.00	100.00	3.0000	RG1	C1-I
SOMME2	0.03	20.00	100.00	3.0000	RG1	CULV-DS
UNC-1	0.41	315.00	0.00	3.0000	RG1	RIDEAU
UNC-2	0.35	365.00	7.14	2.0000	RG1	C2-I

****
Node Summary
****

Name	Type	Invert Elev.	Max. Depth	Ponded Area	External Inflow
RIDEAU	OUTFALL	0.00	0.00	0.0	
SOMME	OUTFALL	88.31	1.20	0.0	
100	STORAGE	88.92	2.07	0.0	
101	STORAGE	89.16	1.93	0.0	
102	STORAGE	89.42	2.19	0.0	
103	STORAGE	89.53	2.45	0.0	
103A	STORAGE	89.88	1.99	0.0	
104	STORAGE	89.80	2.15	0.0	
105	STORAGE	89.40	1.68	0.0	
106	STORAGE	89.71	1.93	0.0	
107	STORAGE	89.74	1.96	0.0	
108	STORAGE	90.02	1.61	0.0	
108A	STORAGE	90.28	1.51	0.0	
108B	STORAGE	90.26	1.54	0.0	
109	STORAGE	89.69	1.77	0.0	
110	STORAGE	89.85	1.95	0.0	
111	STORAGE	89.97	1.86	0.0	
112	STORAGE	89.95	1.92	0.0	
C1-I	STORAGE	88.81	1.20	0.0	
C1-O	STORAGE	88.66	1.20	0.0	
C2-I	STORAGE	89.65	1.20	0.0	

C2-O	STORAGE	89.46	1.20	0.0	
CULV-DS	STORAGE	89.82	1.20	0.0	
CULV-US	STORAGE	89.97	1.30	0.0	Yes
POND-S	STORAGE	87.60	3.20	0.0	

****
Link Summary
****

Name	From Node	To Node	Type	Length	%Slope	Roughness
100--POND-S	100	POND-S	CONDUIT	13.6	0.1470	0.0130
101--100	101	100	CONDUIT	5.7	0.1914	0.0130
102--101	102	100	CONDUIT	32.0	0.1500	0.0130
103--102	103	102	CONDUIT	12.6	0.1988	0.0130
103A--103	103A	103	CONDUIT	49.5	0.4003	0.0130
104--103	104	103	CONDUIT	38.5	0.2988	0.0130
105--101	105	101	CONDUIT	115.4	0.1499	0.0130
106--105	106	105	CONDUIT	82.9	0.2003	0.0130
108--107	108	107	CONDUIT	65.2	0.1993	0.0130
108A--108	108A	108	CONDUIT	24.0	0.5000	0.0130
108B--108	108B	108	CONDUIT	24.3	0.3985	0.0130
109--101	109	101	CONDUIT	64.9	0.2496	0.0130
110--109	110	109	CONDUIT	38.6	0.2512	0.0130
111--110	111	110	CONDUIT	37.9	0.2508	0.0130
112--104	112	104	CONDUIT	49.5	0.2547	0.0130
C1	C1-I	C1-O	CONDUIT	23.1	0.6504	0.0240
C2	C2-I	C2-O	CONDUIT	29.8	0.6385	0.0240
C3	CULV-DS	C2-I	CONDUIT	31.7	0.4416	0.0250
C4	CULV-US	CULV-DS	CONDUIT	20.8	0.7198	0.0240
D1	C1-O	SOMME	CONDUIT	71.0	0.6343	0.0250
D2	C2-O	C1-I	CONDUIT	92.8	0.6789	0.0250
107--106	107	106	ORIFICE			
OR1	POND-S	C1-I	ORIFICE			
OR2	POND-S	C1-I	WEIR			
W1	105	C1-O	WEIR			

****

Cross Section Summary
****

Conduit	Shape	Full Depth	Full Area	Hyd. Rad.	Max. Width	No. of Barrels	Full Flow
100--POND-S	CIRCULAR	1.05	0.87	0.26	1.05	1	1046.86
101--100	CIRCULAR	1.05	0.87	0.26	1.05	1	1194.86
102--101	CIRCULAR	0.60	0.28	0.15	0.60	1	237.82
103--102	CIRCULAR	0.53	0.22	0.13	0.53	1	191.77
103A--103	CIRCULAR	0.38	0.11	0.09	0.38	1	110.93
104--103	CIRCULAR	0.38	0.11	0.09	0.38	1	95.85
105--101	CIRCULAR	0.75	0.44	0.19	0.75	1	431.06
106--105	CIRCULAR	0.60	0.28	0.15	0.60	1	274.80
108--107	CIRCULAR	0.53	0.22	0.13	0.53	1	191.98
108A--108	CIRCULAR	0.38	0.11	0.09	0.38	1	123.98
108B--108	CIRCULAR	0.38	0.11	0.09	0.38	1	110.68
109--101	CIRCULAR	0.45	0.16	0.11	0.45	1	142.44
110--109	CIRCULAR	0.45	0.16	0.11	0.45	1	142.90
111--110	CIRCULAR	0.45	0.16	0.11	0.45	1	142.79
112--104	CIRCULAR	0.38	0.11	0.09	0.38	1	88.49
C1	ARCH	0.97	1.06	0.29	1.39	2	1564.59
C2	ARCH	0.82	0.74	0.25	1.15	2	969.35
C3	TRIANGULAR	1.20	4.32	0.57	7.20	1	7887.78
C4	ARCH	0.82	0.74	0.25	1.15	2	1029.17
D1	TRIANGULAR	1.20	4.32	0.57	7.20	1	9452.63
D2	TRIANGULAR	1.20	4.32	0.57	7.20	1	9779.56

****
Analysis Options
****

```
Flow Units ............... LPS
Process Models:
  Rainfall/Runoff ........ YES
  RDII ................... NO
  Snowmelt ............... NO
  Groundwater ............ NO
  Flow Routing ........... YES
  Ponding Allowed ........ YES
```

```
  Water Quality ......... NO
  Infiltration Method ...... HORTON
  Flow Routing Method ...... DYNWAVE
  Surcharge Method ......... EXTRAN
  Starting Date ............ 07/11/2025 00:00:00
  Ending Date .............. 07/12/2025 00:00:00
  Antecedent Dry Days ...... 0.0
  Report Time Step ......... 00:01:00
  Wet Time Step ............ 00:01:00
  Dry Time Step ............ 00:01:00
  Routing Time Step ........ 1.00 sec
  Variable Time Step ....... NO
  Maximum Trials ........... 8
  Number of Threads ........ 1
  Head Tolerance ........... 0.001500 m


  **************************        Volume         Depth
  Runoff Quantity Continuity     hectare-m            mm
  **************************     ---------       -------
  Total Precipitation ......         0.597        93.915
  Evaporation Loss .........         0.000         0.000
  Infiltration Loss ........         0.107        16.802
  Surface Runoff ...........         0.483        75.996
  Final Storage ............         0.007         1.160
  Continuity Error (%) .....        -0.045


  **************************        Volume        Volume
  Flow Routing Continuity        hectare-m      10^6 ltr
  **************************     ---------     ---------
  Dry Weather Inflow .......         0.000         0.000
  Wet Weather Inflow .......         0.483         4.833
  Groundwater Inflow .......         0.000         0.000
  RDII Inflow ..............         0.000         0.000
  External Inflow ..........        22.306       223.067
  External Outflow .........        22.677       226.776
  Flooding Loss ............         0.000         0.000
  Evaporation Loss .........         0.000         0.000


  Exfiltration Loss ........         0.000         0.000
  Initial Stored Volume ....         0.125         1.247
  Final Stored Volume ......         0.242         2.423
  Continuity Error (%) .....        -0.023


  *******************************
  Highest Flow Instability Indexes
  *******************************
  Link 107--106 (68)


  **********************************
  Most Frequent Nonconverging Nodes
  **********************************
  Convergence obtained at all time steps.


  *************************
  Routing Time Step Summary
  *************************
  Minimum Time Step           :     1.00 sec
  Average Time Step           :     1.00 sec
  Maximum Time Step           :     1.00 sec
  % of Time in Steady State   :     0.00
  Average Iterations per Step :     2.00
  % of Steps Not Converging   :     0.00


  ***************************
  Subcatchment Runoff Summary
  ***************************


-----------------------------------------------------------------------------------------------------------
-------------------
                           Total      Total      Total      Total     Imperv       Perv      Total
Total     Peak  Runoff
                          Precip      Runon       Evap      Infil     Runoff     Runoff     Runoff
```

```
Runoff   Runoff   Coeff
  Subcatchment                  mm         mm         mm         mm         mm         mm         mm    10^6
ltr      LPS

-----------------------------------------------------------------------------------------------------------------
-------------------
  BLDG                     93.92       0.00       0.00       0.00      92.39       0.00      92.39
0.17    62.92   0.984
  L100A                    93.91       0.00       0.00      35.05      42.24      15.95      58.19
0.13    69.21   0.620
  L101A                    93.92       0.00       0.00       2.67      88.42       1.35      89.78
0.33   125.33   0.956
  L102A                    93.92       0.00       0.00       0.00      92.38       0.00      92.38
0.15    54.28   0.984
  L103A                    93.92       0.00       0.00       3.57      87.10       1.80      88.90
0.27   103.96   0.947
  L104A                    93.91       0.00       0.00      24.89      56.76      11.34      68.10
0.11    49.21   0.725
  L105A                    93.91       0.00       0.00       3.57      87.10       1.80      88.90
0.91   348.71   0.947
  L107A                    93.92       0.00       0.00      16.46      68.63       7.70      76.33
0.43   185.91   0.813
  L108A                    93.92       0.00       0.00      14.52      71.27       6.95      78.22
0.48   205.76   0.833
  L108B                    93.92       0.00       0.00      21.10      62.03       9.77      71.80
0.34   152.83   0.765
  L110A                    93.91       0.00       0.00       0.00      92.39       0.00      92.39
0.20    74.18   0.984
  L111A                    93.92       0.00       0.00       3.57      87.11       1.80      88.91
0.41   157.31   0.947
  L112A                    93.92       0.00       0.00      14.52      71.27       6.95      78.22
0.22    94.95   0.833
  POND                     93.91       0.00       0.00      24.96      55.45      12.64      68.09
0.19    93.73   0.725
  SOMME1                   93.92       0.00       0.00       0.00      92.43       0.00      92.43
0.22    82.63   0.984
  SOMME2                   93.92       0.00       0.00       0.00      92.42       0.00      92.42
0.03    10.33   0.984
  UNC-1                    93.92       0.00       0.00      63.41       0.00      30.53      30.53
```

```
0.13   122.56   0.325
  UNC-2                    93.91       0.00       0.00      61.47       6.59      32.37      32.37
0.11   107.45   0.345
```

****
Node Depth Summary
****

Node	Type	Average Depth Meters	Maximum Depth Meters	Maximum HGL Meters	Time of Max Occurrence days hr:min	Reported Max Depth Meters
RIDEAU	OUTFALL	0.00	0.00	0.00	0 00:00	0.00
SOMME	OUTFALL	0.69	0.77	89.08	0 06:01	0.77
100	STORAGE	0.89	1.51	90.43	0 06:00	1.51
101	STORAGE	0.66	1.33	90.49	0 06:00	1.33
102	STORAGE	0.41	1.22	90.64	0 06:00	1.22
103	STORAGE	0.30	1.21	90.74	0 06:00	1.21
103A	STORAGE	0.05	1.05	90.93	0 06:00	1.05
104	STORAGE	0.09	1.21	91.01	0 06:00	1.21
105	STORAGE	0.43	1.42	90.82	0 06:00	1.42
106	STORAGE	0.18	1.24	90.95	0 06:00	1.24
107	STORAGE	0.17	1.65	91.39	0 06:02	1.65
108	STORAGE	0.08	1.45	91.46	0 06:02	1.45
108A	STORAGE	0.06	1.25	91.54	0 06:02	1.25
108B	STORAGE	0.06	1.23	91.49	0 06:04	1.23
109	STORAGE	0.18	1.19	90.88	0 06:00	1.18
110	STORAGE	0.08	1.37	91.22	0 06:00	1.37
111	STORAGE	0.05	1.41	91.38	0 06:00	1.41
112	STORAGE	0.04	1.23	91.19	0 06:00	1.23
C1-I	STORAGE	0.86	1.07	89.88	0 06:00	1.07
C1-O	STORAGE	0.84	0.92	89.58	0 06:01	0.92
C2-I	STORAGE	1.09	1.15	90.80	0 06:00	1.15
C2-O	STORAGE	0.81	0.82	90.28	0 06:00	0.82
CULV-DS	STORAGE	0.95	1.00	90.82	0 06:00	1.00
CULV-US	STORAGE	1.17	1.22	91.19	0 06:00	1.22
POND-S	STORAGE	2.21	2.73	90.33	0 06:04	2.73

****
Node Inflow Summary
****

Node	Type	Maximum Lateral Inflow LPS	Maximum Total Inflow LPS	Time of Max Occurrence days hr:min	Lateral Inflow Volume 10^6 ltr	Total Inflow Volume 10^6 ltr	Flow Balance Error Percent
RIDEAU	OUTFALL	122.56	122.56	0 06:00	0.126	0.126	0.000
SOMME	OUTFALL	0.00	3486.73	0 06:01	0	227	0.000
100	STORAGE	69.21	1217.11	0 06:00	0.134	4.11	0.170
101	STORAGE	0.00	807.74	0 05:53	0	3.08	0.640
102	STORAGE	62.92	357.69	0 06:00	0.169	0.914	0.364
103	STORAGE	54.28	297.06	0 06:00	0.146	0.746	0.089
103A	STORAGE	103.96	103.96	0 06:00	0.27	0.27	0.047
104	STORAGE	49.21	142.52	0 06:00	0.107	0.33	-0.045
105	STORAGE	474.04	672.69	0 05:55	1.23	2.49	0.578
106	STORAGE	0.00	255.42	0 06:07	0	1.26	-0.023
107	STORAGE	185.91	304.20	0 06:00	0.433	1.26	-0.003
108	STORAGE	0.00	212.56	0 05:47	0	0.824	0.077
108A	STORAGE	205.76	205.76	0 06:00	0.484	0.484	0.129
108B	STORAGE	152.83	152.83	0 06:00	0.341	0.341	0.131
109	STORAGE	0.00	225.98	0 05:54	0	0.608	0.038
110	STORAGE	74.18	229.48	0 05:54	0.199	0.608	0.022
111	STORAGE	157.31	157.31	0 06:00	0.409	0.409	0.052
112	STORAGE	94.95	94.95	0 06:00	0.223	0.223	0.116
C1-I	STORAGE	82.63	3513.21	0 06:00	0.222	227	0.017
C1-O	STORAGE	0.00	3485.94	0 06:01	0	227	0.035
C2-I	STORAGE	107.45	2698.57	0 06:00	0.114	223	0.022
C2-O	STORAGE	0.00	2697.50	0 06:00	0	223	0.069
CULV-DS	STORAGE	10.33	2786.51	0 00:00	0.0277	223	0.035
CULV-US	STORAGE	2581.80	2581.80	0 00:00	223	223	0.009
POND-S	STORAGE	93.73	1308.93	0 06:00	0.194	5.67	0.055

****
Node Surcharge Summary
****

No nodes were surcharged.

****
Node Flooding Summary
****

No nodes were flooded.

****
Storage Volume Summary
****

Storage Unit	Average Volume 1000 m	Avg Pcnt Full	Evap Pcnt Loss	Exfil Pcnt Loss	Maximum Volume 1000 m	Max Pcnt Full	Time of Max Occurrence days hr:min	Maximum Outflow LPS
100	0.001	43.0	0.0	0.0	0.002	72.9	0 06:00	1215.22
101	0.001	33.9	0.0	0.0	0.002	69.0	0 06:00	799.41
102	0.000	18.5	0.0	0.0	0.001	55.9	0 06:00	356.26
103	0.000	0.3	0.0	0.0	0.001	1.0	0 06:00	295.99
103A	0.000	0.0	0.0	0.0	0.001	0.3	0 06:00	102.71
104	0.000	0.1	0.0	0.0	0.001	0.9	0 06:00	140.75
105	0.001	0.4	0.0	0.0	0.052	26.8	0 06:00	601.18
106	0.000	9.1	0.0	0.0	0.001	64.1	0 06:00	277.30
107	0.001	0.2	0.0	0.0	0.070	17.9	0 06:02	255.42
108	0.000	5.2	0.0	0.0	0.002	89.6	0 06:02	204.21
108A	0.002	0.5	0.0	0.0	0.101	26.6	0 06:02	141.19
108B	0.001	0.3	0.0	0.0	0.076	17.6	0 06:04	95.89
109	0.000	9.9	0.0	0.0	0.001	67.1	0 06:00	222.56
110	0.000	0.1	0.0	0.0	0.002	1.2	0 06:00	225.98
111	0.000	0.0	0.0	0.0	0.002	1.1	0 06:00	158.45
112	0.000	0.0	0.0	0.0	0.001	0.5	0 06:00	93.32

C1-I	0.000	0.0	0.0	0.0	0.000	0.0	0	00:00	3485.94
C1-O	0.000	0.0	0.0	0.0	0.000	0.0	0	00:00	3486.73
C2-I	0.000	0.0	0.0	0.0	0.000	0.0	0	00:00	2697.50
C2-O	0.000	0.0	0.0	0.0	0.000	0.0	0	00:00	2697.13
CULV-DS	0.000	0.0	0.0	0.0	0.000	0.0	0	00:00	2626.75
CULV-US	0.000	0.0	0.0	0.0	0.000	0.0	0	00:00	2786.51
POND-S	2.040	42.9	0.0	0.0	3.208	67.4	0	06:04	802.86

****
Outfall Loading Summary
****

Outfall Node	Flow Freq Pcnt	Avg Flow LPS	Max Flow LPS	Total Volume 10^6 ltr
RIDEAU	4.56	32.11	122.56	0.126
SOMME	99.91	2625.57	3486.73	226.648
System	52.23	2657.68	3585.97	226.775

****
Link Flow Summary
****

Link	Type	Maximum |Flow| LPS	Time of Max Occurrence days hr:min	Maximum |Veloc| m/sec	Max/ Full Flow	Max/ Full Depth
100--POND-S	CONDUIT	1215.22	0 06:00	1.40	1.16	1.00
101--100	CONDUIT	799.41	0 05:54	0.92	0.67	1.00
102--101	CONDUIT	356.26	0 06:00	1.26	1.50	1.00
103--102	CONDUIT	295.99	0 06:00	1.37	1.54	1.00
103A--103	CONDUIT	102.71	0 06:00	0.93	0.93	1.00
104--103	CONDUIT	140.75	0 06:00	1.27	1.47	1.00
105--101	CONDUIT	601.18	0 05:49	1.36	1.39	1.00
106--105	CONDUIT	277.30	0 06:06	0.98	1.01	1.00
108--107	CONDUIT	204.21	0 06:21	0.94	1.06	1.00
108A--108	CONDUIT	141.19	0 06:31	1.28	1.14	1.00
108B--108	CONDUIT	95.89	0 06:21	0.87	0.87	1.00
109--101	CONDUIT	222.56	0 05:55	1.40	1.56	1.00
110--109	CONDUIT	225.98	0 05:54	1.42	1.58	1.00
111--110	CONDUIT	158.45	0 06:01	1.00	1.11	1.00
112--104	CONDUIT	93.32	0 06:00	0.84	1.05	1.00
C1	CONDUIT	3485.94	0 06:01	1.65	1.11	0.98
C2	CONDUIT	2697.50	0 06:00	1.96	1.39	1.00
C3	CONDUIT	2626.75	0 00:01	1.62	0.33	0.84
C4	CONDUIT	2786.51	0 00:00	2.21	1.35	1.00
D1	CONDUIT	3486.73	0 06:01	1.83	0.37	0.66
D2	CONDUIT	2697.13	0 06:00	1.65	0.28	0.71
107--106	ORIFICE	255.42	0 06:07			1.00
OR1	ORIFICE	14.97	0 06:06			1.00
OR2	WEIR	787.95	0 06:04			0.62
W1	WEIR	0.00	0 00:00			0.00

****
Flow Classification Summary
****

Conduit	Adjusted /Actual Length	Dry	Up Dry	Down Dry	Sub Crit	Sup Crit	Up Crit	Down Crit	Norm Ltd	Inlet Ctrl
		---------- Fraction of Time in Flow Class ----------								
100--POND-S	1.00	0.00	0.00	0.00	1.00	0.00	0.00	0.00	0.00	0.00
101--100	1.00	0.00	0.00	0.00	1.00	0.00	0.00	0.00	0.00	0.00
102--101	1.00	0.03	0.00	0.00	0.93	0.00	0.00	0.05	0.00	0.00
103--102	1.00	0.03	0.00	0.00	0.87	0.00	0.00	0.10	0.00	0.00
103A--103	1.00	0.03	0.00	0.00	0.81	0.00	0.00	0.17	0.45	0.00
104--103	1.00	0.03	0.00	0.00	0.80	0.00	0.00	0.17	0.22	0.00
105--101	1.00	0.00	0.03	0.00	0.97	0.00	0.00	0.00	0.08	0.00
106--105	1.00	0.03	0.00	0.00	0.85	0.00	0.00	0.12	0.05	0.00
108--107	1.00	0.03	0.00	0.00	0.36	0.00	0.00	0.61	0.19	0.00

108A--108	1.00	0.03	0.00	0.00	0.04	0.00	0.00	0.93	0.00	0.00
108B--108	1.00	0.03	0.00	0.00	0.04	0.00	0.00	0.93	0.00	0.00
109--101	1.00	0.03	0.00	0.00	0.86	0.00	0.00	0.11	0.06	0.00
110--109	1.00	0.03	0.00	0.00	0.75	0.00	0.00	0.23	0.30	0.00
111--110	1.00	0.03	0.00	0.00	0.44	0.00	0.00	0.53	0.30	0.00
112--104	1.00	0.03	0.00	0.00	0.51	0.00	0.00	0.46	0.42	0.00
C1	1.00	0.00	0.00	0.00	1.00	0.00	0.00	0.00	0.00	0.00
C2	1.00	0.00	0.00	0.00	1.00	0.00	0.00	0.00	0.00	0.00
C3	1.00	0.00	0.00	0.00	1.00	0.00	0.00	0.00	0.00	0.00
C4	1.00	0.00	0.00	0.00	1.00	0.00	0.00	0.00	0.00	0.00
D1	1.00	0.00	0.00	0.00	1.00	0.00	0.00	0.00	0.00	0.00
D2	1.00	0.00	0.00	0.00	1.00	0.00	0.00	0.00	1.00	0.00

****
Conduit Surcharge Summary
****

Conduit	Hours Full: Both Ends	Hours Full: Upstream	Hours Full: Dnstream	Hours Above Full Normal Flow	Hours Capacity Limited
100--POND-S	2.84	2.84	4.31	0.23	0.36
101--100	0.76	0.78	0.78	0.01	0.54
102--101	1.78	1.78	2.84	0.24	0.28
103--102	1.40	1.40	1.60	0.24	0.27
103A--103	0.65	0.65	1.40	0.01	0.01
104--103	0.88	0.88	1.40	0.23	0.24
105--101	0.98	0.98	2.59	0.33	0.33
106--105	0.77	0.77	1.02	0.01	0.25
108--107	0.79	0.79	0.85	0.16	0.21
108A--108	0.78	0.78	0.79	0.02	0.21
108B--108	0.78	0.78	0.79	0.01	0.17
109--101	0.97	0.97	2.59	0.25	0.25
110--109	0.55	0.55	0.81	0.25	0.27
111--110	0.33	0.33	0.45	0.20	0.24
112--104	0.42	0.42	0.81	0.11	0.19
C1	0.01	0.66	0.01	0.61	0.01
C2	0.04	23.98	0.04	23.99	0.04
C4	23.98	23.99	23.98	24.00	23.98

Analysis begun on: Fri Sep 4 14:38:51 2026
Analysis ended on: Fri Sep 4 14:38:54 2026
Total elapsed time: 00:00:03

B.4 Pond Design Calculations

Project Name: 301 Somme Street
Project No.: 160402138

Water Quality Storage Requirements

SWMP ID	SWMP Type	Area (ha)	% Impervious	Protection Level	Unit Volume Requirements (m3/ha)			Specific Volume Requirements (m3)			Volume Provided (m3)	
					Total Unit Vol.	Permanent Pool	Extended Det.	Total Vol.	Permanent Pool	Extended Det.	Permanent Pool	Extended Det.
Pond 1	Wet Pond	5.32	84.0%	Enhanced (80% TSS)	251.8	211.8	40.0	1340	1127	213	1241	752

Water quality volume requirements per Table 3.2, Stormwater Management Planning & Design Manual (MOE, 2003)

Protection Level	SWMP Type	Storage Volume (m3/ha) for Impervious Level			
		35%	55%	70%	85%
Enhanced (80% TSS)	Infiltration	25	30	35	40
Enhanced (80% TSS)	Wetland	80	105	120	140
Enhanced (80% TSS)	Hybrid Wetland	110	150	175	195
Enhanced (80% TSS)	Wet Pond	140	190	225	250
Normal (70% TSS)	Infiltration	20	20	25	30
Normal (70% TSS)	Wetland	60	70	80	90
Normal (70% TSS)	Hybrid Wetland	75	90	105	120
Normal (70% TSS)	Wet Pond	90	110	130	150
Basic (60% TSS)	Infiltration	20	20	20	20
Basic (60% TSS)	Wetland	60	60	60	60
Basic (60% TSS)	Hybrid Wetland	60	70	75	80
Basic (60% TSS)	Wet Pond	60	75	85	95
Basic (60% TSS)	Dry Pond	90	150	200	240

Project Name: 301 Somme Street
Project No.: 160402138

Outlet Structure Discharge Calculations

Control ID	Control Type	Invert	Width/Dia.	Height	Coefficient	Side Slope	End Coefficient
1	Orifice (Circ.)	89.30	0.102		0.61		
2	Weir (Rect.)	89.90	1.650	0.700	1.67		

Elevation (m)	Control 1 (L/s)	Control 2 (L/s)	Control 3 (L/s)	Control 4 (L/s)	Control 5 (L/s)	Total Discharge (L/s)
89.30	0	0				0
89.40	5	0				5
89.50	9	0				9
89.60	11	0				11
89.70	13	0				13
89.80	15	0				15
89.90	16	0				16
90.00	18	87				105
90.10	19	246				266
90.20	20	453				473
90.30	22	697				**719**
90.40	23	974				997
90.50	24	1281				1304
90.60	25	1614				1638
90.70	26	1972				1997
90.80	27	2353				2379

* Calculated pond discharge rates do not consider elevated HGL at pond outlet

Project Name: 301 Somme Street
Project No.: 160402138

Forebay Sizing Calculations

Settling Length per Equation 4.5 of Stormwater Management Planning and Design Manual (MOE, 2003)

$$Dist = \sqrt{\frac{rQp}{v_s}}$$

where:
Dist = Forebay Length (m)
r = Length-to-width ratio of forebay
Qp = Peak flow rate from the pond during design quality storm (m3/s)
Vs = Settling velocity (m/s)

r =	3	: 1		
Qp =	0.016	m3/s		
Vs =	0.0003	m/s		
Dist =	**12.6**	**m**	**Provided =**	**17 m**

Dispersion Length per Equation 4.6 of Stormwater Management Planning and Design Manual (MOE, 2003)

$$Dist = \frac{8Q}{dv_f}$$

where:
Dist = Forebay Length (m)
Q = Inlet flowrate during quality (25mm) event (m3/s) (See PCSWMM Model)
d = Depth of permanent pool in forebay less sediment depth
Vf = Desired forebay velocity (m/s)

Q =	0.637	m3/s		
d =	1.00	m		
Vf =	0.5	m/s		
Dist =	**10.2**	**m**	**Provided =**	**17 m**

Forebay Velocity

$$v = Q/A$$

where:
Q = Inlet flowrate during quality (25mm) event (m3/s) (See PCSWMM Model)
A = Forebay cross-sectional area (m2)
V = Desired forebay velocity (m/s)

Q =	0.637	m3/s		
A =	19.023	m2		
V =	**0.03**	**m/s**	**Target <=**	**0.15 m/s**

Forebay Deep Zone Bottom Width per Equation 4.7 of Stormwater Management Planning and Design Manual (MOE, 2003)

$$width = Dist/8$$

where:
width = Minimum width of forebay (m)
Dist = Forebay length (m) per Equation 4.6, 4.7

Dist =	12.6	m		
width =	**1.6**	**m**	**Provided =**	**5.7 m**

Forebay Surface Area per Table 4.6 of Stormwater Management Planning and Design Manual (MOE, 2003)

$$S = S\,A_f/S\,A_{pp}$$

where:
SAf = Forebay surface area (m2) @ PP elevation
SApp = Permanent pool surface area (m2)
S = Target forebay size (%)

SAf =	412.0	m2		
SApp =	1252.8	m2		
S =	**32.9**	**%**	**Target <=**	**33.3 %**

Cleanout Frequency (with reference to Table 6.3 of Stormwater Management Planning and Design Manual (MOE, 2003))

$$T_m = V_s/(L_s A_c P)$$

where:
Tm = Proposed SWMF maintenance timeframe (years)
Vs = Sediment storage volume (m3)
Ls = Sediment loading rate (m3/ha)
Ac = Pond catchment area (ha)
P = Removal efficiency = Level of Protection (%)

% Impervious	**35**	**55**	**70**	**80**
Loading (m3/ha)	0.6	1.9	2.8	3.8

Vs =	80	m3		
I =	84.0%	Contributing area imperviousness %		
Ls =	3.934	m3/ha per year		
Ac =	5.32	ha		
P =	80%	Enhanced (80% TSS)		
Tm =	**4.8**	**years**	**Target >=**	**5.0 years**

Project Name: 301 Somme Street
Project No.: 160402138

Extended Detention Drawdown Calculations

via falling head per Equation 4.10 of Stormwater Management Planning and Design Manual (MOE, 2003)

$$t = \left(h_1^{0.5} - h_0^{0.5}\right)\frac{2A_p}{CA_o(2g)^{0.5}}$$

where:

t = drawdown time (s)
h1 = starting water elevation above orifice (m)
h0 = ending water elevation above orifice (m)
Ap = pond surface area (m2)
Ao = cross-sectional area of orifice (m2)
C = orifice discharge coefficient

h1 =	0.6	m		
h0 =	0.0	m		
Ap =	1297	m2		
Ao =	0.00817	m2		
C =	0.61			
t =	**25.3**	**hrs**	**Target**	**24-48 hrs**

via falling head per Equation 4.11 of Stormwater Management Planning and Design Manual (MOE, 2003)

$$t = \frac{0.66C_2h^{1.5} + 2C_3h^{0.5}}{2.75A_o}$$

where:

t = drawdown time (s)
C2 = slope coefficient from area-depth linear regression
C3 = intercept from area-depth linear regression
h = maximum water elevation above orifice (m)
Ao = cross-sectional area of orifice (m2)

C2 =	1152.1	m/m		
C3 =	1297.0	m2		
h =	0.6	m2		
Ao =	0.00817	m2		
t =	**29.2**	**hrs**	**Target**	**24-48 hrs**

Project Name: 301 Somme Street
Project No.: 160402138

Stage Storage Calculations

Stage (m)	Discharge (L/s)	Storage Active (m3)	Storage Total (m3)	Depth (m)	Forebay Area (m2)	Forebay Inc. Volume (m3)	Forebay Accum. Volume (m3)	Main Cell Area (m2)	Main Cell Inc. Volume (m3)	Main Cell Accum. Volume (m3)
87.60	0	0	0	0.00	**37**	0	0	**126**	0	0
87.70	0	0	0	0.10	59	5	5	171	15	15
87.80	0	0	0	0.20	81	7	12	215	19	34
87.90	0	0	0	0.30	103	9	21	260	24	58
88.00	0	0	0	0.40	125	11	32	305	28	86
88.10	0	0	0	0.50	147	14	46	349	33	119
88.20	0	0	0	0.60	169	16	62	394	37	156
88.30	0	0	0	0.70	191	18	80	439	42	198
88.40	0	0	0	0.80	213	20	100	483	46	244
88.50	0	0	0	0.90	236	22	123	528	51	294
88.60	0	0	0	1.00	258	25	147	572	55	349
88.70	0	0	0	1.10	280	27	174	617	59	409
88.80	0	0	0	1.20	302	29	203	662	64	473
88.90	0	0	0	1.30	324	31	234	706	68	541
89.00	0	0	0	1.40	346	33	268	751	73	614
89.10	0	0	0	1.50	368	36	304	796	77	691
89.20	0	0	0	1.60	390	38	342	840	82	773
89.30	0	0	0	1.70	**412**	40	-	**885**	86	**1241**
89.40	5	0	0	1.80	-	-	-	1008	95	1336
89.50	9	0	0	1.90	-	-	-	1130	107	1443
89.60	11	119	119	2.00	-	-	-	1253	119	1562
89.70	13	131	251	2.10	-	-	-	1375	131	1693
89.80	15	144	394	2.20	-	-	-	1498	144	1837
89.90	16	156	550	2.30	-	-	-	1621	156	1993
90.00	105	168	718	2.40	-	-	-	1743	168	2161
90.10	266	180	899	2.50	-	-	-	1866	180	2341
90.20	473	193	1091	2.60	-	-	-	1988	193	2534
90.30	719	205	1296	2.70	-	-	-	2111	205	2739
90.40	997	217	1514	2.80	-	-	-	2233	217	2956
90.50	1304	229	1743	2.90	-	-	-	**2356**	229	3186
90.60	1638	239	1983	3.00	-	-	-	2433	239	3425
90.70	1997	247	2230	3.10	-	-	-	2509	247	3672
90.80	2379	255	2484	3.20	-	-	-	**2586**	255	**3927**

B.5 Oil/Grit Separator Sizing Calculations

Stormceptor®

Stormceptor® EF Sizing Report

Rinker MATERIALS™

Imbrium® Systems
ESTIMATED NET ANNUAL SEDIMENT (TSS) LOAD REDUCTION

04/08/2026

Province:	Ontario
City:	Ottawa
Nearest Rainfall Station:	OTTAWA CDA RCS
Climate Station Id:	6105978
Years of Rainfall Data:	20
Site Name:	STM 109
Drainage Area (ha):	0.68
Runoff Coefficient 'c':	0.87
Particle Size Distribution:	CA ETV
Target TSS Removal (%):	50.0
Required Water Quality Runoff Volume Capture (%):	90.00
Estimated Water Quality Flow Rate (L/s):	19.09
Oil / Fuel Spill Risk Site?	Yes
Upstream Flow Control?	No
Peak Conveyance (maximum) Flow Rate (L/s):	
Influent TSS Concentration (mg/L):	200
Estimated Average Annual Sediment Load (kg/yr):	466
Estimated Average Annual Sediment Volume (L/yr):	379

Project Name:	301 Somme
Project Number:	70465
Designer Name:	Dustin Thiffault
Designer Company:	Stantec Consulting Ltd.
Designer Email:	dustin.thiffault@stantec.com
Designer Phone:	613-724-4420
EOR Name:	
EOR Company:	
EOR Email:	
EOR Phone:	

Net Annual Sediment (TSS) Load Reduction Sizing Summary

Stormceptor Model	TSS Removal Provided (%)
EFO4	53
EFO5	57
EFO6	60
EFO8	64
EFO10	67
EFO12	68

Recommended Stormceptor EFO Model: EFO4

Estimated Net Annual Sediment (TSS) Load Reduction (%): 53

Water Quality Runoff Volume Capture (%): > 90

imbrium

THIRD-PARTY TESTING AND VERIFICATION

►**Stormceptor® EF and Stormceptor® EFO** are the latest evolutions in the Stormceptor® oil-grit separator (OGS) technology series, and are designed to remove a wide variety of pollutants from stormwater and snowmelt runoff. These technologies have been third-party tested in accordance with the Canadian ETV **Procedure for Laboratory Testing of Oil-Grit Separators** and performance has been third-party verified in accordance with the **ISO 14034 Environmental Technology Verification (ETV)** protocol.

PERFORMANCE

►**Stormceptor® EF and EFO** remove stormwater pollutants through gravity separation and floatation, and feature a patent-pending design that generates positive removal of total suspended solids (TSS) throughout each storm event, including high-intensity storms. Captured pollutants include sediment, free oils, and sediment-bound pollutants such as nutrients, heavy metals, and petroleum hydrocarbons. Stormceptor is sized to remove a high level of TSS from the frequent rainfall events that contribute the vast majority of annual runoff volume and pollutant load. The technology incorporates an internal bypass to convey excessive stormwater flows from high-intensity storms through the device without resuspension and washout (scour) of previously captured pollutants. Proper routine maintenance ensures high pollutant removal performance and protection of downstream waterwavs.

PARTICLE SIZE DISTRIBUTION (PSD)

►The **Canadian ETV PSD** shown in the table below was used, or in part, for this sizing. This is the identical PSD that is referenced in the Canadian ETV ***Procedure for Laboratory Testing of Oil-Grit Separators*** for both sediment removal testing and scour testing. The Canadian ETV PSD contains a wide range of particle sizes in the sand and silt fractions, and is considered reasonably representative of the particle size fractions found in typical urban stormwater runoff.

Particle Size (μm)	Percent Less Than	Particle Size Fraction (μm)	Percent
1000	100	500-1000	5
500	95	250-500	5
250	90	150-250	15
150	75	100-150	15
100	60	75-100	10
75	50	50-75	5
50	45	20-50	10
20	35	8-20	15
8	20	5-8	10
5	10	2-5	5
2	5	<2	5

Rainfall Intensity (mm / hr)	Percent Rainfall Volume (%)	Cumulative Rainfall Volume (%)	Flow Rate (L/s)	Flow Rate (L/min)	Surface Loading Rate (L/min/m²)	Removal Efficiency (%)	Incremental Removal (%)	Cumulative Removal (%)
0.50	8.6	8.6	0.82	49.0	41.0	70	6.1	6.1
1.00	20.3	29.0	1.64	99.0	82.0	64	13.0	19.1
2.00	16.2	45.2	3.29	197.0	164.0	57	9.3	28.4
3.00	12.0	57.2	4.93	296.0	247.0	53	6.3	34.7
4.00	8.4	65.6	6.58	395.0	329.0	50	4.3	39.0
5.00	5.9	71.6	8.22	493.0	411.0	48	2.8	41.8
6.00	4.6	76.2	9.87	592.0	493.0	45	2.1	43.9
7.00	3.1	79.3	11.51	691.0	576.0	43	1.3	45.2
8.00	2.7	82.0	13.16	789.0	658.0	42	1.1	46.4
9.00	3.3	85.3	14.80	888.0	740.0	41	1.4	47.7
10.00	2.3	87.6	16.45	987.0	822.0	41	0.9	48.7
11.00	1.6	89.2	18.09	1085.0	905.0	41	0.6	49.3
12.00	1.3	90.5	19.74	1184.0	987.0	40	0.5	49.8
13.00	1.7	92.2	21.38	1283.0	1069.0	39	0.7	50.5
14.00	1.2	93.5	23.03	1382.0	1151.0	38	0.5	51.0
15.00	1.2	94.6	24.67	1480.0	1233.0	37	0.4	51.4
16.00	0.7	95.3	26.31	1579.0	1316.0	35	0.2	51.6
17.00	0.7	96.1	27.96	1678.0	1398.0	34	0.3	51.9
18.00	0.4	96.5	29.60	1776.0	1480.0	32	0.1	52.0
19.00	0.4	96.9	31.25	1875.0	1562.0	31	0.1	52.2
20.00	0.2	97.1	32.89	1974.0	1645.0	29	0.1	52.2
21.00	0.5	97.5	34.54	2072.0	1727.0	28	0.1	52.3
22.00	0.2	97.8	36.18	2171.0	1809.0	26	0.1	52.4
23.00	1.0	98.8	37.83	2270.0	1891.0	25	0.3	52.7
24.00	0.3	99.1	39.47	2368.0	1974.0	24	0.1	52.7
25.00	0.0	99.1	41.12	2467.0	2056.0	23	0.0	52.7
30.00	0.9	100.0	49.34	2960.0	2467.0	19	0.2	52.9
35.00	0.0	100.0	57.56	3454.0	2878.0	17	0.0	52.9
40.00	0.0	100.0	65.79	3947.0	3289.0	15	0.0	52.9
45.00	0.0	100.0	74.01	4441.0	3700.0	13	0.0	52.9
Estimated Net Annual Sediment (TSS) Load Reduction =								**53 %**

Climate Station ID: 6105978 *Years of Rainfall Data*: 20

RAINFALL DATA FROM OTTAWA CDA RCS RAINFALL STATION

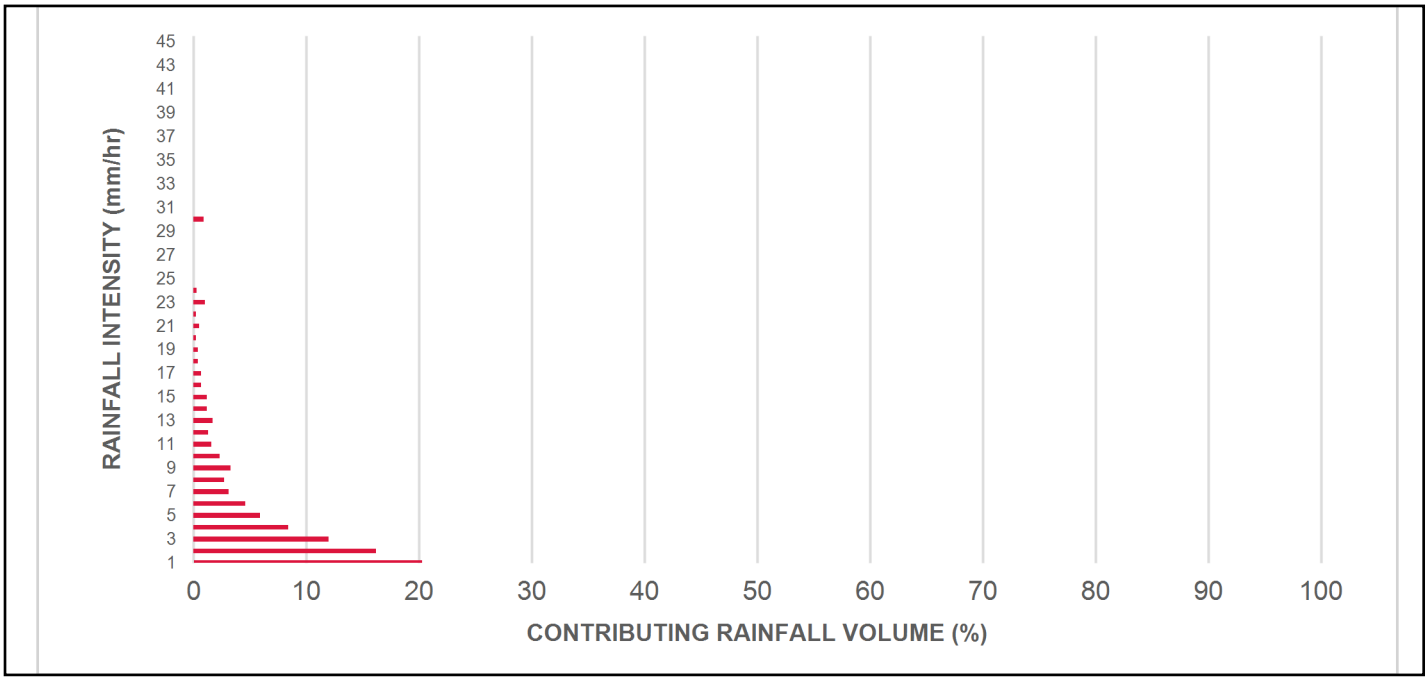

INCREMENTAL AND CUMULATIVE TSS REMOVAL FOR THE RECOMMENDED STORMCEPTOR® MODEL

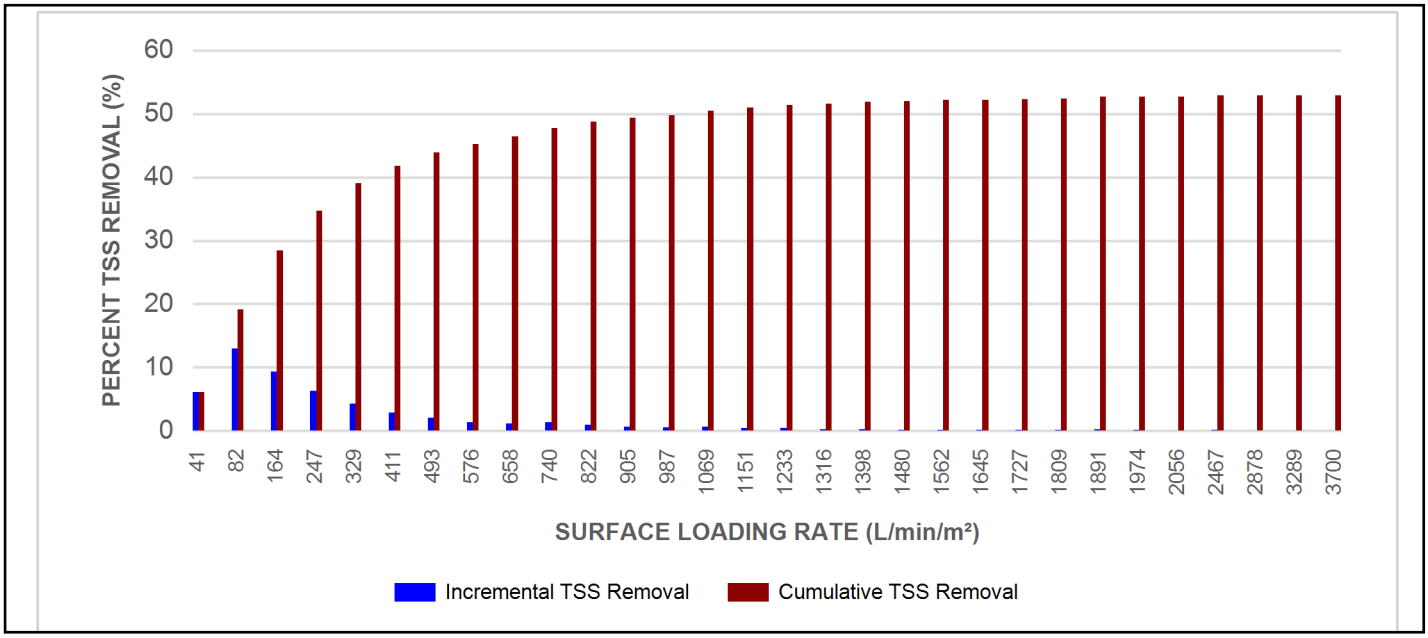

Maximum Pipe Diameter / Peak Conveyance

Stormceptor EF / EFO	Model Diameter		Min Angle Inlet / Outlet Pipes	Max Inlet Pipe Diameter		Max Outlet Pipe Diameter		Peak Conveyance Flow Rate	
	(m)	(ft)		(mm)	(in)	(mm)	(in)	(L/s)	(cfs)
EF4 / EFO4	1.2	4	90	609	24	609	24	425	15
EF5 / EFO5	1.5	5	90	762	30	762	30	710	25
EF6 / EFO6	1.8	6	90	914	36	914	36	990	35
EF8 / EFO8	2.4	8	90	1219	48	1219	48	1700	60
EF10 / EFO10	3.0	10	90	1828	72	1828	72	2830	100
EF12 / EFO12	3.6	12	90	1828	72	1828	72	2830	100

SCOUR PREVENTION AND ONLINE CONFIGURATION

►**Stormceptor® EF and EFO** feature an internal bypass and superior scour prevention technology that have been demonstrated in third-party testing according to the scour testing provisions of the Canadian ETV **Procedure for Laboratory Testing of Oil-Grit Separators**, and the exceptional scour test performance has been third-party verified in accordance with the ISO 14034 ETV protocol. As a result, Stormceptor EF and EFO are approved for online installation, eliminating the need for costly additional bypass structures, piping, and installation expense.

DESIGN FLEXIBILITY

►**Stormceptor® EF** and **EFO** offers design flexibility in one simplified platform, accepting stormwater flow from a single inlet pipe or multiple inlet pipes, and/or surface runoff through an inlet grate. The device can also serve as a junction structure, accommodate a 90-degree inlet-to-outlet bend angle, and can be modified to ensure performance in submerged conditions.

OIL CAPTURE AND RETENTION

►While Stormceptor® EF will capture and retain oil from dry weather spills and low intensity runoff, **Stormceptor® EFO** has demonstrated superior oil capture and greater than 99% oil retention in third-party testing according to the light liquid re-entrainment testing provisions of the Canadian ETV **Procedure for Laboratory Testing of Oil-Grit Separators**. Stormceptor EFO is recommended for sites where oil capture and retention is a requirement.

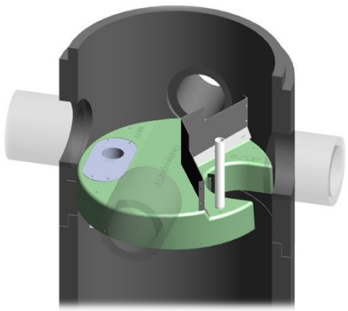

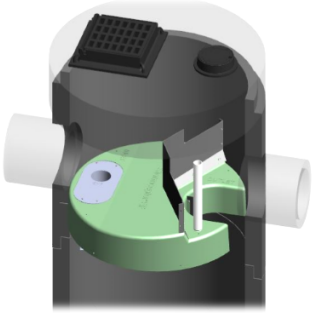

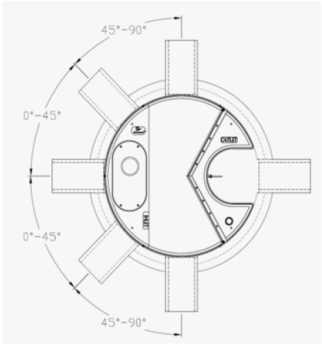

INLET-TO-OUTLET DROP

Elevation differential between inlet and outlet pipe inverts is dictated by the angle at which the inlet pipe(s) enters the unit.

0° - 45° : The inlet pipe is 1-inch (25mm) higher than the outlet pipe.

45° - 90° : The inlet pipe is 2-inches (50mm) higher than the outlet pipe.

HEAD LOSS

The head loss through Stormceptor EF is similar to that of a 60-degree bend structure. The applicable K value for calculating minor losses through the unit is 1.1. For submerged conditions the applicable K value is 3.0.

Pollutant Capacity

Stormceptor EF / EFO	Model Diameter		Depth (Outlet Pipe Invert to Sump Floor)		Oil Volume		Recommended Sediment Maintenance Depth *		Maximum Sediment Volume *		Maximum Sediment Mass **	
	(m)	(ft)	(m)	(ft)	(L)	(Gal)	(mm)	(in)	(L)	(ft^3)	(kg)	(lb)
EF4 / EFO4	1.2	4	1.52	5.0	265	70	203	8	1190	42	1904	5250
EF5 / EFO5	1.5	5	1.62	5.3	420	111	305	10	2124	75	2612	5758
EF6 / EFO6	1.8	6	1.93	6.3	610	160	305	12	3470	123	5552	15375
EF8 / EFO8	2.4	8	2.59	8.5	1070	280	610	24	8780	310	14048	38750
EF10 / EFO10	3.0	10	3.25	10.7	1670	440	610	24	17790	628	28464	78500
EF12 / EFO12	3.6	12	3.89	12.8	2475	655	610	24	31220	1103	49952	137875

*Increased sump depth may be added to increase sediment storage capacity

** Average density of wet packed sediment in sump = 1.6 kg/L (100 lb/ft^3)

Feature	Benefit	Feature Appeals To
Patent-pending enhanced flow treatment and scour prevention technology	Superior, verified third-party performance	Regulator, Specifying & Design Engineer
Third-party verified light liquid capture and retention for EFO version	Proven performance for fuel/oil hotspot locations	Regulator, Specifying & Design Engineer, Site Owner
Functions as bend, junction or inlet structure	Design flexibility	Specifying & Design Engineer
Minimal drop between inlet and outlet	Site installation ease	Contractor
Large diameter outlet riser for inspection and maintenance	Easy maintenance access from grade	Maintenance Contractor & Site Owner

STANDARD STORMCEPTOR EF/EFO DRAWINGS

For standard details, please visit http://www.imbriumsystems.com/stormwater-treatment-solutions/stormceptor-ef

STANDARD STORMCEPTOR EF/EFO SPECIFICATION

For specifications, please visit http://www.imbriumsystems.com/stormwater-treatment-solutions/stormceptor-ef

Table of TSS Removal vs Surface Loading Rate Based on Third-Party Test Results
Stormceptor® EFO

SLR (L/min/m²)	TSS % REMOVAL	SLR (L/min/m²)	TSS % REMOVAL	SLR (L/min/m²)	TSS % REMOVAL	SLR (L/min/m²)	TSS % REMOVAL
1	70	660	42	1320	35	1980	24
30	70	690	42	1350	35	2010	24
60	67	720	41	1380	34	2040	23
90	63	750	41	1410	34	2070	23
120	61	780	41	1440	33	2100	23
150	58	810	41	1470	32	2130	22
180	56	840	41	1500	32	2160	22
210	54	870	41	1530	31	2190	22
240	53	900	41	1560	31	2220	21
270	52	930	40	1590	30	2250	21
300	51	960	40	1620	29	2280	21
330	50	990	40	1650	29	2310	21
360	49	1020	40	1680	28	2340	20
390	48	1050	39	1710	28	2370	20
420	47	1080	39	1740	27	2400	20
450	47	1110	38	1770	27	2430	20
480	46	1140	38	1800	26	2460	19
510	45	1170	37	1830	26	2490	19
540	44	1200	37	1860	26	2520	19
570	43	1230	37	1890	25	2550	19
600	42	1260	36	1920	25	2580	18
630	42	1290	36	1950	24	2600	26

STANDARD PERFORMANCE SPECIFICATION FOR "OIL GRIT SEPARATOR" (OGS) STORMWATER QUALITY TREAMENT DEVICE

PART 1 – GENERAL

1.1 WORK INCLUDED

This section specifies requirements for selecting, sizing, and designing an underground Oil Grit Separator (OGS) device for stormwater quality treatment, with third-party testing results and a Statement of Verification in accordance with ISO 14034 Environmental Management – Environmental Technology Verification (ETV).

1.2 REFERENCE STANDARDS & PROCEDURES

ISO 14034:2016 Environmental management – Environmental technology verification (ETV)

Canadian Environmental Technology Verification (ETV) Program's **Procedure for Laboratory Testing of Oil-Grit Separators**

1.3 SUBMITTALS

1.3.1 All submittals, including sizing reports & shop drawings, shall be submitted upon request with each order to the contractor then forwarded to the Engineer of Record for review and acceptance. Shop drawings shall detail all OGS components, elevations, and sequence of construction.

1.3.2 Alternative devices shall have features identical to or greater than the specified device, including: treatment chamber diameter, treatment chamber wet volume, sediment storage volume, and oil storage volume.

1.3.3 Unless directed otherwise by the Engineer of Record, OGS stormwater quality treatment product substitutions or alternatives submitted within ten days prior to project bid shall not be accepted. All alternatives or substitutions submitted shall be signed and sealed by a local registered Professional Engineer, based on the exact same criteria detailed in Section 3, in entirety, subject to review and approval by the Engineer of Record.

PART 2 – PRODUCTS

2.1 OGS POLLUTANT STORAGE

The OGS device shall include a sump for sediment storage, and a protected volume for the capture and storage of petroleum hydrocarbons and buoyant gross pollutants. The minimum sediment & petroleum hydrocarbon storage capacity shall be as follows:

2.1.1	4 ft (1219 mm) Diameter OGS Units:	1.19 m^3 sediment / 265 L oil
	5 ft (1524 mm) Diameter OGS Units:	1.95 m^3 sediment / 420 L oil
	6 ft (1829 mm) Diameter OGS Units:	3.48 m^3 sediment / 609 L oil
	8 ft (2438 mm) Diameter OGS Units:	8.78 m^3 sediment / 1,071 L oil
	10 ft (3048 mm) Diameter OGS Units:	17.78 m^3 sediment / 1,673 L oil
	12 ft (3657 mm) Diameter OGS Units:	31.23 m^3 sediment / 2,476 L oil

PART 3 – PERFORMANCE & DESIGN

3.1 GENERAL

The OGS stormwater quality treatment device shall be verified in accordance with ISO 14034:2016 Environmental management – Environmental technology verification (ETV). The OGS stormwater quality treatment device shall remove oil, sediment and gross pollutants from stormwater runoff during frequent wet weather events, and retain these pollutants during less frequent high flow wet weather events below the insert within the OGS for later removal during maintenance. The Manufacturer shall have at least ten (10) years of local experience, history and success in engineering design, manufacturing and production and supply of OGS stormwater quality treatment device systems, acceptable to the Engineer of Record.

3.2 SIZING METHODOLOGY

The OGS device shall be engineered, designed and sized to provide stormwater quality treatment based on treating a minimum of 90 percent of the average annual runoff volume and a minimum removal of an annual average 60% of the sediment (TSS) load based on the Particle Size Distribution (PSD) specified in the sizing report for the specified device. Sizing of the OGS shall be determined by use of a minimum ten (10) years of local historical rainfall data provided by Environment Canada. Sizing shall also be determined by use of the sediment removal performance data derived from the ISO 14034 ETV third-party verified laboratory testing data from testing conducted in accordance with the Canadian ETV protocol Procedure for Laboratory Testing of Oil-Grit Separators, as follows:

3.2.1 Sediment removal efficiency for a given surface loading rate and its associated flow rate shall be based on sediment removal efficiency demonstrated at the seven (7) tested surface loading rates specified in the protocol, ranging 40 L/min/m^2 to 1400 L/min/m^2, and as stated in the ISO 14034 ETV Verification Statement for the OGS device.

3.2.2 Sediment removal efficiency for surface loading rates between 40 L/min/m^2 and 1400 L/min/m^2 shall be based on linear interpolation of data between consecutive tested surface loading rates.

3.2.3 Sediment removal efficiency for surface loading rates less than the lowest tested surface loading rate of 40 L/min/m^2 shall be assumed to be identical to the sediment removal efficiency at 40 L/min/m^2. No extrapolation shall be allowed that results in a sediment removal efficiency that is greater than that demonstrated at 40 L/min/m^2.

3.2.4 Sediment removal efficiency for surface loading rates greater than the highest tested surface loading rate of 1400 L/min/m^2 shall assume zero sediment removal for the portion of flow that exceeds 1400 L/min/m^2, and shall be calculated using a simple proportioning formula, with 1400 L/min/m^2 in the numerator and the higher surface loading rate in the denominator, and multiplying the resulting fraction times the sediment removal efficiency at 1400 L/min/m^2.

The OGS device shall also have sufficient annual sediment storage capacity as specified and calculated in Section 2.1.

3.3 CANADIAN ETV or ISO 14034 ETV VERIFICATION OF SCOUR TESTING

The OGS device shall have Canadian ETV or ISO 14034 ETV Verification of third-party scour testing conducted in accordance with the Canadian ETV Program's **Procedure for Laboratory Testing of Oil-Grit Separators.**

3.3.1 To be acceptable for on-line installation, the OGS device must demonstrate an average scour test effluent concentration less than 10 mg/L at each surface loading rate tested, up to and including 2600 L/min/m^2.

3.4 LIGHT LIQUID RE-ENTRAINMENT SIMULATION TESTING

The OGS device shall have Canadian ETV or ISO 14034 ETV Verification of completed third-party Light Liquid Re-entrainment Simulation Testing in accordance with the Canadian ETV **Program's Procedure for Laboratory Testing of Oil-Grit Separators,** with results reported within the Canadian ETV or ISO 14034 ETV verification. This re-

entrainment testing is conducted with the device pre-loaded with low density polyethylene (LDPE) plastic beads as a surrogate for light liquids such as oil and fuel. Testing is conducted on the same OGS unit tested for sediment removal to assess whether light liquids captured after a spill are effectively retained at high flow rates.

3.4.1 For an OGS device to be an acceptable stormwater treatment device on a site where vehicular traffic occurs and the potential for an oil or fuel spill exists, the OGS device must have reported verified performance results of greater than 99% cumulative retention of LDPE plastic beads for the five specified surface loading rates (ranging 200 L/min/m^2 to 2600 L/min/m^2) in accordance with the Light Liquid Re-entrainment Simulation Testing within the Canadian ETV Program's **Procedure for Laboratory Testing of Oil-Grit Separators.** However, an OGS device shall not be allowed if the Light Liquid Re-entrainment Simulation Testing was performed with screening components within the OGS device that are effective at retaining the LDPE plastic beads, but would not be expected to retain light liquids such as oil and fuel.

Stormceptor®

Stormceptor® EF Sizing Report

Rinker MATERIALS™

Imbrium® Systems
ESTIMATED NET ANNUAL SEDIMENT (TSS) LOAD REDUCTION

04/08/2026

Province:	Ontario
City:	Ottawa
Nearest Rainfall Station:	OTTAWA CDA RCS
Climate Station Id:	6105978
Years of Rainfall Data:	20

Project Name:	301 Somme
Project Number:	70465
Designer Name:	Dustin Thiffault
Designer Company:	Stantec Consulting Ltd.
Designer Email:	dustin.thiffault@stantec.com
Designer Phone:	613-724-4420
EOR Name:	
EOR Company:	
EOR Email:	
EOR Phone:	

Site Name:	CBMH 101A
Drainage Area (ha):	0.37
Runoff Coefficient 'c':	0.87
Particle Size Distribution:	CA ETV
Target TSS Removal (%):	50.0
Required Water Quality Runoff Volume Capture (%):	90.00
Estimated Water Quality Flow Rate (L/s):	10.39
Oil / Fuel Spill Risk Site?	Yes
Upstream Flow Control?	No
Peak Conveyance (maximum) Flow Rate (L/s):	
Influent TSS Concentration (mg/L):	200
Estimated Average Annual Sediment Load (kg/yr):	282
Estimated Average Annual Sediment Volume (L/yr):	229

Net Annual Sediment (TSS) Load Reduction Sizing Summary

Stormceptor Model	TSS Removal Provided (%)
EFO4	59
EFO5	62
EFO6	64
EFO8	68
EFO10	69
EFO12	70

Recommended Stormceptor EFO Model:	**EFO4**
Estimated Net Annual Sediment (TSS) Load Reduction (%):	**59**
Water Quality Runoff Volume Capture (%):	**> 90**

imbrium

THIRD-PARTY TESTING AND VERIFICATION

►**Stormceptor® EF and Stormceptor® EFO** are the latest evolutions in the Stormceptor® oil-grit separator (OGS) technology series, and are designed to remove a wide variety of pollutants from stormwater and snowmelt runoff. These technologies have been third-party tested in accordance with the Canadian ETV **Procedure for Laboratory Testing of Oil-Grit Separators** and performance has been third-party verified in accordance with the **ISO 14034 Environmental Technology Verification (ETV)** protocol.

PERFORMANCE

►**Stormceptor® EF and EFO** remove stormwater pollutants through gravity separation and floatation, and feature a patent-pending design that generates positive removal of total suspended solids (TSS) throughout each storm event, including high-intensity storms. Captured pollutants include sediment, free oils, and sediment-bound pollutants such as nutrients, heavy metals, and petroleum hydrocarbons. Stormceptor is sized to remove a high level of TSS from the frequent rainfall events that contribute the vast majority of annual runoff volume and pollutant load. The technology incorporates an internal bypass to convey excessive stormwater flows from high-intensity storms through the device without resuspension and washout (scour) of previously captured pollutants. Proper routine maintenance ensures high pollutant removal performance and protection of downstream waterwavs.

PARTICLE SIZE DISTRIBUTION (PSD)

►The **Canadian ETV PSD** shown in the table below was used, or in part, for this sizing. This is the identical PSD that is referenced in the Canadian ETV ***Procedure for Laboratory Testing of Oil-Grit Separators*** for both sediment removal testing and scour testing. The Canadian ETV PSD contains a wide range of particle sizes in the sand and silt fractions, and is considered reasonably representative of the particle size fractions found in typical urban stormwater runoff.

Particle Size (μm)	Percent Less Than	Particle Size Fraction (μm)	Percent
1000	100	500-1000	5
500	95	250-500	5
250	90	150-250	15
150	75	100-150	15
100	60	75-100	10
75	50	50-75	5
50	45	20-50	10
20	35	8-20	15
8	20	5-8	10
5	10	2-5	5
2	5	<2	5

Rainfall Intensity (mm / hr)	Percent Rainfall Volume (%)	Cumulative Rainfall Volume (%)	Flow Rate (L/s)	Flow Rate (L/min)	Surface Loading Rate (L/min/m²)	Removal Efficiency (%)	Incremental Removal (%)	Cumulative Removal (%)
0.50	8.6	8.6	0.45	27.0	22.0	70	6.1	6.1
1.00	20.3	29.0	0.89	54.0	45.0	70	14.3	20.4
2.00	16.2	45.2	1.79	107.0	89.0	63	10.2	30.6
3.00	12.0	57.2	2.68	161.0	134.0	60	7.2	37.8
4.00	8.4	65.6	3.58	215.0	179.0	57	4.8	42.6
5.00	5.9	71.6	4.47	268.0	224.0	53	3.2	45.8
6.00	4.6	76.2	5.37	322.0	268.0	52	2.4	48.2
7.00	3.1	79.3	6.26	376.0	313.0	51	1.6	49.7
8.00	2.7	82.0	7.16	430.0	358.0	50	1.4	51.1
9.00	3.3	85.3	8.05	483.0	403.0	48	1.6	52.7
10.00	2.3	87.6	8.95	537.0	447.0	47	1.1	53.8
11.00	1.6	89.2	9.84	591.0	492.0	45	0.7	54.5
12.00	1.3	90.5	10.74	644.0	537.0	44	0.6	55.0
13.00	1.7	92.2	11.63	698.0	582.0	43	0.7	55.8
14.00	1.2	93.5	12.53	752.0	626.0	42	0.5	56.3
15.00	1.2	94.6	13.42	805.0	671.0	42	0.5	56.8
16.00	0.7	95.3	14.32	859.0	716.0	41	0.3	57.1
17.00	0.7	96.1	15.21	913.0	761.0	41	0.3	57.4
18.00	0.4	96.5	16.11	966.0	805.0	41	0.2	57.5
19.00	0.4	96.9	17.00	1020.0	850.0	41	0.2	57.7
20.00	0.2	97.1	17.90	1074.0	895.0	41	0.1	57.8
21.00	0.5	97.5	18.79	1128.0	940.0	40	0.2	58.0
22.00	0.2	97.8	19.69	1181.0	984.0	40	0.1	58.1
23.00	1.0	98.8	20.58	1235.0	1029.0	40	0.4	58.5
24.00	0.3	99.1	21.48	1289.0	1074.0	39	0.1	58.6
25.00	0.0	99.1	22.37	1342.0	1119.0	38	0.0	58.6
30.00	0.9	100.0	26.85	1611.0	1342.0	35	0.3	58.9
35.00	0.0	100.0	31.32	1879.0	1566.0	31	0.0	58.9
40.00	0.0	100.0	35.80	2148.0	1790.0	27	0.0	58.9
45.00	0.0	100.0	40.27	2416.0	2013.0	24	0.0	58.9
Estimated Net Annual Sediment (TSS) Load Reduction =								**59 %**

Climate Station ID: 6105978 *Years of Rainfall Data*: 20

RAINFALL DATA FROM OTTAWA CDA RCS RAINFALL STATION

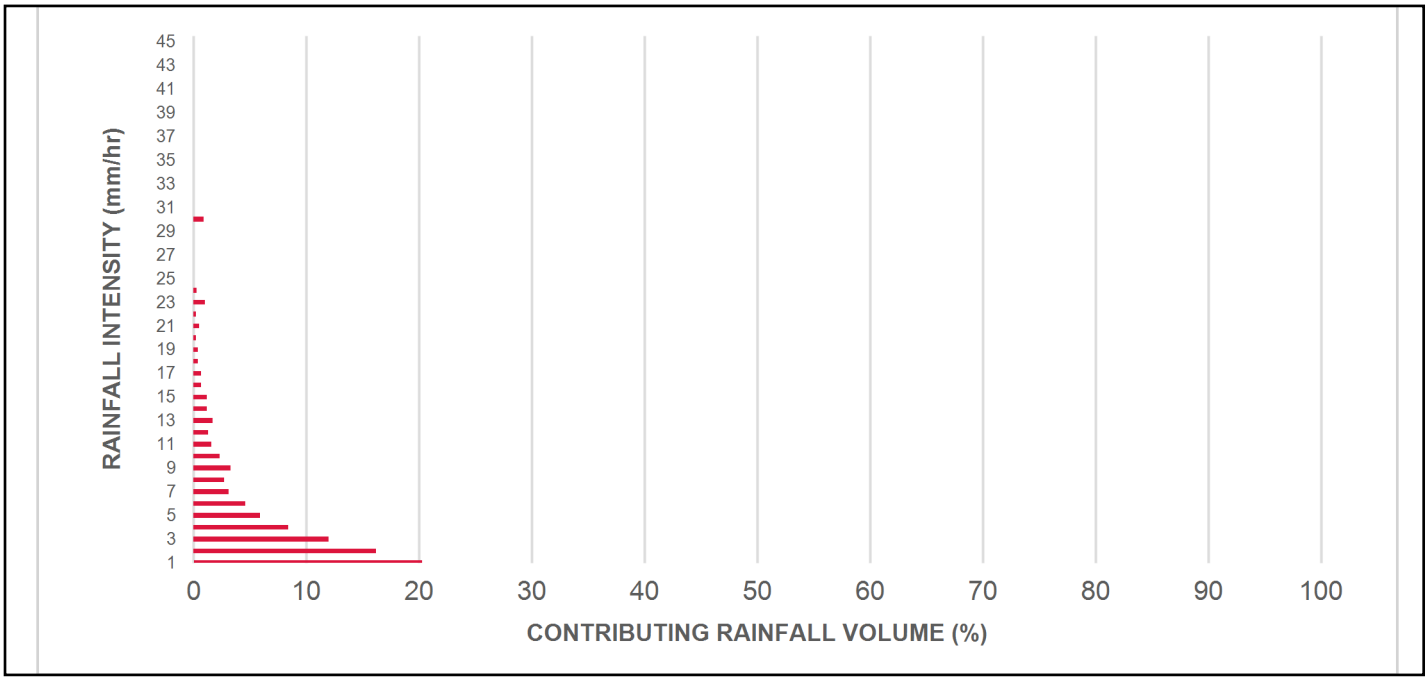

INCREMENTAL AND CUMULATIVE TSS REMOVAL FOR THE RECOMMENDED STORMCEPTOR® MODEL

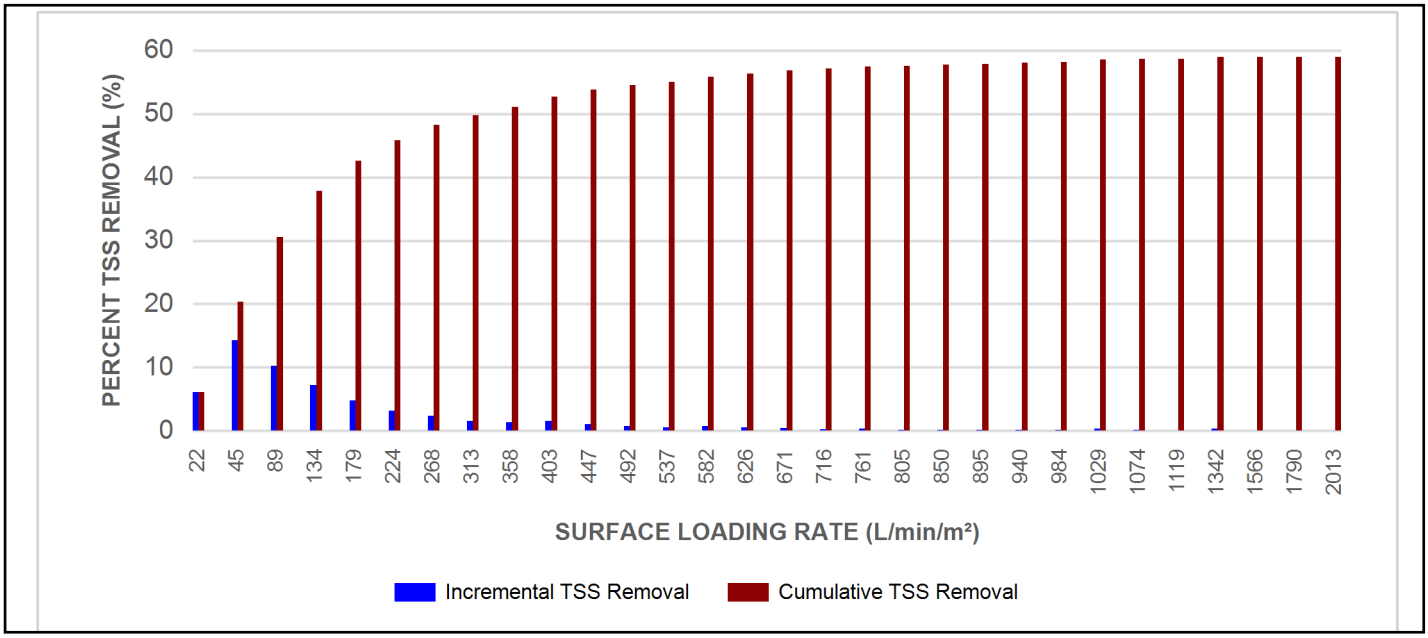

Maximum Pipe Diameter / Peak Conveyance

Stormceptor EF / EFO	Model Diameter		Min Angle Inlet / Outlet Pipes	Max Inlet Pipe Diameter		Max Outlet Pipe Diameter		Peak Conveyance Flow Rate	
	(m)	(ft)		(mm)	(in)	(mm)	(in)	(L/s)	(cfs)
EF4 / EFO4	1.2	4	90	609	24	609	24	425	15
EF5 / EFO5	1.5	5	90	762	30	762	30	710	25
EF6 / EFO6	1.8	6	90	914	36	914	36	990	35
EF8 / EFO8	2.4	8	90	1219	48	1219	48	1700	60
EF10 / EFO10	3.0	10	90	1828	72	1828	72	2830	100
EF12 / EFO12	3.6	12	90	1828	72	1828	72	2830	100

SCOUR PREVENTION AND ONLINE CONFIGURATION

►**Stormceptor® EF and EFO** feature an internal bypass and superior scour prevention technology that have been demonstrated in third-party testing according to the scour testing provisions of the Canadian ETV **Procedure for Laboratory Testing of Oil-Grit Separators**, and the exceptional scour test performance has been third-party verified in accordance with the ISO 14034 ETV protocol. As a result, Stormceptor EF and EFO are approved for online installation, eliminating the need for costly additional bypass structures, piping, and installation expense.

DESIGN FLEXIBILITY

►**Stormceptor® EF** and **EFO** offers design flexibility in one simplified platform, accepting stormwater flow from a single inlet pipe or multiple inlet pipes, and/or surface runoff through an inlet grate. The device can also serve as a junction structure, accommodate a 90-degree inlet-to-outlet bend angle, and can be modified to ensure performance in submerged conditions.

OIL CAPTURE AND RETENTION

►While Stormceptor® EF will capture and retain oil from dry weather spills and low intensity runoff, **Stormceptor® EFO** has demonstrated superior oil capture and greater than 99% oil retention in third-party testing according to the light liquid re-entrainment testing provisions of the Canadian ETV **Procedure for Laboratory Testing of Oil-Grit Separators**. Stormceptor EFO is recommended for sites where oil capture and retention is a requirement.

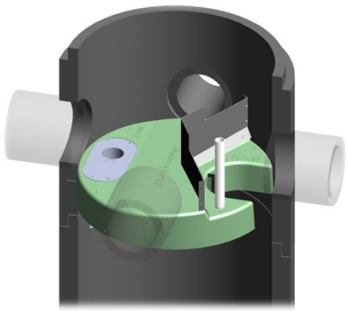

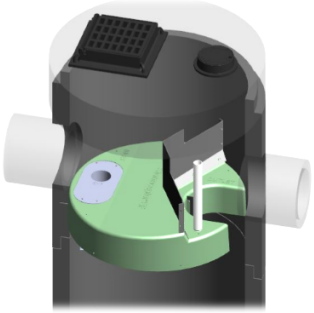

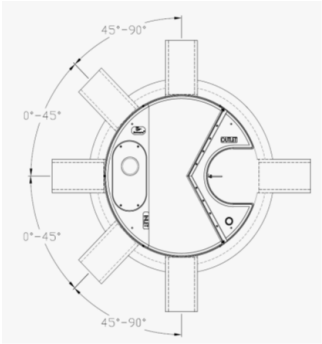

INLET-TO-OUTLET DROP

Elevation differential between inlet and outlet pipe inverts is dictated by the angle at which the inlet pipe(s) enters the unit.

0° - 45° : The inlet pipe is 1-inch (25mm) higher than the outlet pipe.

45° - 90° : The inlet pipe is 2-inches (50mm) higher than the outlet pipe.

HEAD LOSS

The head loss through Stormceptor EF is similar to that of a 60-degree bend structure. The applicable K value for calculating minor losses through the unit is 1.1. For submerged conditions the applicable K value is 3.0.

Pollutant Capacity

Stormceptor EF / EFO	Model Diameter		Depth (Outlet Pipe Invert to Sump Floor)		Oil Volume		Recommended Sediment Maintenance Depth *		Maximum Sediment Volume *		Maximum Sediment Mass **	
	(m)	(ft)	(m)	(ft)	(L)	(Gal)	(mm)	(in)	(L)	(ft^3)	(kg)	(lb)
EF4 / EFO4	1.2	4	1.52	5.0	265	70	203	8	1190	42	1904	5250
EF5 / EFO5	1.5	5	1.62	5.3	420	111	305	10	2124	75	2612	5758
EF6 / EFO6	1.8	6	1.93	6.3	610	160	305	12	3470	123	5552	15375
EF8 / EFO8	2.4	8	2.59	8.5	1070	280	610	24	8780	310	14048	38750
EF10 / EFO10	3.0	10	3.25	10.7	1670	440	610	24	17790	628	28464	78500
EF12 / EFO12	3.6	12	3.89	12.8	2475	655	610	24	31220	1103	49952	137875

*Increased sump depth may be added to increase sediment storage capacity

** Average density of wet packed sediment in sump = 1.6 kg/L (100 lb/ft^3)

Feature	Benefit	Feature Appeals To
Patent-pending enhanced flow treatment and scour prevention technology	Superior, verified third-party performance	Regulator, Specifying & Design Engineer
Third-party verified light liquid capture and retention for EFO version	Proven performance for fuel/oil hotspot locations	Regulator, Specifying & Design Engineer, Site Owner
Functions as bend, junction or inlet structure	Design flexibility	Specifying & Design Engineer
Minimal drop between inlet and outlet	Site installation ease	Contractor
Large diameter outlet riser for inspection and maintenance	Easy maintenance access from grade	Maintenance Contractor & Site Owner

STANDARD STORMCEPTOR EF/EFO DRAWINGS

For standard details, please visit http://www.imbriumsystems.com/stormwater-treatment-solutions/stormceptor-ef

STANDARD STORMCEPTOR EF/EFO SPECIFICATION

For specifications, please visit http://www.imbriumsystems.com/stormwater-treatment-solutions/stormceptor-ef

Table of TSS Removal vs Surface Loading Rate Based on Third-Party Test Results
Stormceptor® EFO

SLR (L/min/m²)	TSS % REMOVAL	SLR (L/min/m²)	TSS % REMOVAL	SLR (L/min/m²)	TSS % REMOVAL	SLR (L/min/m²)	TSS % REMOVAL
1	70	660	42	1320	35	1980	24
30	70	690	42	1350	35	2010	24
60	67	720	41	1380	34	2040	23
90	63	750	41	1410	34	2070	23
120	61	780	41	1440	33	2100	23
150	58	810	41	1470	32	2130	22
180	56	840	41	1500	32	2160	22
210	54	870	41	1530	31	2190	22
240	53	900	41	1560	31	2220	21
270	52	930	40	1590	30	2250	21
300	51	960	40	1620	29	2280	21
330	50	990	40	1650	29	2310	21
360	49	1020	40	1680	28	2340	20
390	48	1050	39	1710	28	2370	20
420	47	1080	39	1740	27	2400	20
450	47	1110	38	1770	27	2430	20
480	46	1140	38	1800	26	2460	19
510	45	1170	37	1830	26	2490	19
540	44	1200	37	1860	26	2520	19
570	43	1230	37	1890	25	2550	19
600	42	1260	36	1920	25	2580	18
630	42	1290	36	1950	24	2600	26

STANDARD PERFORMANCE SPECIFICATION FOR "OIL GRIT SEPARATOR" (OGS) STORMWATER QUALITY TREAMENT DEVICE

PART 1 – GENERAL

1.1 WORK INCLUDED

This section specifies requirements for selecting, sizing, and designing an underground Oil Grit Separator (OGS) device for stormwater quality treatment, with third-party testing results and a Statement of Verification in accordance with ISO 14034 Environmental Management – Environmental Technology Verification (ETV).

1.2 REFERENCE STANDARDS & PROCEDURES

ISO 14034:2016 Environmental management – Environmental technology verification (ETV)

Canadian Environmental Technology Verification (ETV) Program's **Procedure for Laboratory Testing of Oil-Grit Separators**

1.3 SUBMITTALS

1.3.1 All submittals, including sizing reports & shop drawings, shall be submitted upon request with each order to the contractor then forwarded to the Engineer of Record for review and acceptance. Shop drawings shall detail all OGS components, elevations, and sequence of construction.

1.3.2 Alternative devices shall have features identical to or greater than the specified device, including: treatment chamber diameter, treatment chamber wet volume, sediment storage volume, and oil storage volume.

1.3.3 Unless directed otherwise by the Engineer of Record, OGS stormwater quality treatment product substitutions or alternatives submitted within ten days prior to project bid shall not be accepted. All alternatives or substitutions submitted shall be signed and sealed by a local registered Professional Engineer, based on the exact same criteria detailed in Section 3, in entirety, subject to review and approval by the Engineer of Record.

PART 2 – PRODUCTS

2.1 OGS POLLUTANT STORAGE

The OGS device shall include a sump for sediment storage, and a protected volume for the capture and storage of petroleum hydrocarbons and buoyant gross pollutants. The minimum sediment & petroleum hydrocarbon storage capacity shall be as follows:

2.1.1	4 ft (1219 mm) Diameter OGS Units:	1.19 m^3 sediment / 265 L oil
	5 ft (1524 mm) Diameter OGS Units:	1.95 m^3 sediment / 420 L oil
	6 ft (1829 mm) Diameter OGS Units:	3.48 m^3 sediment / 609 L oil
	8 ft (2438 mm) Diameter OGS Units:	8.78 m^3 sediment / 1,071 L oil
	10 ft (3048 mm) Diameter OGS Units:	17.78 m^3 sediment / 1,673 L oil
	12 ft (3657 mm) Diameter OGS Units:	31.23 m^3 sediment / 2,476 L oil

PART 3 – PERFORMANCE & DESIGN

3.1 GENERAL

The OGS stormwater quality treatment device shall be verified in accordance with ISO 14034:2016 Environmental management – Environmental technology verification (ETV). The OGS stormwater quality treatment device shall remove oil, sediment and gross pollutants from stormwater runoff during frequent wet weather events, and retain these pollutants during less frequent high flow wet weather events below the insert within the OGS for later removal during maintenance. The Manufacturer shall have at least ten (10) years of local experience, history and success in engineering design, manufacturing and production and supply of OGS stormwater quality treatment device systems, acceptable to the Engineer of Record.

3.2 SIZING METHODOLOGY

The OGS device shall be engineered, designed and sized to provide stormwater quality treatment based on treating a minimum of 90 percent of the average annual runoff volume and a minimum removal of an annual average 60% of the sediment (TSS) load based on the Particle Size Distribution (PSD) specified in the sizing report for the specified device. Sizing of the OGS shall be determined by use of a minimum ten (10) years of local historical rainfall data provided by Environment Canada. Sizing shall also be determined by use of the sediment removal performance data derived from the ISO 14034 ETV third-party verified laboratory testing data from testing conducted in accordance with the Canadian ETV protocol Procedure for Laboratory Testing of Oil-Grit Separators, as follows:

3.2.1 Sediment removal efficiency for a given surface loading rate and its associated flow rate shall be based on sediment removal efficiency demonstrated at the seven (7) tested surface loading rates specified in the protocol, ranging 40 L/min/m^2 to 1400 L/min/m^2, and as stated in the ISO 14034 ETV Verification Statement for the OGS device.

3.2.2 Sediment removal efficiency for surface loading rates between 40 L/min/m^2 and 1400 L/min/m^2 shall be based on linear interpolation of data between consecutive tested surface loading rates.

3.2.3 Sediment removal efficiency for surface loading rates less than the lowest tested surface loading rate of 40 L/min/m^2 shall be assumed to be identical to the sediment removal efficiency at 40 L/min/m^2. No extrapolation shall be allowed that results in a sediment removal efficiency that is greater than that demonstrated at 40 L/min/m^2.

3.2.4 Sediment removal efficiency for surface loading rates greater than the highest tested surface loading rate of 1400 L/min/m^2 shall assume zero sediment removal for the portion of flow that exceeds 1400 L/min/m^2, and shall be calculated using a simple proportioning formula, with 1400 L/min/m^2 in the numerator and the higher surface loading rate in the denominator, and multiplying the resulting fraction times the sediment removal efficiency at 1400 L/min/m^2.

The OGS device shall also have sufficient annual sediment storage capacity as specified and calculated in Section 2.1.

3.3 CANADIAN ETV or ISO 14034 ETV VERIFICATION OF SCOUR TESTING

The OGS device shall have Canadian ETV or ISO 14034 ETV Verification of third-party scour testing conducted in accordance with the Canadian ETV Program's **Procedure for Laboratory Testing of Oil-Grit Separators.**

3.3.1 To be acceptable for on-line installation, the OGS device must demonstrate an average scour test effluent concentration less than 10 mg/L at each surface loading rate tested, up to and including 2600 L/min/m^2.

3.4 LIGHT LIQUID RE-ENTRAINMENT SIMULATION TESTING

The OGS device shall have Canadian ETV or ISO 14034 ETV Verification of completed third-party Light Liquid Re-entrainment Simulation Testing in accordance with the Canadian ETV **Program's Procedure for Laboratory Testing of Oil-Grit Separators,** with results reported within the Canadian ETV or ISO 14034 ETV verification. This re-

entrainment testing is conducted with the device pre-loaded with low density polyethylene (LDPE) plastic beads as a surrogate for light liquids such as oil and fuel. Testing is conducted on the same OGS unit tested for sediment removal to assess whether light liquids captured after a spill are effectively retained at high flow rates.

3.4.1 For an OGS device to be an acceptable stormwater treatment device on a site where vehicular traffic occurs and the potential for an oil or fuel spill exists, the OGS device must have reported verified performance results of greater than 99% cumulative retention of LDPE plastic beads for the five specified surface loading rates (ranging 200 L/min/m^2 to 2600 L/min/m^2) in accordance with the Light Liquid Re-entrainment Simulation Testing within the Canadian ETV Program's **Procedure for Laboratory Testing of Oil-Grit Separators.** However, an OGS device shall not be allowed if the Light Liquid Re-entrainment Simulation Testing was performed with screening components within the OGS device that are effective at retaining the LDPE plastic beads, but would not be expected to retain light liquids such as oil and fuel.

Stormceptor®

Stormceptor® EF Sizing Report

Rinker MATERIALS™

Imbrium® Systems
ESTIMATED NET ANNUAL SEDIMENT (TSS) LOAD REDUCTION

04/08/2026

Province:	Ontario
City:	Ottawa
Nearest Rainfall Station:	OTTAWA CDA RCS
Climate Station Id:	6105978
Years of Rainfall Data:	20

Project Name:	301 Somme
Project Number:	70465
Designer Name:	Dustin Thiffault
Designer Company:	Stantec Consulting Ltd.
Designer Email:	dustin.thiffault@stantec.com
Designer Phone:	613-724-4420
EOR Name:	
EOR Company:	
EOR Email:	
EOR Phone:	

Site Name:	STM 102
Drainage Area (ha):	0.91
Runoff Coefficient 'c':	0.87
Particle Size Distribution:	CA ETV
Target TSS Removal (%):	50.0
Required Water Quality Runoff Volume Capture (%):	90.00
Estimated Water Quality Flow Rate (L/s):	25.55
Oil / Fuel Spill Risk Site?	Yes
Upstream Flow Control?	No
Peak Conveyance (maximum) Flow Rate (L/s):	
Influent TSS Concentration (mg/L):	200
Estimated Average Annual Sediment Load (kg/yr):	588
Estimated Average Annual Sediment Volume (L/yr):	478

Net Annual Sediment (TSS) Load Reduction Sizing Summary

Stormceptor Model	TSS Removal Provided (%)
EFO4	50
EFO5	54
EFO6	58
EFO8	62
EFO10	65
EFO12	67

Recommended Stormceptor EFO Model:	**EFO4**
Estimated Net Annual Sediment (TSS) Load Reduction (%):	**50**
Water Quality Runoff Volume Capture (%):	**> 90**

imbrium

THIRD-PARTY TESTING AND VERIFICATION

►**Stormceptor® EF and Stormceptor® EFO** are the latest evolutions in the Stormceptor® oil-grit separator (OGS) technology series, and are designed to remove a wide variety of pollutants from stormwater and snowmelt runoff. These technologies have been third-party tested in accordance with the Canadian ETV **Procedure for Laboratory Testing of Oil-Grit Separators** and performance has been third-party verified in accordance with the **ISO 14034 Environmental Technology Verification (ETV)** protocol.

PERFORMANCE

►**Stormceptor® EF and EFO** remove stormwater pollutants through gravity separation and floatation, and feature a patent-pending design that generates positive removal of total suspended solids (TSS) throughout each storm event, including high-intensity storms. Captured pollutants include sediment, free oils, and sediment-bound pollutants such as nutrients, heavy metals, and petroleum hydrocarbons. Stormceptor is sized to remove a high level of TSS from the frequent rainfall events that contribute the vast majority of annual runoff volume and pollutant load. The technology incorporates an internal bypass to convey excessive stormwater flows from high-intensity storms through the device without resuspension and washout (scour) of previously captured pollutants. Proper routine maintenance ensures high pollutant removal performance and protection of downstream waterwavs.

PARTICLE SIZE DISTRIBUTION (PSD)

►The **Canadian ETV PSD** shown in the table below was used, or in part, for this sizing. This is the identical PSD that is referenced in the Canadian ETV ***Procedure for Laboratory Testing of Oil-Grit Separators*** for both sediment removal testing and scour testing. The Canadian ETV PSD contains a wide range of particle sizes in the sand and silt fractions, and is considered reasonably representative of the particle size fractions found in typical urban stormwater runoff.

Particle Size (μm)	Percent Less Than	Particle Size Fraction (μm)	Percent
1000	100	500-1000	5
500	95	250-500	5
250	90	150-250	15
150	75	100-150	15
100	60	75-100	10
75	50	50-75	5
50	45	20-50	10
20	35	8-20	15
8	20	5-8	10
5	10	2-5	5
2	5	<2	5

Rainfall Intensity (mm / hr)	Percent Rainfall Volume (%)	Cumulative Rainfall Volume (%)	Flow Rate (L/s)	Flow Rate (L/min)	Surface Loading Rate (L/min/m²)	Removal Efficiency (%)	Incremental Removal (%)	Cumulative Removal (%)
0.50	8.6	8.6	1.10	66.0	55.0	69	5.9	5.9
1.00	20.3	29.0	2.20	132.0	110.0	62	12.5	18.4
2.00	16.2	45.2	4.40	264.0	220.0	53	8.7	27.1
3.00	12.0	57.2	6.60	396.0	330.0	50	6.0	33.1
4.00	8.4	65.6	8.80	528.0	440.0	47	4.0	37.1
5.00	5.9	71.6	11.00	660.0	550.0	44	2.6	39.7
6.00	4.6	76.2	13.21	792.0	660.0	42	1.9	41.6
7.00	3.1	79.3	15.41	924.0	770.0	41	1.3	42.8
8.00	2.7	82.0	17.61	1056.0	880.0	41	1.1	44.0
9.00	3.3	85.3	19.81	1189.0	990.0	40	1.3	45.3
10.00	2.3	87.6	22.01	1321.0	1100.0	39	0.9	46.2
11.00	1.6	89.2	24.21	1453.0	1211.0	37	0.6	46.7
12.00	1.3	90.5	26.41	1585.0	1321.0	35	0.5	47.2
13.00	1.7	92.2	28.61	1717.0	1431.0	33	0.6	47.8
14.00	1.2	93.5	30.81	1849.0	1541.0	31	0.4	48.2
15.00	1.2	94.6	33.01	1981.0	1651.0	29	0.3	48.5
16.00	0.7	95.3	35.21	2113.0	1761.0	27	0.2	48.7
17.00	0.7	96.1	37.42	2245.0	1871.0	25	0.2	48.9
18.00	0.4	96.5	39.62	2377.0	1981.0	24	0.1	49.0
19.00	0.4	96.9	41.82	2509.0	2091.0	23	0.1	49.1
20.00	0.2	97.1	44.02	2641.0	2201.0	22	0.0	49.1
21.00	0.5	97.5	46.22	2773.0	2311.0	21	0.1	49.2
22.00	0.2	97.8	48.42	2905.0	2421.0	20	0.0	49.3
23.00	1.0	98.8	50.62	3037.0	2531.0	19	0.2	49.4
24.00	0.3	99.1	52.82	3169.0	2641.0	18	0.0	49.5
25.00	0.0	99.1	55.02	3301.0	2751.0	18	0.0	49.5
30.00	0.9	100.0	66.03	3962.0	3301.0	14	0.1	49.6
35.00	0.0	100.0	77.03	4622.0	3852.0	13	0.0	49.6
40.00	0.0	100.0	88.04	5282.0	4402.0	11	0.0	49.6
45.00	0.0	100.0	99.04	5943.0	4952.0	10	0.0	49.6
Estimated Net Annual Sediment (TSS) Load Reduction =								**50 %**

Climate Station ID: 6105978 *Years of Rainfall Data*: 20

RAINFALL DATA FROM OTTAWA CDA RCS RAINFALL STATION

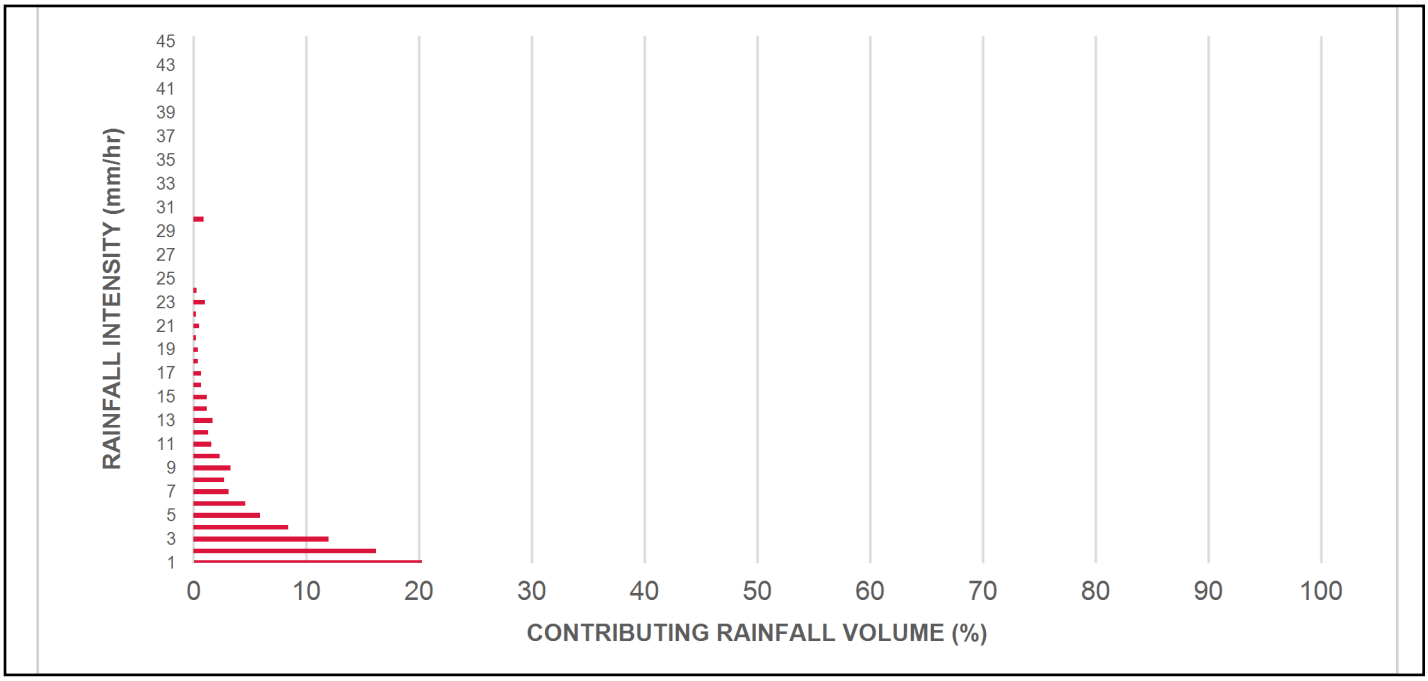

INCREMENTAL AND CUMULATIVE TSS REMOVAL FOR THE RECOMMENDED STORMCEPTOR® MODEL

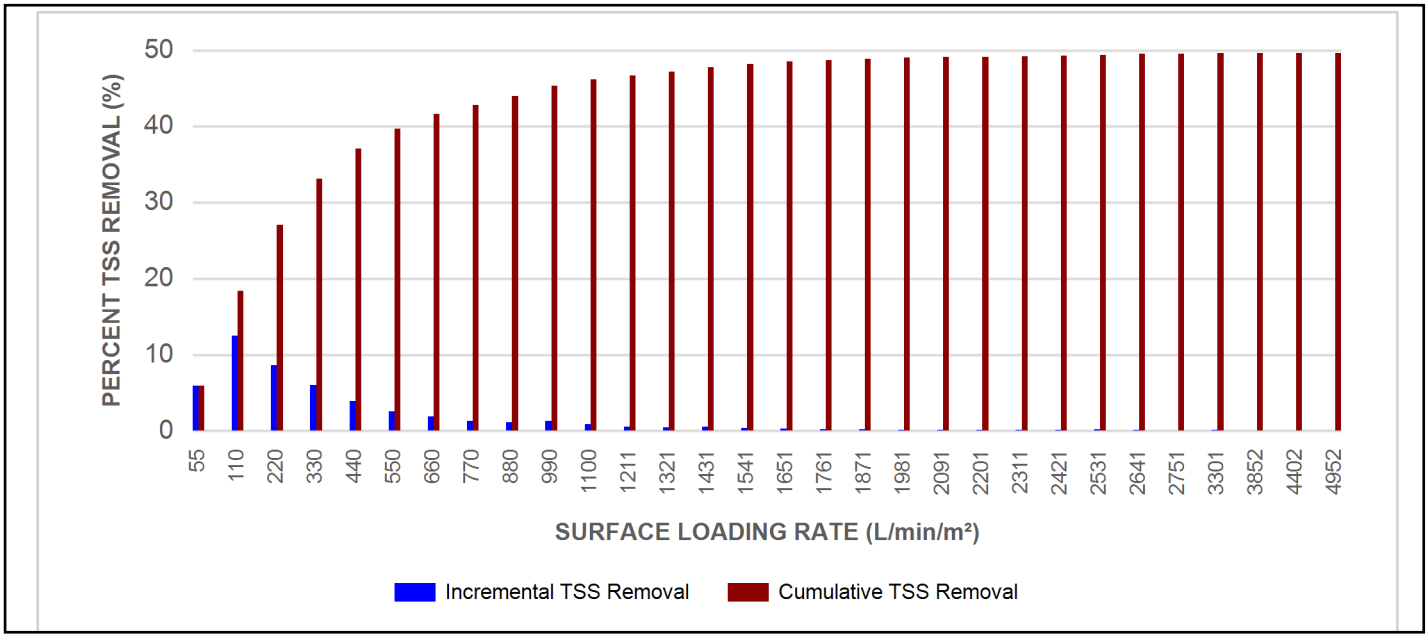

Maximum Pipe Diameter / Peak Conveyance

Stormceptor EF / EFO	Model Diameter		Min Angle Inlet / Outlet Pipes	Max Inlet Pipe Diameter		Max Outlet Pipe Diameter		Peak Conveyance Flow Rate	
	(m)	(ft)		(mm)	(in)	(mm)	(in)	(L/s)	(cfs)
EF4 / EFO4	1.2	4	90	609	24	609	24	425	15
EF5 / EFO5	1.5	5	90	762	30	762	30	710	25
EF6 / EFO6	1.8	6	90	914	36	914	36	990	35
EF8 / EFO8	2.4	8	90	1219	48	1219	48	1700	60
EF10 / EFO10	3.0	10	90	1828	72	1828	72	2830	100
EF12 / EFO12	3.6	12	90	1828	72	1828	72	2830	100

SCOUR PREVENTION AND ONLINE CONFIGURATION

►**Stormceptor® EF and EFO** feature an internal bypass and superior scour prevention technology that have been demonstrated in third-party testing according to the scour testing provisions of the Canadian ETV **Procedure for Laboratory Testing of Oil-Grit Separators**, and the exceptional scour test performance has been third-party verified in accordance with the ISO 14034 ETV protocol. As a result, Stormceptor EF and EFO are approved for online installation, eliminating the need for costly additional bypass structures, piping, and installation expense.

DESIGN FLEXIBILITY

►**Stormceptor® EF** and **EFO** offers design flexibility in one simplified platform, accepting stormwater flow from a single inlet pipe or multiple inlet pipes, and/or surface runoff through an inlet grate. The device can also serve as a junction structure, accommodate a 90-degree inlet-to-outlet bend angle, and can be modified to ensure performance in submerged conditions.

OIL CAPTURE AND RETENTION

►While Stormceptor® EF will capture and retain oil from dry weather spills and low intensity runoff, **Stormceptor® EFO** has demonstrated superior oil capture and greater than 99% oil retention in third-party testing according to the light liquid re-entrainment testing provisions of the Canadian ETV **Procedure for Laboratory Testing of Oil-Grit Separators**. Stormceptor EFO is recommended for sites where oil capture and retention is a requirement.

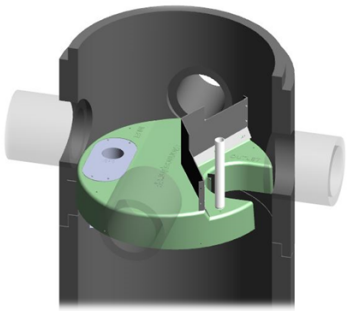

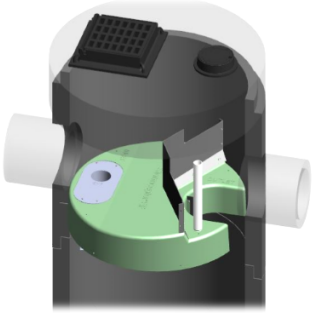

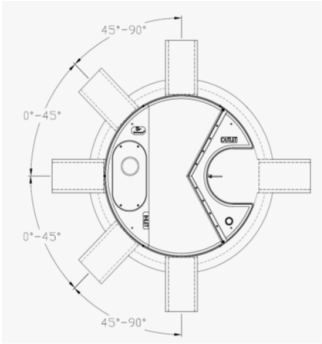

INLET-TO-OUTLET DROP

Elevation differential between inlet and outlet pipe inverts is dictated by the angle at which the inlet pipe(s) enters the unit.

0° - 45° : The inlet pipe is 1-inch (25mm) higher than the outlet pipe.

45° - 90° : The inlet pipe is 2-inches (50mm) higher than the outlet pipe.

HEAD LOSS

The head loss through Stormceptor EF is similar to that of a 60-degree bend structure. The applicable K value for calculating minor losses through the unit is 1.1. For submerged conditions the applicable K value is 3.0.

Pollutant Capacity

Stormceptor EF / EFO	Model Diameter		Depth (Outlet Pipe Invert to Sump Floor)		Oil Volume		Recommended Sediment Maintenance Depth *		Maximum Sediment Volume *		Maximum Sediment Mass **	
	(m)	(ft)	(m)	(ft)	(L)	(Gal)	(mm)	(in)	(L)	(ft^3)	(kg)	(lb)
EF4 / EFO4	1.2	4	1.52	5.0	265	70	203	8	1190	42	1904	5250
EF5 / EFO5	1.5	5	1.62	5.3	420	111	305	10	2124	75	2612	5758
EF6 / EFO6	1.8	6	1.93	6.3	610	160	305	12	3470	123	5552	15375
EF8 / EFO8	2.4	8	2.59	8.5	1070	280	610	24	8780	310	14048	38750
EF10 / EFO10	3.0	10	3.25	10.7	1670	440	610	24	17790	628	28464	78500
EF12 / EFO12	3.6	12	3.89	12.8	2475	655	610	24	31220	1103	49952	137875

*Increased sump depth may be added to increase sediment storage capacity

** Average density of wet packed sediment in sump = 1.6 kg/L (100 lb/ft^3)

Feature	Benefit	Feature Appeals To
Patent-pending enhanced flow treatment and scour prevention technology	Superior, verified third-party performance	Regulator, Specifying & Design Engineer
Third-party verified light liquid capture and retention for EFO version	Proven performance for fuel/oil hotspot locations	Regulator, Specifying & Design Engineer, Site Owner
Functions as bend, junction or inlet structure	Design flexibility	Specifying & Design Engineer
Minimal drop between inlet and outlet	Site installation ease	Contractor
Large diameter outlet riser for inspection and maintenance	Easy maintenance access from grade	Maintenance Contractor & Site Owner

STANDARD STORMCEPTOR EF/EFO DRAWINGS

For standard details, please visit http://www.imbriumsystems.com/stormwater-treatment-solutions/stormceptor-ef

STANDARD STORMCEPTOR EF/EFO SPECIFICATION

For specifications, please visit http://www.imbriumsystems.com/stormwater-treatment-solutions/stormceptor-ef

Table of TSS Removal vs Surface Loading Rate Based on Third-Party Test Results
Stormceptor® EFO

SLR (L/min/m²)	TSS % REMOVAL	SLR (L/min/m²)	TSS % REMOVAL	SLR (L/min/m²)	TSS % REMOVAL	SLR (L/min/m²)	TSS % REMOVAL
1	70	660	42	1320	35	1980	24
30	70	690	42	1350	35	2010	24
60	67	720	41	1380	34	2040	23
90	63	750	41	1410	34	2070	23
120	61	780	41	1440	33	2100	23
150	58	810	41	1470	32	2130	22
180	56	840	41	1500	32	2160	22
210	54	870	41	1530	31	2190	22
240	53	900	41	1560	31	2220	21
270	52	930	40	1590	30	2250	21
300	51	960	40	1620	29	2280	21
330	50	990	40	1650	29	2310	21
360	49	1020	40	1680	28	2340	20
390	48	1050	39	1710	28	2370	20
420	47	1080	39	1740	27	2400	20
450	47	1110	38	1770	27	2430	20
480	46	1140	38	1800	26	2460	19
510	45	1170	37	1830	26	2490	19
540	44	1200	37	1860	26	2520	19
570	43	1230	37	1890	25	2550	19
600	42	1260	36	1920	25	2580	18
630	42	1290	36	1950	24	2600	26

STANDARD PERFORMANCE SPECIFICATION FOR "OIL GRIT SEPARATOR" (OGS) STORMWATER QUALITY TREAMENT DEVICE

PART 1 – GENERAL

1.1 WORK INCLUDED

This section specifies requirements for selecting, sizing, and designing an underground Oil Grit Separator (OGS) device for stormwater quality treatment, with third-party testing results and a Statement of Verification in accordance with ISO 14034 Environmental Management – Environmental Technology Verification (ETV).

1.2 REFERENCE STANDARDS & PROCEDURES

ISO 14034:2016 Environmental management – Environmental technology verification (ETV)

Canadian Environmental Technology Verification (ETV) Program's **Procedure for Laboratory Testing of Oil-Grit Separators**

1.3 SUBMITTALS

1.3.1 All submittals, including sizing reports & shop drawings, shall be submitted upon request with each order to the contractor then forwarded to the Engineer of Record for review and acceptance. Shop drawings shall detail all OGS components, elevations, and sequence of construction.

1.3.2 Alternative devices shall have features identical to or greater than the specified device, including: treatment chamber diameter, treatment chamber wet volume, sediment storage volume, and oil storage volume.

1.3.3 Unless directed otherwise by the Engineer of Record, OGS stormwater quality treatment product substitutions or alternatives submitted within ten days prior to project bid shall not be accepted. All alternatives or substitutions submitted shall be signed and sealed by a local registered Professional Engineer, based on the exact same criteria detailed in Section 3, in entirety, subject to review and approval by the Engineer of Record.

PART 2 – PRODUCTS

2.1 OGS POLLUTANT STORAGE

The OGS device shall include a sump for sediment storage, and a protected volume for the capture and storage of petroleum hydrocarbons and buoyant gross pollutants. The minimum sediment & petroleum hydrocarbon storage capacity shall be as follows:

2.1.1	4 ft (1219 mm) Diameter OGS Units:	1.19 m^3 sediment / 265 L oil
	5 ft (1524 mm) Diameter OGS Units:	1.95 m^3 sediment / 420 L oil
	6 ft (1829 mm) Diameter OGS Units:	3.48 m^3 sediment / 609 L oil
	8 ft (2438 mm) Diameter OGS Units:	8.78 m^3 sediment / 1,071 L oil
	10 ft (3048 mm) Diameter OGS Units:	17.78 m^3 sediment / 1,673 L oil
	12 ft (3657 mm) Diameter OGS Units:	31.23 m^3 sediment / 2,476 L oil

PART 3 – PERFORMANCE & DESIGN

3.1 GENERAL

The OGS stormwater quality treatment device shall be verified in accordance with ISO 14034:2016 Environmental management – Environmental technology verification (ETV). The OGS stormwater quality treatment device shall remove oil, sediment and gross pollutants from stormwater runoff during frequent wet weather events, and retain these pollutants during less frequent high flow wet weather events below the insert within the OGS for later removal during maintenance. The Manufacturer shall have at least ten (10) years of local experience, history and success in engineering design, manufacturing and production and supply of OGS stormwater quality treatment device systems, acceptable to the Engineer of Record.

3.2 SIZING METHODOLOGY

The OGS device shall be engineered, designed and sized to provide stormwater quality treatment based on treating a minimum of 90 percent of the average annual runoff volume and a minimum removal of an annual average 60% of the sediment (TSS) load based on the Particle Size Distribution (PSD) specified in the sizing report for the specified device. Sizing of the OGS shall be determined by use of a minimum ten (10) years of local historical rainfall data provided by Environment Canada. Sizing shall also be determined by use of the sediment removal performance data derived from the ISO 14034 ETV third-party verified laboratory testing data from testing conducted in accordance with the Canadian ETV protocol Procedure for Laboratory Testing of Oil-Grit Separators, as follows:

3.2.1 Sediment removal efficiency for a given surface loading rate and its associated flow rate shall be based on sediment removal efficiency demonstrated at the seven (7) tested surface loading rates specified in the protocol, ranging 40 L/min/m^2 to 1400 L/min/m^2, and as stated in the ISO 14034 ETV Verification Statement for the OGS device.

3.2.2 Sediment removal efficiency for surface loading rates between 40 L/min/m^2 and 1400 L/min/m^2 shall be based on linear interpolation of data between consecutive tested surface loading rates.

3.2.3 Sediment removal efficiency for surface loading rates less than the lowest tested surface loading rate of 40 L/min/m^2 shall be assumed to be identical to the sediment removal efficiency at 40 L/min/m^2. No extrapolation shall be allowed that results in a sediment removal efficiency that is greater than that demonstrated at 40 L/min/m^2.

3.2.4 Sediment removal efficiency for surface loading rates greater than the highest tested surface loading rate of 1400 L/min/m^2 shall assume zero sediment removal for the portion of flow that exceeds 1400 L/min/m^2, and shall be calculated using a simple proportioning formula, with 1400 L/min/m^2 in the numerator and the higher surface loading rate in the denominator, and multiplying the resulting fraction times the sediment removal efficiency at 1400 L/min/m^2.

The OGS device shall also have sufficient annual sediment storage capacity as specified and calculated in Section 2.1.

3.3 CANADIAN ETV or ISO 14034 ETV VERIFICATION OF SCOUR TESTING

The OGS device shall have Canadian ETV or ISO 14034 ETV Verification of third-party scour testing conducted in accordance with the Canadian ETV Program's **Procedure for Laboratory Testing of Oil-Grit Separators.**

3.3.1 To be acceptable for on-line installation, the OGS device must demonstrate an average scour test effluent concentration less than 10 mg/L at each surface loading rate tested, up to and including 2600 L/min/m^2.

3.4 LIGHT LIQUID RE-ENTRAINMENT SIMULATION TESTING

The OGS device shall have Canadian ETV or ISO 14034 ETV Verification of completed third-party Light Liquid Re-entrainment Simulation Testing in accordance with the Canadian ETV **Program's Procedure for Laboratory Testing of Oil-Grit Separators,** with results reported within the Canadian ETV or ISO 14034 ETV verification. This re-

entrainment testing is conducted with the device pre-loaded with low density polyethylene (LDPE) plastic beads as a surrogate for light liquids such as oil and fuel. Testing is conducted on the same OGS unit tested for sediment removal to assess whether light liquids captured after a spill are effectively retained at high flow rates.

3.4.1 For an OGS device to be an acceptable stormwater treatment device on a site where vehicular traffic occurs and the potential for an oil or fuel spill exists, the OGS device must have reported verified performance results of greater than 99% cumulative retention of LDPE plastic beads for the five specified surface loading rates (ranging 200 L/min/m^2 to 2600 L/min/m^2) in accordance with the Light Liquid Re-entrainment Simulation Testing within the Canadian ETV Program's **Procedure for Laboratory Testing of Oil-Grit Separators.** However, an OGS device shall not be allowed if the Light Liquid Re-entrainment Simulation Testing was performed with screening components within the OGS device that are effective at retaining the LDPE plastic beads, but would not be expected to retain light liquids such as oil and fuel.

Stormceptor®

Stormceptor® EF Sizing Report

Rinker MATERIALS™

Imbrium® Systems
ESTIMATED NET ANNUAL SEDIMENT (TSS) LOAD REDUCTION

04/08/2026

Province:	Ontario
City:	Ottawa
Nearest Rainfall Station:	OTTAWA CDA RCS
Climate Station Id:	6105978
Years of Rainfall Data:	20

Project Name:	301 Somme
Project Number:	70465
Designer Name:	Dustin Thiffault
Designer Company:	Stantec Consulting Ltd.
Designer Email:	dustin.thiffault@stantec.com
Designer Phone:	613-724-4420
EOR Name:	
EOR Company:	
EOR Email:	
EOR Phone:	

Site Name:	STM 106
Drainage Area (ha):	1.67
Runoff Coefficient 'c':	0.71
Particle Size Distribution:	CA ETV
Target TSS Removal (%):	50.0
Required Water Quality Runoff Volume Capture (%):	90.00
Estimated Water Quality Flow Rate (L/s):	38.27
Oil / Fuel Spill Risk Site?	Yes
Upstream Flow Control?	No
Peak Conveyance (maximum) Flow Rate (L/s):	
Influent TSS Concentration (mg/L):	200
Estimated Average Annual Sediment Load (kg/yr):	776
Estimated Average Annual Sediment Volume (L/yr):	631

Net Annual Sediment (TSS) Load Reduction Sizing Summary

Stormceptor Model	TSS Removal Provided (%)
EFO4	45
EFO5	50
EFO6	54
EFO8	59
EFO10	63
EFO12	65

Recommended Stormceptor EFO Model:	**EFO5**
Estimated Net Annual Sediment (TSS) Load Reduction (%):	**50**
Water Quality Runoff Volume Capture (%):	**> 90**

imbrium

THIRD-PARTY TESTING AND VERIFICATION

►**Stormceptor® EF and Stormceptor® EFO** are the latest evolutions in the Stormceptor® oil-grit separator (OGS) technology series, and are designed to remove a wide variety of pollutants from stormwater and snowmelt runoff. These technologies have been third-party tested in accordance with the Canadian ETV **Procedure for Laboratory Testing of Oil-Grit Separators** and performance has been third-party verified in accordance with the **ISO 14034 Environmental Technology Verification (ETV)** protocol.

PERFORMANCE

►**Stormceptor® EF and EFO** remove stormwater pollutants through gravity separation and floatation, and feature a patent-pending design that generates positive removal of total suspended solids (TSS) throughout each storm event, including high-intensity storms. Captured pollutants include sediment, free oils, and sediment-bound pollutants such as nutrients, heavy metals, and petroleum hydrocarbons. Stormceptor is sized to remove a high level of TSS from the frequent rainfall events that contribute the vast majority of annual runoff volume and pollutant load. The technology incorporates an internal bypass to convey excessive stormwater flows from high-intensity storms through the device without resuspension and washout (scour) of previously captured pollutants. Proper routine maintenance ensures high pollutant removal performance and protection of downstream waterwavs.

PARTICLE SIZE DISTRIBUTION (PSD)

►The **Canadian ETV PSD** shown in the table below was used, or in part, for this sizing. This is the identical PSD that is referenced in the Canadian ETV ***Procedure for Laboratory Testing of Oil-Grit Separators*** for both sediment removal testing and scour testing. The Canadian ETV PSD contains a wide range of particle sizes in the sand and silt fractions, and is considered reasonably representative of the particle size fractions found in typical urban stormwater runoff.

Particle Size (μm)	Percent Less Than	Particle Size Fraction (μm)	Percent
1000	100	500-1000	5
500	95	250-500	5
250	90	150-250	15
150	75	100-150	15
100	60	75-100	10
75	50	50-75	5
50	45	20-50	10
20	35	8-20	15
8	20	5-8	10
5	10	2-5	5
2	5	<2	5

Rainfall Intensity (mm / hr)	Percent Rainfall Volume (%)	Cumulative Rainfall Volume (%)	Flow Rate (L/s)	Flow Rate (L/min)	Surface Loading Rate (L/min/m²)	Removal Efficiency (%)	Incremental Removal (%)	Cumulative Removal (%)
0.50	8.6	8.6	1.65	99.0	54.0	69	5.9	5.9
1.00	20.3	29.0	3.30	198.0	109.0	62	12.7	18.6
2.00	16.2	45.2	6.59	396.0	217.0	54	8.7	27.3
3.00	12.0	57.2	9.89	593.0	326.0	50	6.0	33.4
4.00	8.4	65.6	13.18	791.0	435.0	47	4.0	37.3
5.00	5.9	71.6	16.48	989.0	543.0	44	2.6	39.9
6.00	4.6	76.2	19.78	1187.0	652.0	42	1.9	41.9
7.00	3.1	79.3	23.07	1384.0	761.0	41	1.3	43.1
8.00	2.7	82.0	26.37	1582.0	869.0	41	1.1	44.3
9.00	3.3	85.3	29.67	1780.0	978.0	40	1.3	45.6
10.00	2.3	87.6	32.96	1978.0	1087.0	39	0.9	46.5
11.00	1.6	89.2	36.26	2176.0	1195.0	37	0.6	47.1
12.00	1.3	90.5	39.55	2373.0	1304.0	36	0.5	47.5
13.00	1.7	92.2	42.85	2571.0	1413.0	34	0.6	48.1
14.00	1.2	93.5	46.15	2769.0	1521.0	31	0.4	48.5
15.00	1.2	94.6	49.44	2967.0	1630.0	29	0.3	48.8
16.00	0.7	95.3	52.74	3164.0	1739.0	28	0.2	49.0
17.00	0.7	96.1	56.04	3362.0	1847.0	26	0.2	49.2
18.00	0.4	96.5	59.33	3560.0	1956.0	24	0.1	49.3
19.00	0.4	96.9	62.63	3758.0	2065.0	23	0.1	49.4
20.00	0.2	97.1	65.92	3955.0	2173.0	22	0.0	49.5
21.00	0.5	97.5	69.22	4153.0	2282.0	21	0.1	49.6
22.00	0.2	97.8	72.52	4351.0	2391.0	20	0.0	49.6
23.00	1.0	98.8	75.81	4549.0	2499.0	19	0.2	49.8
24.00	0.3	99.1	79.11	4747.0	2608.0	18	0.0	49.8
25.00	0.0	99.1	82.41	4944.0	2717.0	18	0.0	49.8
30.00	0.9	100.0	98.89	5933.0	3260.0	15	0.1	50.0
35.00	0.0	100.0	115.37	6922.0	3803.0	13	0.0	50.0
40.00	0.0	100.0	131.85	7911.0	4347.0	11	0.0	50.0
45.00	0.0	100.0	148.33	8900.0	4890.0	10	0.0	50.0
Estimated Net Annual Sediment (TSS) Load Reduction =								**50 %**

Climate Station ID: 6105978 *Years of Rainfall Data*: 20

RAINFALL DATA FROM OTTAWA CDA RCS RAINFALL STATION

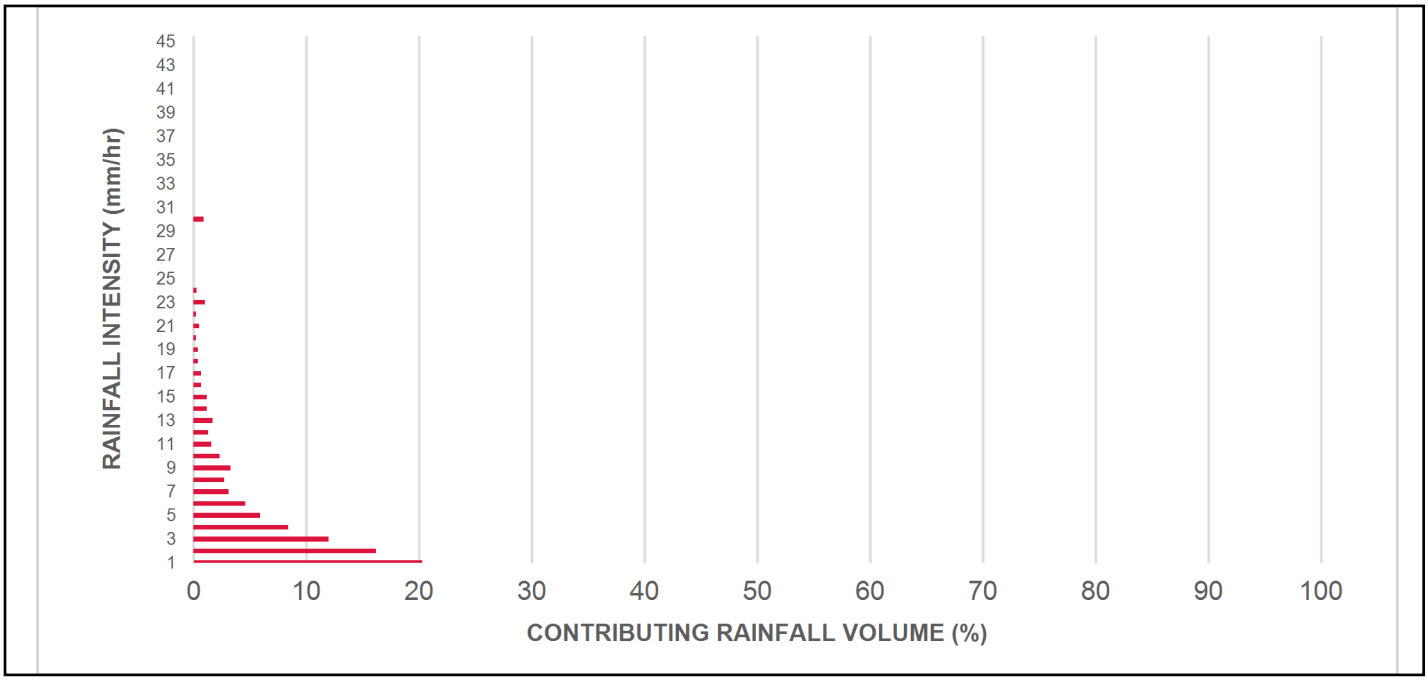

INCREMENTAL AND CUMULATIVE TSS REMOVAL FOR THE RECOMMENDED STORMCEPTOR® MODEL

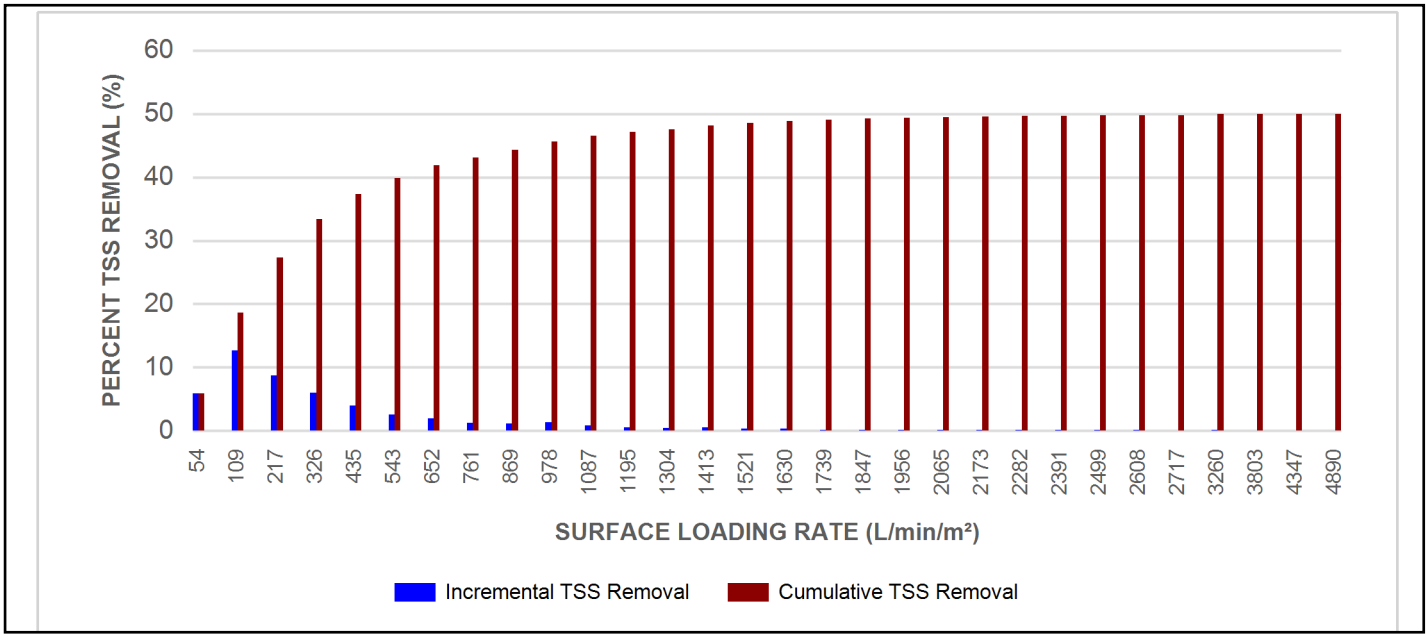

Maximum Pipe Diameter / Peak Conveyance

Stormceptor EF / EFO	Model Diameter		Min Angle Inlet / Outlet Pipes	Max Inlet Pipe Diameter		Max Outlet Pipe Diameter		Peak Conveyance Flow Rate	
	(m)	(ft)		(mm)	(in)	(mm)	(in)	(L/s)	(cfs)
EF4 / EFO4	1.2	4	90	609	24	609	24	425	15
EF5 / EFO5	1.5	5	90	762	30	762	30	710	25
EF6 / EFO6	1.8	6	90	914	36	914	36	990	35
EF8 / EFO8	2.4	8	90	1219	48	1219	48	1700	60
EF10 / EFO10	3.0	10	90	1828	72	1828	72	2830	100
EF12 / EFO12	3.6	12	90	1828	72	1828	72	2830	100

SCOUR PREVENTION AND ONLINE CONFIGURATION

►**Stormceptor® EF and EFO** feature an internal bypass and superior scour prevention technology that have been demonstrated in third-party testing according to the scour testing provisions of the Canadian ETV **Procedure for Laboratory Testing of Oil-Grit Separators**, and the exceptional scour test performance has been third-party verified in accordance with the ISO 14034 ETV protocol. As a result, Stormceptor EF and EFO are approved for online installation, eliminating the need for costly additional bypass structures, piping, and installation expense.

DESIGN FLEXIBILITY

►**Stormceptor® EF** and **EFO** offers design flexibility in one simplified platform, accepting stormwater flow from a single inlet pipe or multiple inlet pipes, and/or surface runoff through an inlet grate. The device can also serve as a junction structure, accommodate a 90-degree inlet-to-outlet bend angle, and can be modified to ensure performance in submerged conditions.

OIL CAPTURE AND RETENTION

►While Stormceptor® EF will capture and retain oil from dry weather spills and low intensity runoff, **Stormceptor® EFO** has demonstrated superior oil capture and greater than 99% oil retention in third-party testing according to the light liquid re-entrainment testing provisions of the Canadian ETV **Procedure for Laboratory Testing of Oil-Grit Separators**. Stormceptor EFO is recommended for sites where oil capture and retention is a requirement.

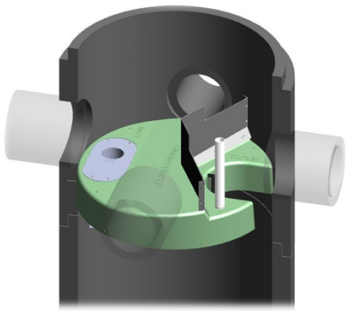

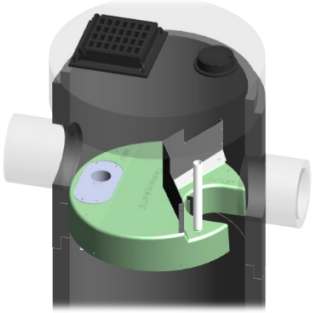

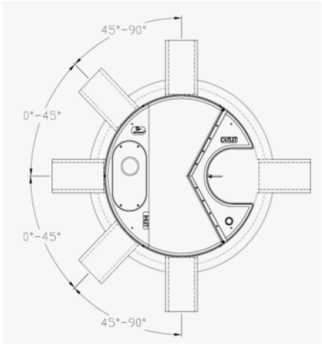

INLET-TO-OUTLET DROP

Elevation differential between inlet and outlet pipe inverts is dictated by the angle at which the inlet pipe(s) enters the unit.

0° - 45° : The inlet pipe is 1-inch (25mm) higher than the outlet pipe.

45° - 90° : The inlet pipe is 2-inches (50mm) higher than the outlet pipe.

HEAD LOSS

The head loss through Stormceptor EF is similar to that of a 60-degree bend structure. The applicable K value for calculating minor losses through the unit is 1.1. For submerged conditions the applicable K value is 3.0.

Pollutant Capacity

Stormceptor EF / EFO	Model Diameter		Depth (Outlet Pipe Invert to Sump Floor)		Oil Volume		Recommended Sediment Maintenance Depth *		Maximum Sediment Volume *		Maximum Sediment Mass **	
	(m)	(ft)	(m)	(ft)	(L)	(Gal)	(mm)	(in)	(L)	(ft^3)	(kg)	(lb)
EF4 / EFO4	1.2	4	1.52	5.0	265	70	203	8	1190	42	1904	5250
EF5 / EFO5	1.5	5	1.62	5.3	420	111	305	10	2124	75	2612	5758
EF6 / EFO6	1.8	6	1.93	6.3	610	160	305	12	3470	123	5552	15375
EF8 / EFO8	2.4	8	2.59	8.5	1070	280	610	24	8780	310	14048	38750
EF10 / EFO10	3.0	10	3.25	10.7	1670	440	610	24	17790	628	28464	78500
EF12 / EFO12	3.6	12	3.89	12.8	2475	655	610	24	31220	1103	49952	137875

*Increased sump depth may be added to increase sediment storage capacity

** Average density of wet packed sediment in sump = 1.6 kg/L (100 lb/ft^3)

Feature	Benefit	Feature Appeals To
Patent-pending enhanced flow treatment and scour prevention technology	Superior, verified third-party performance	Regulator, Specifying & Design Engineer
Third-party verified light liquid capture and retention for EFO version	Proven performance for fuel/oil hotspot locations	Regulator, Specifying & Design Engineer, Site Owner
Functions as bend, junction or inlet structure	Design flexibility	Specifying & Design Engineer
Minimal drop between inlet and outlet	Site installation ease	Contractor
Large diameter outlet riser for inspection and maintenance	Easy maintenance access from grade	Maintenance Contractor & Site Owner

STANDARD STORMCEPTOR EF/EFO DRAWINGS

For standard details, please visit http://www.imbriumsystems.com/stormwater-treatment-solutions/stormceptor-ef

STANDARD STORMCEPTOR EF/EFO SPECIFICATION

For specifications, please visit http://www.imbriumsystems.com/stormwater-treatment-solutions/stormceptor-ef

Table of TSS Removal vs Surface Loading Rate Based on Third-Party Test Results
Stormceptor® EFO

SLR (L/min/m²)	TSS % REMOVAL	SLR (L/min/m²)	TSS % REMOVAL	SLR (L/min/m²)	TSS % REMOVAL	SLR (L/min/m²)	TSS % REMOVAL
1	70	660	42	1320	35	1980	24
30	70	690	42	1350	35	2010	24
60	67	720	41	1380	34	2040	23
90	63	750	41	1410	34	2070	23
120	61	780	41	1440	33	2100	23
150	58	810	41	1470	32	2130	22
180	56	840	41	1500	32	2160	22
210	54	870	41	1530	31	2190	22
240	53	900	41	1560	31	2220	21
270	52	930	40	1590	30	2250	21
300	51	960	40	1620	29	2280	21
330	50	990	40	1650	29	2310	21
360	49	1020	40	1680	28	2340	20
390	48	1050	39	1710	28	2370	20
420	47	1080	39	1740	27	2400	20
450	47	1110	38	1770	27	2430	20
480	46	1140	38	1800	26	2460	19
510	45	1170	37	1830	26	2490	19
540	44	1200	37	1860	26	2520	19
570	43	1230	37	1890	25	2550	19
600	42	1260	36	1920	25	2580	18
630	42	1290	36	1950	24	2600	26

STANDARD PERFORMANCE SPECIFICATION FOR "OIL GRIT SEPARATOR" (OGS) STORMWATER QUALITY TREAMENT DEVICE

PART 1 – GENERAL

1.1 WORK INCLUDED

This section specifies requirements for selecting, sizing, and designing an underground Oil Grit Separator (OGS) device for stormwater quality treatment, with third-party testing results and a Statement of Verification in accordance with ISO 14034 Environmental Management – Environmental Technology Verification (ETV).

1.2 REFERENCE STANDARDS & PROCEDURES

ISO 14034:2016 Environmental management – Environmental technology verification (ETV)

Canadian Environmental Technology Verification (ETV) Program's **Procedure for Laboratory Testing of Oil-Grit Separators**

1.3 SUBMITTALS

1.3.1 All submittals, including sizing reports & shop drawings, shall be submitted upon request with each order to the contractor then forwarded to the Engineer of Record for review and acceptance. Shop drawings shall detail all OGS components, elevations, and sequence of construction.

1.3.2 Alternative devices shall have features identical to or greater than the specified device, including: treatment chamber diameter, treatment chamber wet volume, sediment storage volume, and oil storage volume.

1.3.3 Unless directed otherwise by the Engineer of Record, OGS stormwater quality treatment product substitutions or alternatives submitted within ten days prior to project bid shall not be accepted. All alternatives or substitutions submitted shall be signed and sealed by a local registered Professional Engineer, based on the exact same criteria detailed in Section 3, in entirety, subject to review and approval by the Engineer of Record.

PART 2 – PRODUCTS

2.1 OGS POLLUTANT STORAGE

The OGS device shall include a sump for sediment storage, and a protected volume for the capture and storage of petroleum hydrocarbons and buoyant gross pollutants. The minimum sediment & petroleum hydrocarbon storage capacity shall be as follows:

2.1.1	4 ft (1219 mm) Diameter OGS Units:	1.19 m^3 sediment / 265 L oil
	5 ft (1524 mm) Diameter OGS Units:	1.95 m^3 sediment / 420 L oil
	6 ft (1829 mm) Diameter OGS Units:	3.48 m^3 sediment / 609 L oil
	8 ft (2438 mm) Diameter OGS Units:	8.78 m^3 sediment / 1,071 L oil
	10 ft (3048 mm) Diameter OGS Units:	17.78 m^3 sediment / 1,673 L oil
	12 ft (3657 mm) Diameter OGS Units:	31.23 m^3 sediment / 2,476 L oil

PART 3 – PERFORMANCE & DESIGN

3.1 GENERAL

The OGS stormwater quality treatment device shall be verified in accordance with ISO 14034:2016 Environmental management – Environmental technology verification (ETV). The OGS stormwater quality treatment device shall remove oil, sediment and gross pollutants from stormwater runoff during frequent wet weather events, and retain these pollutants during less frequent high flow wet weather events below the insert within the OGS for later removal during maintenance. The Manufacturer shall have at least ten (10) years of local experience, history and success in engineering design, manufacturing and production and supply of OGS stormwater quality treatment device systems, acceptable to the Engineer of Record.

3.2 SIZING METHODOLOGY

The OGS device shall be engineered, designed and sized to provide stormwater quality treatment based on treating a minimum of 90 percent of the average annual runoff volume and a minimum removal of an annual average 60% of the sediment (TSS) load based on the Particle Size Distribution (PSD) specified in the sizing report for the specified device. Sizing of the OGS shall be determined by use of a minimum ten (10) years of local historical rainfall data provided by Environment Canada. Sizing shall also be determined by use of the sediment removal performance data derived from the ISO 14034 ETV third-party verified laboratory testing data from testing conducted in accordance with the Canadian ETV protocol Procedure for Laboratory Testing of Oil-Grit Separators, as follows:

3.2.1 Sediment removal efficiency for a given surface loading rate and its associated flow rate shall be based on sediment removal efficiency demonstrated at the seven (7) tested surface loading rates specified in the protocol, ranging 40 L/min/m^2 to 1400 L/min/m^2, and as stated in the ISO 14034 ETV Verification Statement for the OGS device.

3.2.2 Sediment removal efficiency for surface loading rates between 40 L/min/m^2 and 1400 L/min/m^2 shall be based on linear interpolation of data between consecutive tested surface loading rates.

3.2.3 Sediment removal efficiency for surface loading rates less than the lowest tested surface loading rate of 40 L/min/m^2 shall be assumed to be identical to the sediment removal efficiency at 40 L/min/m^2. No extrapolation shall be allowed that results in a sediment removal efficiency that is greater than that demonstrated at 40 L/min/m^2.

3.2.4 Sediment removal efficiency for surface loading rates greater than the highest tested surface loading rate of 1400 L/min/m^2 shall assume zero sediment removal for the portion of flow that exceeds 1400 L/min/m^2, and shall be calculated using a simple proportioning formula, with 1400 L/min/m^2 in the numerator and the higher surface loading rate in the denominator, and multiplying the resulting fraction times the sediment removal efficiency at 1400 L/min/m^2.

The OGS device shall also have sufficient annual sediment storage capacity as specified and calculated in Section 2.1.

3.3 CANADIAN ETV or ISO 14034 ETV VERIFICATION OF SCOUR TESTING

The OGS device shall have Canadian ETV or ISO 14034 ETV Verification of third-party scour testing conducted in accordance with the Canadian ETV Program's **Procedure for Laboratory Testing of Oil-Grit Separators.**

3.3.1 To be acceptable for on-line installation, the OGS device must demonstrate an average scour test effluent concentration less than 10 mg/L at each surface loading rate tested, up to and including 2600 L/min/m^2.

3.4 LIGHT LIQUID RE-ENTRAINMENT SIMULATION TESTING

The OGS device shall have Canadian ETV or ISO 14034 ETV Verification of completed third-party Light Liquid Re-entrainment Simulation Testing in accordance with the Canadian ETV **Program's Procedure for Laboratory Testing of Oil-Grit Separators,** with results reported within the Canadian ETV or ISO 14034 ETV verification. This re-

entrainment testing is conducted with the device pre-loaded with low density polyethylene (LDPE) plastic beads as a surrogate for light liquids such as oil and fuel. Testing is conducted on the same OGS unit tested for sediment removal to assess whether light liquids captured after a spill are effectively retained at high flow rates.

3.4.1 For an OGS device to be an acceptable stormwater treatment device on a site where vehicular traffic occurs and the potential for an oil or fuel spill exists, the OGS device must have reported verified performance results of greater than 99% cumulative retention of LDPE plastic beads for the five specified surface loading rates (ranging 200 L/min/m^2 to 2600 L/min/m^2) in accordance with the Light Liquid Re-entrainment Simulation Testing within the Canadian ETV Program's **Procedure for Laboratory Testing of Oil-Grit Separators.** However, an OGS device shall not be allowed if the Light Liquid Re-entrainment Simulation Testing was performed with screening components within the OGS device that are effective at retaining the LDPE plastic beads, but would not be expected to retain light liquids such as oil and fuel.

Appendix C External Report Excerpts

This Stormwater Management Report (SWMR) has been written to demonstrate that the subject land could be developed in compliance with the above surface water criteria and also prepared in accordance with the SWMPDM. The proposed stormwater management strategy for the HIP was developed to meet a "normal" level of protection, which corresponds to a standard approach used in land development to obtain a targeted TSS removal rate of 70%.

3.0 STORM SERVICING

3.1 General

Peak flow estimation is an important task that is carried out for any proposed development. There are several reasons that explain why flood flow rates are computed as part of site development. The main purpose of these calculations, however, is to allow for the proper configuration and sizing of the proposed conveyance systems to minimize the risk of flooding.

Drainage works are designed for a real or hypothetical storm event that may or may not happen during the lifetime of the facilities. At the onset of the design process, design criteria are adopted that may vary with the type of project, in recognition of the impacts of failure. For this particular project, the level of protection adopted (storm events up to a 1:100 year recurrence) was based on design storm characteristics of an infrequent storm event having a low probability to occur.

3.2 Description of Conveyance Systems and Design Basis

Flowing water can be conveyed to an outlet by either open-channel flow or pipe flow. Storm runoff generated by the subject lands is to be collected and conveyed by a roadside ditch/culvert system before discharging to Findlay Creek via an end-of-pipe stormwater management facility (SWMF).

Sizing of the conveyance systems was carried out using various levels of service. The open ditch system was sized with sufficient capacity to convey, under free-flowing conditions, storm runoff up to the 1:100 year recurrence, while roadway culverts were sized to provide conveyance of the 1:10 year peak flow rates without overtopping the roadway embankments.

As part of this sizing exercise, Storm Drainage Area Plans were prepared and included in this Report (refer to Drawing D-ST1 for the HIP and Drawing D-ST2 for Hawthorne and Rideau Road) that show the delineated area for each of the conveyance segments (i.e., from node location to node location), along with its assigned runoff coefficient (C-factor) based on the type of surface. Since the final development of Hawthorne Industrial Park is unknown at this time, a conservative on-site runoff coefficient (C-factor) of 0.70 was used. Table 2 illustrates the breakdown of a typical site that would generate a weighted runoff coefficient of 0.70.

Table 2 - Typical Potential Land Use Breakdown

Type of Surface	Area (%)	C-Factor
Building	10	1.0
Asphalt Parking	35	0.90
Gravel	35	0.70
Grass	20	0.20
Overall	100	**0.70**

It should be noted that the C-factors shown on the Storm Drainage Area Plans denote those associated with 1:10 year peak flow calculations. As recommended in Section 5.4.5.2.1 of the City of Ottawa's Sewer Design Guidelines, C-factors shown on drawings were increased by 10% and 25% for the 1:25 year and 1:100 year peak flow calculations, respectively (refer to Appendix 'A' for copies of the Rational Method Design Sheets).

3.2.1 Open Ditch System

An open ditch channel is a conduit used to convey flowing water from one location to another, with a free surface. A channel can be classified as either artificial (i.e., manmade) or natural. Artificial channels are those constructed or developed as a result of human activity. This type of conveyance system is usually implemented as a long and mild-sloped channel built in the ground, which provides conveyance of water between two points, with sections of regular geometry and shape. An open ditch system is generally designed to follow site topography and the vertical profile of the adjacent roadway. The most commonly used shapes for open channel ditches are trapezoidal and triangular, with the latter shape utilized mainly for ditches servicing small drainage areas.

The open ditches associated with the HIP and Hawthorne Road were sized with sufficient capacity to convey 1:100 year peak flow rates. As previously noted, the Rational Method Design Sheets (refer to Appendix 'A' for copy of the 1:100 year design sheet) were used to quantify the 1:100 year peak flow rates. The open ditch configuration was carried out utilizing Manning's relationship, along with the proposed geometry and slope of the channel. Two Storm Drainage Area Plans were prepared (refer to Drawings D-ST1 and D-ST2) showing proposed ditch inverts that match those shown on the Rational Method Design Sheets. Based on the ditch sizing exercise, it was determined that triangular shape ditches with 3:1 side slopes and variable depths provided the necessary conveyance of the 1:100 year peak flow rate. The Site Servicing and Grading Plan (refer to Drawing SG) was developed to provide the configuration of open ditch segments.

The existing open ditches along Rideau Road were also evaluated to ensure sufficient capacity was able to convey the 1:100 year peak flow rates resulting from upstream construction works (i.e., construction of Hawthorne Road). The Rational Method Design Sheets (refer to Appendix 'A' for copy of the 1:100 year design sheet) were used to quantify the 1:100 year peak flow rates. An existing 900 mm diameter culvert crossing under Hawthorne Road conveys flow along the north side of Rideau Road (refer to Drawing D-ST2). The capacity of this existing culvert was estimated at 1,400 L/s under a 1.5 m headwater (refer to Appendix 'B' for Culvert Design Summary Table). Upon the review of existing topography, any headwater depths greater than 1.5 m resulted in runoff being directed northerly along Hawthorne Road towards Findlay Creek. In light of the above, the existing open ditches along Rideau Road were evaluated using a conservative plug flow of 1,400 L/s in addition to surface runoff generated by the contributing areas.

3.2.2 Culvert System

The principal function of a culvert is to convey water through an embankment while, at the same time, supporting the weight of the overlying fill and vehicular movement. Culverts can be made of many different materials; steel, polyvinylchloride (PVC), high density polyethylene (HDPE) and concrete. Culverts selected for the HIP and Hawthorne Road are made of corrugated steel, in either round or arch shape. Field observations have shown that there are two major types of culvert flow conditions: inlet control and outlet control.

1. Flow Under Inlet Control

Flow with inlet control means that the discharge capacity of a culvert is controlled at the culvert entrance by the depth of headwater and by the entrance geometry, including the barrel shape, cross sectional area and the type of inlet edge. The roughness and length of the culvert barrel, and the outlet conditions are not factors in determining the culvert capacity. The longitudinal slope reduces headwater only to a small degree and can normally be neglected for conventional culverts flowing in inlet control.

2. Flow Under Outlet Control

Flow with outlet control means that the discharge capacity of a culvert is controlled by the depth of tailwater, including the velocity head within the barrel, the entrance and friction losses. The roughness, length of the culvert barrel, and slope are factors in determining the culvert capacity; the inlet geometry is of lesser importance.

To avoid having to conduct detailed hydraulic computations that would determine the type of flow under which a culvert will probably operate, the procedure recommended by the MTO (refer to MTO's Drainage Management Manual) was utilized. This methodology, referred to as the Conventional Culvert Design procedure, requires that MTO's Design Charts and Design Nomographs be used for both inlet and outlet control conditions. The higher headwater depth that is calculated from those two operating conditions would indicate the type of control and would provide the governing headwater depth. This methodology was utilized to size each culvert crossing, along with the 1:10 year peak flow rates calculated by the Rational Method Design Sheets (refer to Appendix 'A') for each of the conveyance segments. Furthermore, this calculation sheet also provides proposed culvert sizes, along with the type of control and governing depth found when using the conventional culvert design procedure. A summary of the various parameters estimated using MTO's nomographs at each of the culverts has been tabulated using MTO's Form D4-I (refer to Appendix 'B' for Conventional Culvert Design Sheet). This analysis shows that the proposed culvert crossings within the HIP and along Hawthorne Road are capable of conveying the 1:10 year peak flow rates as a minimum, without overtopping any of the roadway embankments. The hydraulic calculations were carried out assuming a roughness coefficient of 0.024 for any of the CSP and CSPA culverts. The Site Servicing and Grading Plan (Drawing SG) shows proposed culvert sizes, lengths and invert elevations at each of the crossings.

The proposed 1030 x 740 mm CSPA culvert crossing under the entrance of the pond access road was of concern due to the high flow rate during the 1:100 year storm event.

There was a possibility that the excess flow overtopping this culvert could short circuit into SWMF via the pond access road. Therefore, an analysis of the flow overtopping the proposed entrance culvert was conducted and the results confirmed that the residual flow would indeed be contained within the right-of-way corridor (refer to Appendix 'J' for desktop calculation).

4.0 WATER BALANCE

Water balance analyses are typically carried out to assess any changes in infiltration to subsurface water-bearing zones as a result of the urbanization (i.e., increase of hard surfaces) of land. The SCSS has identified the need to maintain a necessary level of quantity and quality groundwater recharge via infiltration. Groundwater recharge is required to maintain subsurface base flow to streams and wetlands in addition to maintaining groundwater levels for private and municipal wells. The Hydrogeological Study completed by Golder Associates Limited in 2008 for the HIP identified the site as being underlain by a shallow and deep aquifer separated by an impermeable rock layer. The upper aquifer provided subsurface groundwater flow to streams, while the lower aquifer was the main source for well water supply. Therefore, groundwater recharge for this site was intended to provide subsurface base flow into the receiving Findlay Creek.

Construction fill operations have been active for the HIP since 1994. The results of the geotechnical field investigation conducted by Inspec-Sol Incorporated in 2008 indicates that as much as 5.5 m of fill material (MW7-08) has been placed on parts of the site. The non-native heterogenous fill material is comprised mainly of silty clay and contains trace amounts of road and construction materials. Although the soil component of the fill material exhibits the characteristics of silty clay, the varying composition and density of the remaining portion of the fill affects its permeability in localized areas. Given the above existing conditions, it is difficult to determine how groundwater recharge will behave as subsurface flow in the existing fill matrix, particularly from individual sites within the HIP. The MOE expressed concerns about the use of infiltration strategies on the individual sites given the past history as a construction fill site. Furthermore, the MOE SWMPDM does not endorse the use of infiltration basins on lands zoned for industrial use as there is an increased risk of groundwater contamination should a spill occur on site.

An option was considered to provide infiltration for the entire site at the base of the end-of-pipe Dry Pond facility. Upon further investigation, the geotechnical report indicated

that there was a high groundwater table at the proposed pond location. In addition, in-situ soils in the area exhibited poor drainage properties which would have resulted in long retention times at the base of the pond, making it difficult to meet the water balance deficit requirements for the entire site while attempting to mimic the pre-development hydrological cycle.

Representatives from the City and SNC were consulted, and it was concluded that the SCSS groundwater balance targets for this site would be difficult to meet. It was also recognized that on-site infiltration strategies for this industrial subdivision could have a detrimental effect on groundwater quality and jeopardize the natural ecological integrity of receiving waters. In light of the above, it was decided by the approval authorities that the requirement for the water balance would be waived for the HIP development.

5.0 WATER QUALITY

5.1 General

Urbanization has been found to modify the hydrological regime of a receiving stream if inadequate stormwater management measures are implemented. The potential impacts associated with runoff arise primarily from the amount of urban area that is impervious to rain and snowmelt water. These impervious surfaces increase the amount of direct surface runoff that is generated and is conveyed more efficiently to the receiving stream. As part of the SCSS, fisheries resources have been inventoried along this watercourse, along with its associated tributaries. Given that the receiving watercourses were found to shelter fisheries, the approved document recommended that a "normal" level of protection be achieved. To fulfil this requirement, it is proposed that each individual site provide an oil/grit separator and infiltration storage be provided within the roadside open ditch system, as per the requirements presented in the SWMPDM.

5.2 Water Quality Requirement

Stormwater servicing for the HIP has been developed in accordance with the water quality recommendations of the SCSS (70% TSS removal). To fulfil this requirement, individual sites will be required to provide an oil/grit separator be installed to provide quality treatment (i.e., 70% TSS removal) of surface runoff before entering the roadside open ditch/culvert system. In addition, the oil/grit separator will be able to capture and contain hydrocarbons in the event of an on-site accidental spill.

To fulfill the water quality objectives for the paved portion of the HIP internal roads, it is proposed to provide infiltration within the open roadside ditch system to meet the storage volume requirements presented in Table 3.2 of the SWMPDM. Based on the normal level of service required and an imperviousness of 100% for the internal roads, Table 3.2 yields an extrapolated storage volume requirement of 35 m^3/ha. To achieve this storage volume, a clear stone envelope complete with a 200 mm diameter perforated pipe will be installed at the base of the roadside ditches to meet the required storage volume (Refer to Appendix C for calculations).

The following table presents the calculated infiltration volume required for water quality control and those provided by the roadside open ditch system to meet the recommended MOE Design Guidelines.

Table 3 - Water Quality Infiltration Requirements

Phase	Area (ha)	Infiltration Volume Requirement (m^3)	Infiltration Method	Length of 200 mm diameter Perf. Pipe (m)	Infiltration Volume Provided (m^3)
1	1.58	55.1	Open Ditch	1760	55.3
2	0.21	7.4	Open Ditch	240	7.5
Total	1.79	62.5	Open Ditch	2000	62.8

As shown in the above Table, the infiltration volume provided by the proposed open roadside ditch network (62.8 m^3) exceeds that obtained from Table 3.2 (62.5 m^3) of the SWMPDM. It should be noted that additional storage within the void space of the clear stone envelope was not accounted for and would increase the actual infiltration storage volume shown in Table 3.

6.0 HYDROLOGICAL ANALYSIS

6.1 General

To satisfy the surface water objectives presented in Subsections 1.3 and 2.2, a hydrological analysis was carried out to quantify peak flow rate variations resulting from the development of the proposed HIP. To quantify this variation, the SWMHYMO Stormwater Management Hydrological Model (Version 4.02, July, 1999) was utilized to calculate peak flows during severe storm events.

To carry out the hydrological analysis, three storm drainage plans were developed; one representing the pre-development drainage conditions, one representing the post-development conditions for the current study area, Phase 1, and the other for the post-development drainage conditions, including future development, Phase 2. For each of these plans, subwatershed boundaries were delineated based on existing topography of the site and the proposed overland flow direction following development of the site (refer to Figures 2, 3 and 4 for details).

6.2 Synthetic Design Storm Simulation and Hydrological Parameters

Peak runoff rates were calculated for both pre- and post-development conditions using synthetic design storm event modelling. Peak flow rates were estimated using the 3-hour Chicago Design Storm Event, as this synthetic storm event has been recognized as the most critical event for urban runoff applications (refer to Section 5.4.3.1 of the City of Ottawa's Sewer Design Guidelines). The design storm analysis was completed using volumes derived from the Intensity-Duration-Frequency (IDF) curve equation shown in Section 5.4.2 of the City of Ottawa Sewer Design Guidelines compiled using data from 1967 to 1997.

A SWMHYMO data file was developed to represent both pre- and post-development conditions of the subject area. Simulation of surficial runoff generated from undeveloped subwatersheds was carried out using the "DESIGN NASHYD" command along with the SCS procedure to compute rainfall losses. The SCS procedure uses the Curve Number (CN) method to compute rainfall losses and the Nash unit hydrograph to simulate the hydrological response from undeveloped watersheds. To simulate surface runoff from urban subwatersheds, the "CALIB STANDHYD" command was utilized. Hydrological parameter selection and methodology is described below:

Curve Number (CN)

In order to estimate a Curve Number that represents pre-development conditions, the geotechnical investigation completed by Inspec-Sol, entitled "Geotechnical Study Subdivision Plan, Hawthorne Industrial Park, Lots 26 and 27 Concession 6, Southeast of Hawthorne and Rideau Roads, Ottawa, Ontario" dated December 19, 2008 was used. At the time of this investigation, large amounts of fill material were encountered over the majority of the site, which does not reflect the pre-development conditions. As such, only native soils encountered below fill material were used to establish pre-development condition Curve Numbers. The review of the geotechnical investigation shows native

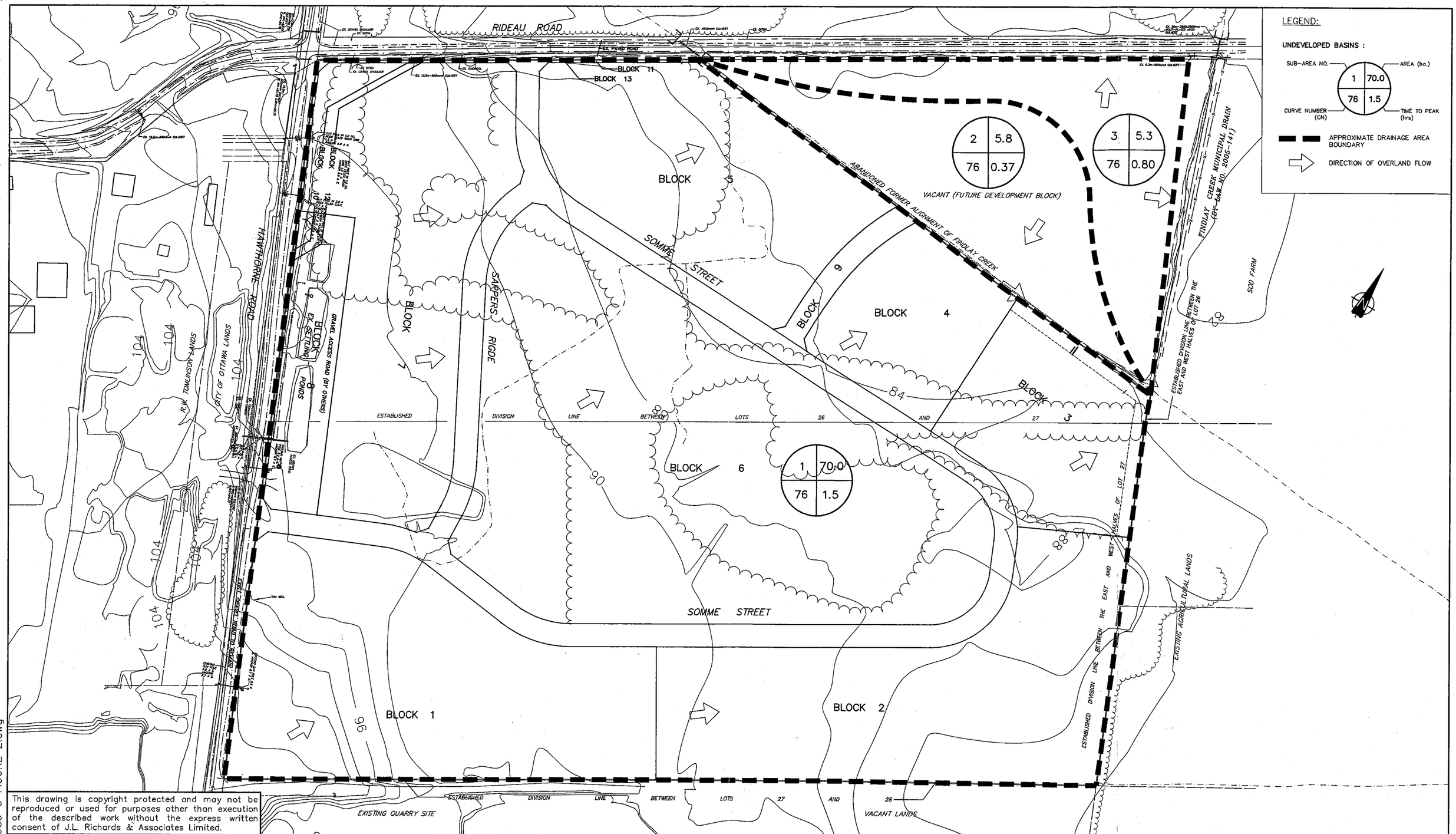

This drawing is copyright protected and may not be reproduced or used for purposes other than execution of the described work without the express written consent of J.L. Richards & Associates Limited.

PROJECT:
HAWTHORNE INDUSTRIAL PARK

DRAWING:
PRE-DEVELOPMENT STORM DRAINAGE AREA PLAN

J.L.Richards
ENGINEERS·ARCHITECTS·PLANNERS
J.L. Richards & Associates Limited
864 Lady Ellen Place
Ottawa, ON Canada
K1Z 5M2
Tel: 613 728 3571
Fax: 613 728 6012

DESIGN:	M.B.
DRAWN:	ARM
CHECKED:	G.F.
PLOTTED:	Apr 30, 2009

DRAWING NO.: FIGURE 2

JLR NO: 20983

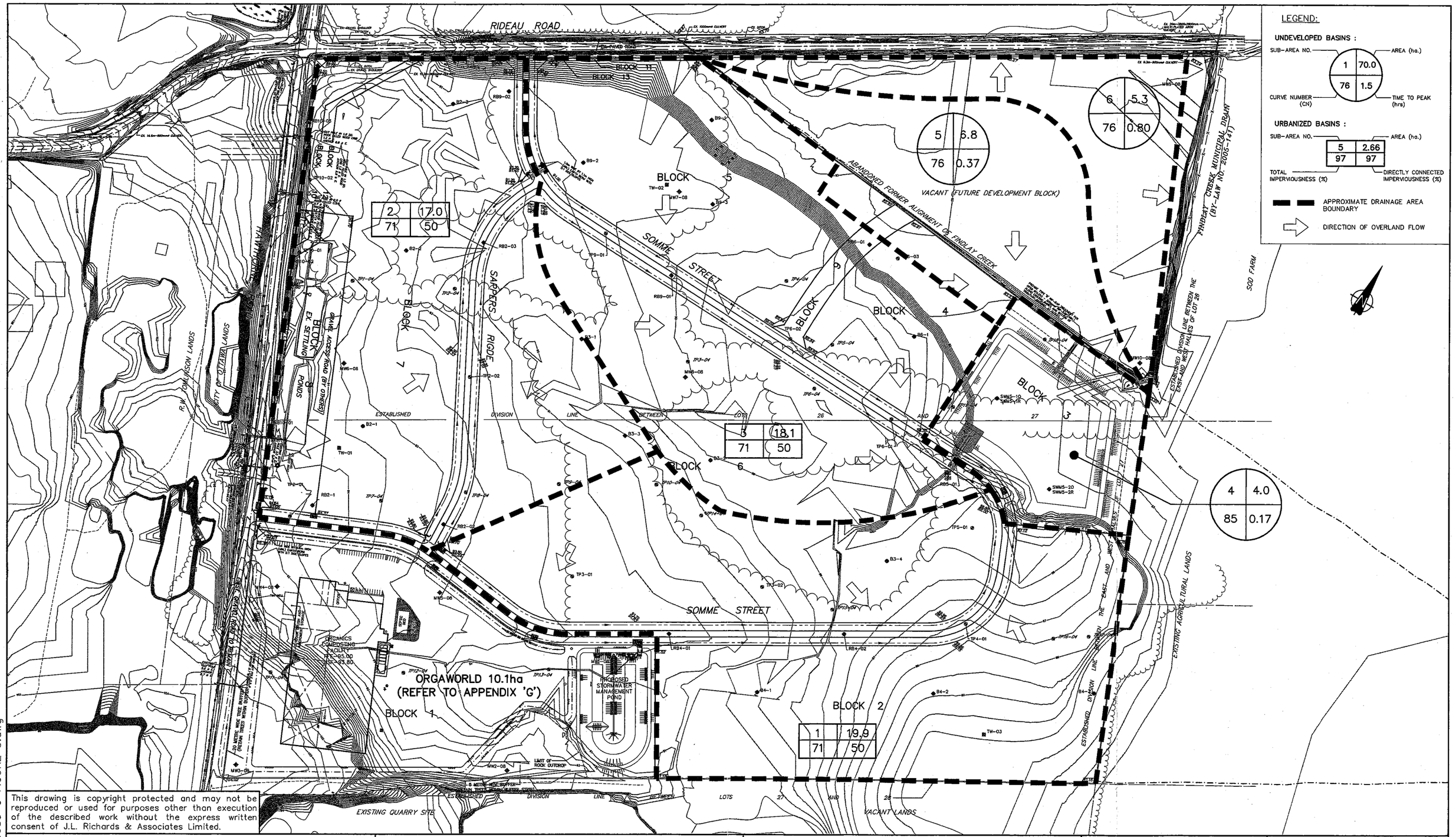

This drawing is copyright protected and may not be reproduced or used for purposes other than execution of the described work without the express written consent of J.L. Richards & Associates Limited.

PROJECT:
HAWTHORNE INDUSTRIAL PARK

DRAWING:
POST DEVELOPMENT – PHASE 1 STORM DRAINAGE AREA PLAN

J.L.Richards
ENGINEERS·ARCHITECTS·PLANNERS
J.L. Richards & Associates Limited
864 Lady Ellen Place
Ottawa, ON Canada
K1Z 5M2
Tel: 613 728 3571
Fax: 613 728 6012

DESIGN:	M.B.
DRAWN:	ARM
CHECKED:	G.F.
PLOTTED:	Apr 30, 2009

DRAWING NO.: FIGURE 3

JLR NO: 20983

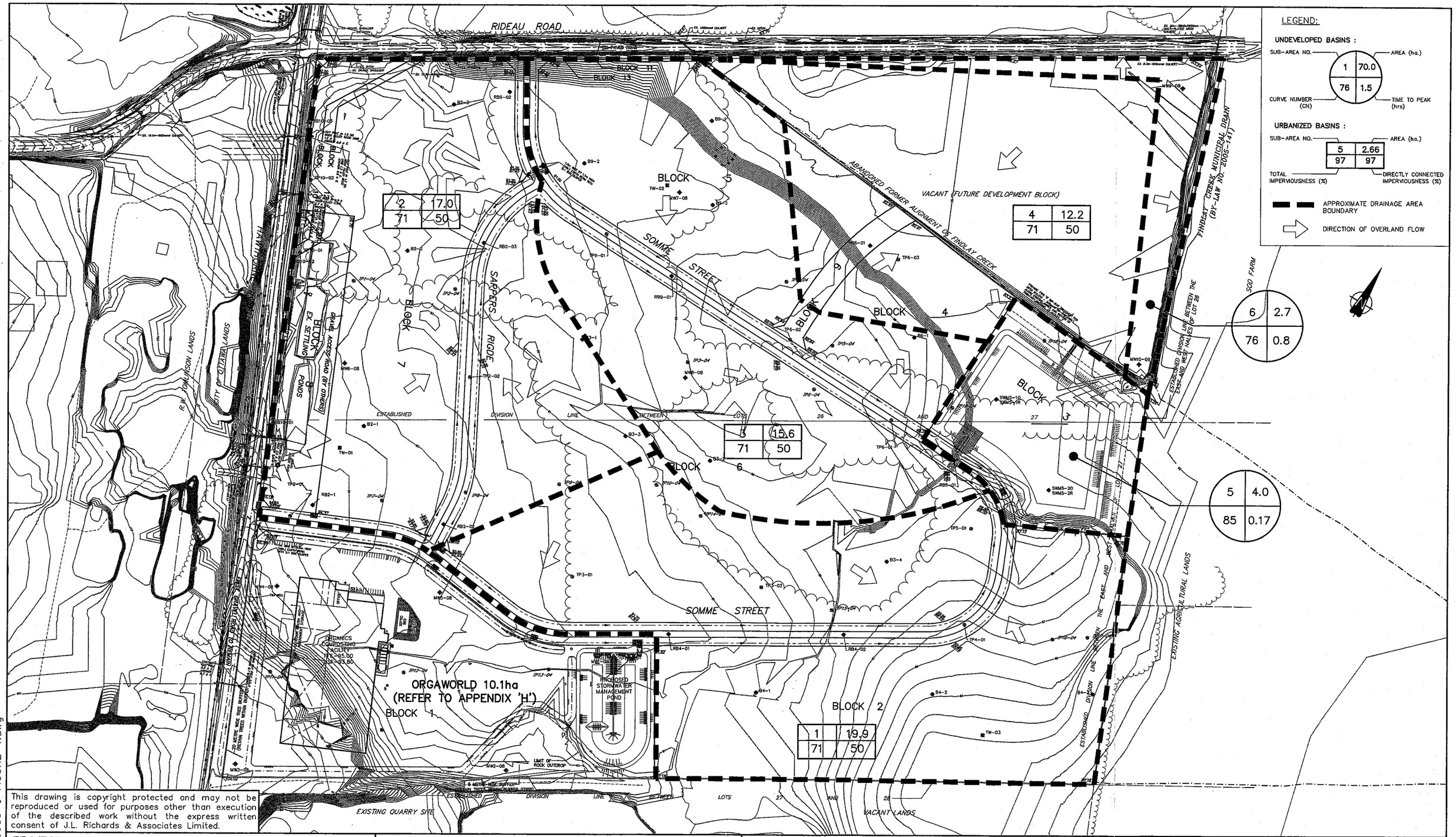

This drawing is copyright protected and may not be reproduced or used for purposes other than execution of the described work without the express written consent of J.L. Richards & Associates Limited.

PROJECT:
HAWTHORNE INDUSTRIAL PARK

DRAWING:
POST DEVELOPMENT – PHASE 2 STORM DRAINAGE AREA PLAN

J.L.Richards
ENGINEERS·ARCHITECTS·PLANNERS
J.L. Richards & Associates Limited
864 Lady Ellen Place
Ottawa, ON Canada
K1Z 5M2
Tel: 613 728 3571
Fax: 613 728 6012

DESIGN:	M.B.
DRAWN:	ARM
CHECKED:	G.F.
PLOTTED:	Apr 30, 2009

DRAWING NO.: FIGURE 4

JLR NO: 20983

v:\20983...\20983J FIGURE 4.dwg

soils ranging from silty sand in Blocks 4 and 5, to silty clay in Blocks 3, 5, 7 and 8, to sandstone and limestone in parts of Blocks 2 and 3. These soils have been classified by Inspec-Sol as being associated with hydrologic soil groups (HSG), ranging from "B" to "D" for silty sand to silty clay, respectively. Areas where rock was encountered (i.e., Sandstone and Limestone) were classified as "Rockland." Based on this information and current land usage, as interpreted from aerial photography, a pre-development Curve Number (CN) of 76 has been calculated using the Ministry of Transportation of Ontario (MTO) Chart H2-8. Detailed calculations for the HIP have been included in Appendix 'D'.

Under post-development conditions, it is proposed to provide sufficient grade differential to allow for positive drainage to meet City of Ottawa Design Standards. As the subject lands are to be developed as an Industrial Park with a significant increase in hard surfaces (i.e., buildings, asphalt and gravel), the post-development conditions were, therefore, analysed taking into consideration the low potential of these surfaces to infiltrate storm runoff.

Imperviousness

Surface runoff under post-development conditions is greatly impacted by the imperviousness of its tributary area. Since the final development of the HIP is unknown, a conservative assumption for typical surfaces encountered in similar industrial parks was developed, as illustrated in Table 2. To determine the imperviousness based on the assumed breakdown presented in Table 2, an imperviousness calculation was carried out and is presented in Appendix 'D'. The imperviousness calculation was based on the following assumptions:

- an imperviousness of 100% was assigned for building footprints;
- an imperviousness of 100% was assigned for all asphalt parking surfaces.
- an imperviousness of 70% was assigned for all gravel surfaces; and
- it was assumed that 50% of the total imperviousness (TIMP) 50 % was modelled as directly connected imperviousness (XIMP).

Based on the above, a total imperviousness of 70% was calculated, which is equivalent to a runoff coefficient of 0.7. The hydrological analysis was, therefore, carried out using

a total imperviousness of 70%, consistent with the runoff coefficient used for sizing the open ditch/culvert system.

Time to Peak (T_p)

Time to peak calculations were carried out under pre-development conditions. Time of concentration was first estimated using the Uplands Method Chart based on the various flow paths. Once calculated, the times to peak were set to 67% (i.e., 2/3) of the time of concentration (T_c). Under pre-development conditions, a 90 minute time to peak was calculated (refer to Appendix 'D' for calculations). When modelling post-development conditions, the "CALIB STANDHYD" command was used to calculate the time to peak associated with the proposed site surfaces and grades (refer to Appendix 'E' for SWMHYMO outputs).

6.3 Simulation of Pre- and Post-Development (Uncontrolled) Conditions

The hydrological analysis was carried over the entire HIP under both the pre- and post-development conditions. As stated in Section 6.1, two post-development conditions were investigated, namely, Phase 1 and Phase 2. Phase 1 evaluates servicing for the current Study area, while Phase 2 includes the current Study area along with servicing of an additional 11.2 ha of land to the north east, shown on drawings as "Future Development Block."

Peak flow rates were computed with SWMHYMO using the procedure and parameters described in Subsection 6.2. Table 4 presents the simulated peak runoff rates under a 3 hour Chicago design storm event for both the pre- and post- (uncontrolled) development conditions for the HIP (refer to Appendix 'E' for SWMHYMO data input and output files), along with those under a 4 hour - 25 mm storm.

Table 4 - SWMHYMO Simulation Results

Return Period or Storm Depth	Peak Flow Rates (L/s)		
	Pre-Development	Phase 1 Post-Development (Uncontrolled)	Phase 2 Post-Development (Uncontrolled)
25 mm	252	1,941	2,231
2	467	3,077	3,548
5	826	4,812	5,554
10	1,097	6,135	7,029
25	1,468	7,772	9,013
50	1,767	9,240	10,588
100	2,093	10,662	12,132

Simulation results presented in the above table show that uncontrolled post-development peak flows substantially exceed those obtained under pre-development conditions. Based on the design criterion for water quantity (refer to Subsections 1.3 and 2.2 for details), post-development peak flows should be maintained to their pre-development levels for storm events ranging from a 1:5 year to a 1:100 year recurrence. In addition, the 2-year post-development peak flow should be controlled to 50% of the 2-year pre-development peak flow to satisfy the erosion criterion. Water quantity control measures were, therefore, found to be necessary for the development of this site. Details and stormwater servicing approaches proposed to fulfil the design criteria listed in Subsections 1.3 and 2.2 are presented in the following Subsections.

6.4 Simulation of Phase 1 Post-Development (Controlled) Conditions

Development of the subject lands (i.e., 70 ha, as illustrated on Figure 3) will increase the imperviousness of the subject area. To achieve the surface water objectives listed in Subsections 1.3 and 2.2, it is proposed that an end-of-pipe facility be constructed that would provide storage volume for retention of runoff.

The stormwater management criteria for the development of the HIP consist of maintaining erosion potential and peak flow rates at the pre-development levels. Storm servicing of the Subdivision was, therefore, developed such that all of these requirements were fulfilled, along with the achievement of a "normal" protection level. It

is proposed to implement the following stormwater management servicing approach for the development of the HIP:

End-of-Pipe SWMF (Block 3)

Based on the proposed grading, the end-of-pipe facility was found to generate a volume of 37,240 m^3 (3.25 m depth). A low flow ditch sized for 2 year storm events was also included in the bottom of the end-of-pipe facility to convey flows to the outlet structure. The configuration of the outlet structure would be as follows:

- 1 x 150 mm diameter orifice within a 200 mm diameter Polyvinyl Chloride (PVC) pipe at elevation 82.90 m, which serves as outlet to the facility;
- 2 x 600 mm diameter Corrugated Steel Pipe culvert at elevation 84.80 m, which also serves as outlet to the facility;
- One (1) emergency overflow spillway (6.0 m wide) at elevation 86.15 m, which serves as outlet to the facility during a storm event greater than 1:100 year.

The above configuration was used to develop a Stage-Storage-Discharge relationship that relates the storativity and outlet capabilities of the proposed facility at various geodetic elevations (refer to Appendix 'F' for copy of this Table). This data (storage-discharge table) was then used as input to the SWMHYMO's ROUTE RESERVOIR command.

A SWMHYMO file, representing the post-development controlled conditions of the HIP, was developed incorporating the storage volume and the outflow capability of the proposed end-of-pipe facility. The following table presents the simulated peak runoff rates for the three (3) hour Chicago design storm under the post-development controlled conditions (refer to Appendix 'G' for SWMHYMO data input and output files), along with those under the four (4) hour - 25 mm storm.

Table 5 - SWMHYMO Simulation Results (Post-Development - Phase 1 Controlled Conditions)

Return Period or Storm Depth	Peak Flow Rates (L/s)	
	Pre-Development	Phase 1 Post-Development (Controlled)(1)
25 mm	252	127
2 year	467	194(2)
5 year	826	359
10 year	1,097	589
25 year	1,468	939
50 year	1,767	1,191
100 year	2,093	1,531

Note: (1) Post-development flow is the sum of flows from the end-of-pipe facility and two uncontrolled Sub-Areas totalling 12.1 ha.

(2) 2 year post-development peak flow less than half the 2-year pre-development peak flow (233 L/s).

Simulation results presented in Table 5 show that the Phase 1 post-development controlled peak flows will be maintained below pre-development levels for the HIP. Consequently, the water quantity objective defined in Subsections 1.3 and 2.2 will be met under Phase 1.

6.5 Simulation of Phase 2 Post-Development (Controlled) Conditions

Development of Phase 2, as depicted on Figure 4, includes the Future Development Block located in the northeast corner of the HIP. This additional land could be serviced by the previously proposed end-of-pipe, without any modifications to facility size or outlet structure. However, a second inlet would be required in the northeast corner of the facility, which could be designed during the detailed design stage of the Future Development Block.

A SWMHYMO file, representing the Phase 2 post-development controlled conditions of the HIP, was developed incorporating the storage volume and the outflow capability of the proposed end-of-pipe facility. The following table presents the simulated peak runoff rates for the three (3) hour Chicago design storm under the Phase 2 post-development

controlled conditions (refer to Appendix 'H' for SWMHYMO data input and output files), along with those under the four (4) hour - 25 mm storm.

Table 6 - SWMHYMO Simulation Results (Post-Development - Phase 2 Controlled Conditions)

Return Period or Storm Depth	Peak Flow Rates (L/s)	
	Pre-Development	Phase 2 Post-Development (Controlled)(1)
25 mm	252	73
2 year	467	156(2)
5 year	826	457
10 year	1,097	729
25 year	1,468	1,051
50 year	1,767	1,348
100 year	2,093	1,515

Note: (1) Post-development flow is the sum of flows from the end-of-pipe facility and one uncontrolled Sub-Area totalling 2.7 ha.

(2) 2-year post-development peak flow less than half the 2 year pre-development peak flow (233 L/s).

Simulation results presented in Table 6 show that the Phase 2 post-development controlled peak flows will be maintained below pre-development levels for the HIP. Consequently, the water quantity objective defined in Subsections 1.3 and 2.2 will also be met under Phase 2.

6.6 Simulation of the July 1, 1979 Historical Storm Event and Flood Potential

6.6.1 Simulation of the July 1, 1979 Historical Storm Event

In addition to designing the major drainage system to convey the 1:100 year storm event, the performance of both the open ditch system and SWMF was also assessed under the July 1, 1979 historical storm event. This historical storm event is defined as a high volume / low intensity storm event (when compared to the 1:100 year event) which

occurred mostly over a three hour period (refer to Table 5.6 in the Ottawa Sewer Design Guidelines). As shown in Table 5.6, the maximum intensity of 106.7 mm/hr only occurred for a 10 minute period (i.e, between the 85 to 95 minute time interval). The 1:100 year storm event intensities used to size the open ditch system were found to exceed the highest intensity of 106.7 mm/hr (refer to Appendix 'A' for 1:100 year Rational Method Sheet) with the exception of the most downstream ditch section (i.e., from Node 19 to Pond) where an intensity of 101.69 mm/hr was rather utilized. If an intensity of 106.7 mm/hr was used, the overall peak flow would increase from 12,814 L/s to 13,430 L/s substantially less than the free-flowing capacity of 52,735 L/s for the proposed ditch configuration. Consequently, the proposed open ditch system has the ability to convey flows generated by the July 1, 1979 storm event.

To supplement the above open ditch analysis, a hydrological analysis was also conducted to assess the performance of the SWMF under the July 1, 1979 storm event. A SWMHYMO file was, therefore, developed for the controlled Phase 2 post-development conditions of the HIP. Simulation results show that the Phase 2 post-development runoff during the July 1, 1979 storm event will be contained within the SWMF with all three of the outlet culverts flowing full in addition to approximately 210 mm of flow depth over the emergency overflow channel (refer to Appendix 'K' for SWMHYMO data input and output files). Therefore, the outlet of the SWMF has sufficient capacity to convey the July 1, 1979 historical storm event via the designated overland flow route without overtopping the banks.

6.6.2 Flood Potential

Draft approval Condition 12 of the draft subdivision conditions by the former Region of Ottawa-Carleton requires that "The owner shall complete a study indicating the extent of potential flooding on the property from Findlay Creek. The study including all models and assumptions shall be to the satisfaction of the South Nation River Conservation Authority." This condition was included as part of the original February 10, 1998 draft conditions (Gloucester File: S-RU-94-03).

Many changes have occurred on-site and adjacent to the site since Condition 12 was included in the draft approval for this site. Improvements to the roadside ditch were made along Rideau Road, immediately adjacent to the site. Surface runoff generated by the lands north of Rideau Road and conveyed to the small tributary located within the HIP site has now been re-directed toward the northeast corner of the site where the existing 3.8 m wide x 2.8 m high multi plate arch culvert crosses Rideau Road. A

municipal drainage report was prepared by Stantec Consulting in 2004 for this section of Findlay Creek which assessed the overall geomorphological conditions and provided recommendations for future maintenance. In addition, the SCSS conducted a flood hazard analysis. The 100 year flows from the Stantec model were plotted along the creeks modelled. Floodlines were shown in Figure 6.2.3 of the report. No floodlines were indicated for the section of Findlay Creek adjacent to the HIP site.

As indicated previously in the Section 4 of this Report, as much as 5.5 m of construction fill has been added to the site since 1994. The placed fill material on the site has eliminated the natural low lying areas and raised the site grade approximately 4.5 m above the top of creek bank. The current site grades will be maintained as a minimum for the development of the HIP subdivision. Therefore, we have no concerns about flooding on the property from Findlay Creek given the above changes to the site and improvements to the adjacent drainage network. Consequently, Condition 12 of the draft approval should be considered as being satisfied on the basis that this condition is out of date based on the current site conditions.

7.0 EROSION AND SEDIMENT CONTROL MEASURES DURING CONSTRUCTION

During construction of the roadway, the collection systems (i.e., ditches, culverts, sewers, etc.) and end-of-pipe facility, appropriate erosion and sediment control measures, as outlined in MNR's "Guidelines on Erosion and Sediment Control for Urban Construction Sites," will be implemented to trap sediment on site. To ensure proper implementation, the proposed measures have been incorporated onto Drawing ESC (Drawing entitled "Erosion and Sedimentation Control Plan"). The measures shown on this Drawing were developed based on topography and site constraints. As a minimum, the following measures will be implemented during construction:

- Supply and installation of straw bale flow check dams (as per OPSD 219.180) at the upstream end of each culvert. Proposed locations of straw bale barriers are indicated on Drawing ESC.

- Supply and installation of topsoil and hydroseed along the entire open ditch system once grading has been completed for a section. Mulching will be carried out immediately after hydroseeding. This will allow for immediate bank stabilization of the system and will prevent sediment ladden from occurring from exposed ditch surfaces.

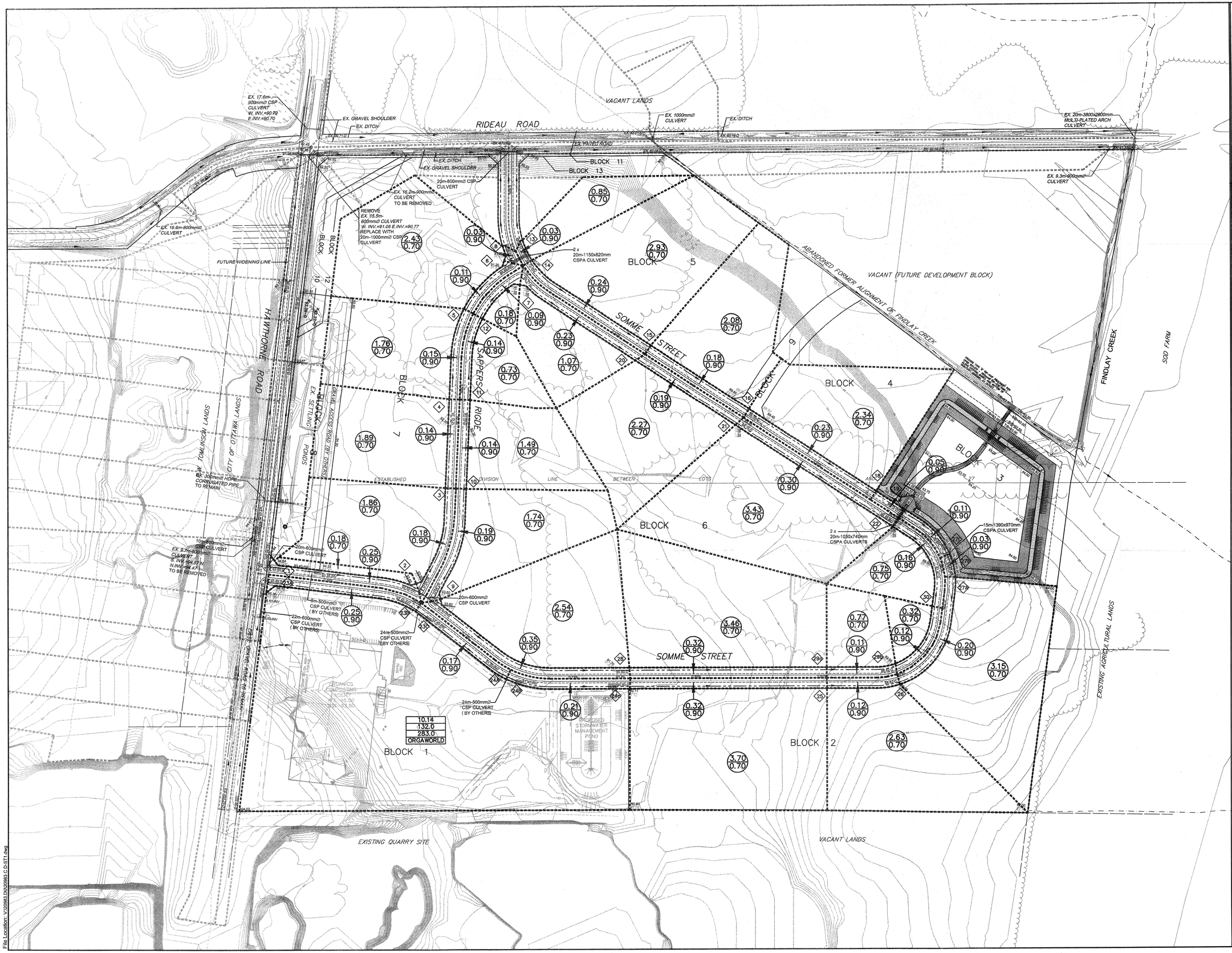

Key Map

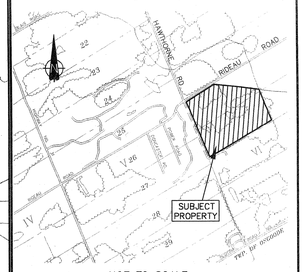

NOT TO SCALE

LEGEND

- - - - -	DRAINAGE BOUNDARY
2.91 / 0.70	AREA IN HECTARES / * RUNOFF COEFFICIENT (C)
10.14	DRAINAGE AREA (ha)
132.0	10 YEAR PEAK FLOW (l/s)
283.0	100 YEAR PEAK FLOW (l/s)
ORGAWORLD	ORGAWORLD SITE
28	NODE LOCATION NUMBER
←- - -	PROPOSED DITCH AND FLOW DIRECTION

* NOTE: RUNOFF COEFFICIENT (C) FOR DEVELOPMENT AREA IS BASED ON A WEIGHTED AVERAGE OF 0.70, WHILE ROADWAYS ARE 0.90.

NO.	ISSUE	DATE
03	ISSUED FOR M.O.E. APPROVAL	28/05/09
02	REVISED PER CITY COMMENTS	30/04/09
01	ISSUED FOR CITY APPROVAL	12/02/09

This drawing is copyright protected and may not be reproduced or used for purposes other than execution of the described work without the express written consent of J.L. Richards & Associates Limited.

SCALE: 1:2000

0 25 50 100 150

J.L.Richards
ENGINEERS·ARCHITECTS·PLANNERS

J.L. Richards & Associates Limited
203-863 Princess Street
Kingston, ON Canada
K7L 5N4
Tel: 613 544 1424
Fax: 613 544 5679

PROFESSIONAL STAMP

LICENSED PROFESSIONAL ENGINEER
D. P. UPTON
PROVINCE OF ONTARIO

PROJECT NORTH

PROJECT:

HAWTHORNE INDUSTRIAL PARK

DRAWING:

STORM DRAINAGE AREA PLAN

DESIGN: M.B.	DRAWING NO.: D-ST1
DRAWN: T.S.	
CHECKED: D.U.	JLR NO: 20983
PLOTTED: May 28, 2009	

File Location: V:\20983 DU\20983 C D-ST1.dwg

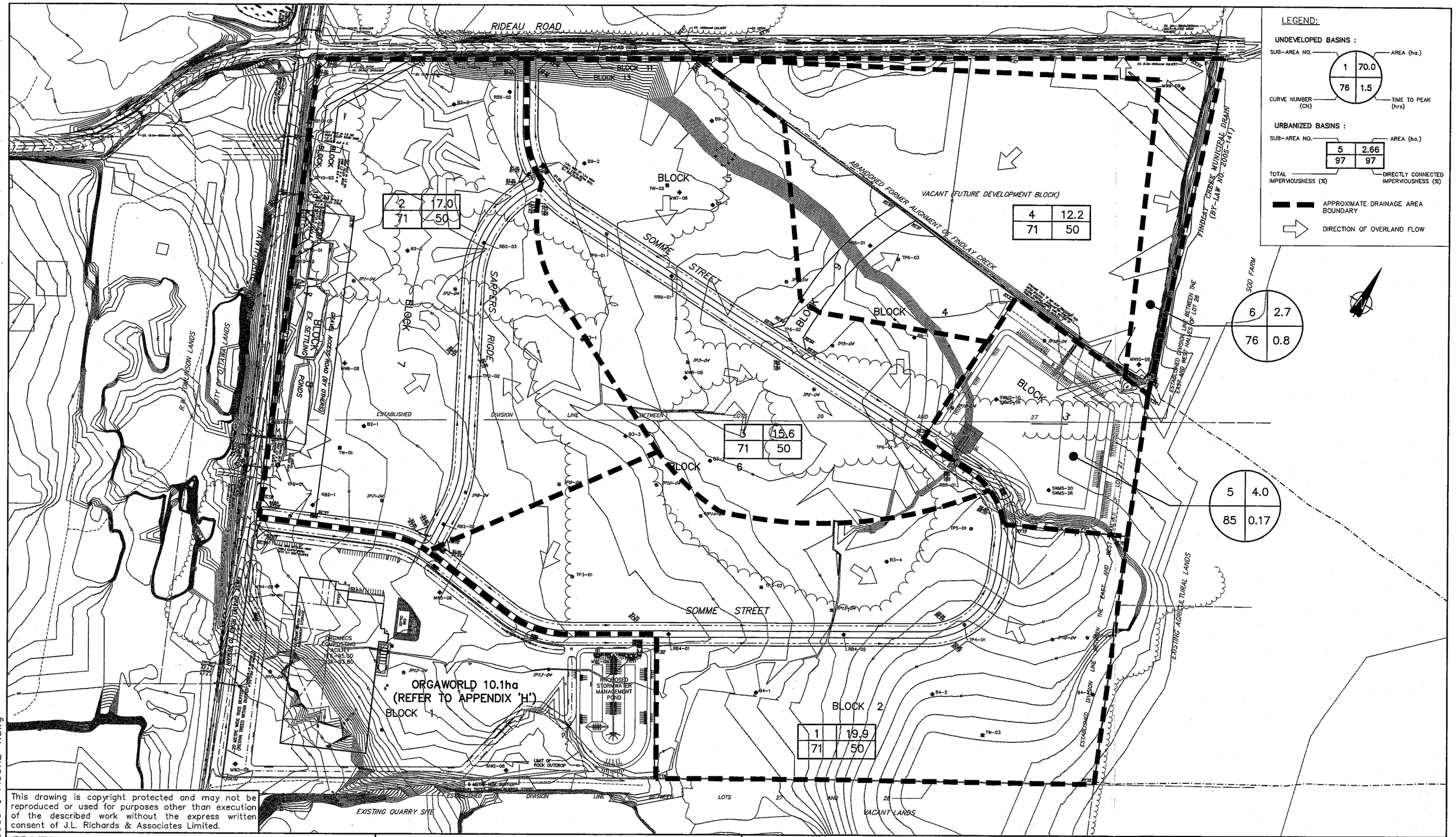

This drawing is copyright protected and may not be reproduced or used for purposes other than execution of the described work without the express written consent of J.L. Richards & Associates Limited.

PROJECT:
HAWTHORNE INDUSTRIAL PARK

DRAWING:
POST DEVELOPMENT – PHASE 2 STORM DRAINAGE AREA PLAN

J.L.Richards
ENGINEERS·ARCHITECTS·PLANNERS
J.L. Richards & Associates Limited
864 Lady Ellen Place
Ottawa, ON Canada
K1Z 5M2
Tel: 613 728 3571
Fax: 613 728 6012

DESIGN:	M.B.
DRAWN:	ARM
CHECKED:	G.F.
PLOTTED:	Apr 30, 2009

DRAWING NO.: FIGURE 4

JLR NO: 20983

v:\20983...\20983J FIGURE 4.dwg

There was a possibility that the excess flow overtopping this culvert could short circuit into SWMF via the pond access road. Therefore, an analysis of the flow overtopping the proposed entrance culvert was conducted and the results confirmed that the residual flow would indeed be contained within the right-of-way corridor (refer to Appendix 'J' for desktop calculation).

4.0 WATER BALANCE

Water balance analyses are typically carried out to assess any changes in infiltration to subsurface water-bearing zones as a result of the urbanization (i.e., increase of hard surfaces) of land. The SCSS has identified the need to maintain a necessary level of quantity and quality groundwater recharge via infiltration. Groundwater recharge is required to maintain subsurface base flow to streams and wetlands in addition to maintaining groundwater levels for private and municipal wells. The Hydrogeological Study completed by Golder Associates Limited in 2008 for the HIP identified the site as being underlain by a shallow and deep aquifer separated by an impermeable rock layer. The upper aquifer provided subsurface groundwater flow to streams, while the lower aquifer was the main source for well water supply. Therefore, groundwater recharge for this site was intended to provide subsurface base flow into the receiving Findlay Creek.

Construction fill operations have been active for the HIP since 1994. The results of the geotechnical field investigation conducted by Inspec-Sol Incorporated in 2008 indicates that as much as 5.5 m of fill material (MW7-08) has been placed on parts of the site. The non-native heterogenous fill material is comprised mainly of silty clay and contains trace amounts of road and construction materials. Although the soil component of the fill material exhibits the characteristics of silty clay, the varying composition and density of the remaining portion of the fill affects its permeability in localized areas. Given the above existing conditions, it is difficult to determine how groundwater recharge will behave as subsurface flow in the existing fill matrix, particularly from individual sites within the HIP. The MOE expressed concerns about the use of infiltration strategies on the individual sites given the past history as a construction fill site. Furthermore, the MOE SWMPDM does not endorse the use of infiltration basins on lands zoned for industrial use as there is an increased risk of groundwater contamination should a spill occur on site.

An option was considered to provide infiltration for the entire site at the base of the end-of-pipe Dry Pond facility. Upon further investigation, the geotechnical report indicated

that there was a high groundwater table at the proposed pond location. In addition, in-situ soils in the area exhibited poor drainage properties which would have resulted in long retention times at the base of the pond, making it difficult to meet the water balance deficit requirements for the entire site while attempting to mimic the pre-development hydrological cycle.

Representatives from the City and SNC were consulted, and it was concluded that the SCSS groundwater balance targets for this site would be difficult to meet. It was also recognized that on-site infiltration strategies for this industrial subdivision could have a detrimental effect on groundwater quality and jeopardize the natural ecological integrity of receiving waters. In light of the above, it was decided by the approval authorities that the requirement for the water balance would be waived for the HIP development.

5.0 WATER QUALITY

5.1 General

Urbanization has been found to modify the hydrological regime of a receiving stream if inadequate stormwater management measures are implemented. The potential impacts associated with runoff arise primarily from the amount of urban area that is impervious to rain and snowmelt water. These impervious surfaces increase the amount of direct surface runoff that is generated and is conveyed more efficiently to the receiving stream. As part of the SCSS, fisheries resources have been inventoried along this watercourse, along with its associated tributaries. Given that the receiving watercourses were found to shelter fisheries, the approved document recommended that a "normal" level of protection be achieved. To fulfil this requirement, it is proposed that each individual site provide an oil/grit separator and infiltration storage be provided within the roadside open ditch system, as per the requirements presented in the SWMPDM.

5.2 Water Quality Requirement

Stormwater servicing for the HIP has been developed in accordance with the water quality recommendations of the SCSS (70% TSS removal). To fulfil this requirement, individual sites will be required to provide an oil/grit separator be installed to provide quality treatment (i.e., 70% TSS removal) of surface runoff before entering the roadside open ditch/culvert system. In addition, the oil/grit separator will be able to capture and contain hydrocarbons in the event of an on-site accidental spill.

APPENDIX 'H'

SWMHYMO INPUT AND OUTPUT FILES
(Post-Development Controlled Phase 2 Conditions)

```
00001> 2     Metric units
00002> *#*****************************************************************************
00003> *#  Project Name : Hawthorne Industrial Park        Project Number:    [20983] *
00004> *#  Date         : January, 2009                                                *
00005> *#  Revised      : N/A                                                          *
00006> *#  Developed by : Mark Buchanan, E.I.T.                                        *
00007> *#  Reviewed by  : Guy Forget, P.Eng.                                           *
00008> *#  Company      : J.L. Richards & Associates Limited                           *
00009> *#  License #    : 4418403                                                      *
00010> *#*****************************************************************************
00011> *
00012> *
00013> *#*************************************************************
00014> *#  FILENAME:  V:\20983.DU\ENG\SWMHYMO\20983PST.DAT          *
00015> *#  FILE DEVELOPED FOR SITE PLAN APPLICATION AND DETAILED DESIGN *
00016> *#   OF A FACILITY ASSOCIATED WITH THE OTTAWA COMPOSTING SITE    *
00017> *#*************************************************************
00018> *
00019> ******************************************************************************
00020> *        SWMHYMO FILE DEVELOPED TO INVESTIGATE FLOOD FLOWS OF THE            *
00021> *   PROPOSED COMPOSTING SITE UNDER POST-DEVELOPMENT UNCONTROLLED CONDITIONS  *
00022> ******************************************************************************
00023>
00024> ***********************************************************
00025> * HYDROLOGICAL ANALYSIS UNDER A 4 HR-25 MM STORM AND  *
00026> * FOR DESIGN STORMS OF 1:2, 5, 10, 25, 50, AND 100 YR *
00027> ***********************************************************
00028>
00029> ***************************************************************
00030> *          POST-DEVELOPMENT UNCONTROLLED CONDITIONS           *
00031> ***************************************************************
00032>
00033> ***************************************************************
00034> *           CALCULATION OF 4 HR 25 MM STORM EVENT             *
00035> ***************************************************************
00036>
00037> START                 TZERO=[0.0],  METOUT=[2],  NSTORM=[0],  NRUN=[0]
00038> *%                     [  ] <--storm filename, one per line for NSTORM time
00039> READ STORM             STORM_FILENAME=["4HR25-15.STM"]
00040> *%-----------------|-------------------------------------------------------|
00041> DEFAULT VALUES        ICASEdef=[1],  read and print values
00042>                       DEFVAL_FILENAME=[V:\22973.DU\ENG\SWMHYMO\"ORGA.VAL"]
00043> *%-----------------|-------------------------------------------------------|
00044>
00045> ************************************
00046> *           ORGAWORLD FILE         *
00047> ************************************
00048> *
00049> * SUB-AREA No.1
00050>
00051> CALIB STANDHYD        ID=[ 1  ], NHYD=["010"], DT=[2.5](min), AREA=[ 2.07 ](ha),
00052>                       XIMP=[0.84], TIMP=[0.84], DWF=[0.0](cms), LOSS=[2],
00053>                       SCS curve number CN=[81],
00054>                       Pervious   surfaces: IAper=[4.67](mm), SLPP=[1.0](%),
00055>                                            LGP=[20](m), MNP=[ 0.25 ], SCP=[0.0](mi
00056>                       Impervious surfaces: IAimp=[1.57](mm), SLPI=[0.52](%),
00057>                                            LGI=[204.72](m), MNI=[0.03 ], SCI=[0.0]
00058>                       RAINFALL=[ ,  ,  ,  , ](mm/hr) ,  END=-1
00059> *%-----------------|-------------------------------------------------------|
00060> *
00061> * SUB-AREA No.2
00062>
00063> CALIB STANDHYD        ID=[ 2  ], NHYD=["020"], DT=[2.5](min), AREA=[ 1.54 ](ha),
00064>                       XIMP=[0.92], TIMP=[0.92], DWF=[0.0](cms), LOSS=[2],
00065>                       SCS curve number CN=[81],
00066>                       Pervious   surfaces: IAper=[4.67](mm), SLPP=[1.0](%),
00067>                                            LGP=[5](m), MNP=[0.03], SCP=[0.0](min),
00068>                       Impervious surfaces: IAimp=[1.57](mm), SLPI=[0.50](%),
00069>                                            LGI=[244.34](m), MNI=[0.03 ], SCI=[0.0]
00070>                       RAINFALL=[ ,  ,  ,  , ](mm/hr) ,  END=-1
00071> *%-----------------|-------------------------------------------------------|
00072> *
00073> * SUB-AREA No.3
00074>
00075> CALIB STANDHYD        ID=[ 3 ], NHYD=["030"], DT=[2.5](min), AREA=[1.4](ha),
00076>                       XIMP=[0.97], TIMP=[0.97], DWF=[0.0](cms), LOSS=[2],
00077>                       SCS curve number CN=[81],
00078>                       Pervious   surfaces: IAper=[4.67](mm), SLPP=[1.0](%),
00079>                                            LGP=[5](m), MNP=[0.03], SCP=[0.0](min),
00080>                       Impervious surfaces: IAimp=[1.57](mm), SLPI=[ 0.51 ](%),
00081>                                            LGI=[ 225.63 ](m), MNI=[0.03], SCI=[0.0
00082>                       RAINFALL=[ ,  ,  ,  , ](mm/hr) ,  END=-1
00083> *%-----------------|-------------------------------------------------------|
00084> ADD HYD               IDsum=[4], NHYD=[ "040"], IDs to add=[1+2]
00085> *%-----------------|-------------------------------------------------------|
00086> ADD HYD               IDsum=[5], NHYD=[ "050"], IDs to add=[3+4]
00087> *%-----------------|-------------------------------------------------------|
00088> *
00089> * SUB-AREA No.4
00090>
00091> CALIB STANDHYD        ID=[6], NHYD=["060"], DT=[2.5](min), AREA=[0.89](ha),
00092>                       XIMP=[0.97], TIMP=[0.97], DWF=[0.0](cms), LOSS=[2],
00093>                       SCS curve number CN=[81],
00094>                       Pervious   surfaces: IAper=[4.67](mm), SLPP=[0.7](%),
00095>                                            LGP=[40](m), MNP=[0.25], SCP=[0.0](min)
00096>                       Impervious surfaces: IAimp=[1.57](mm), SLPI=[0.93](%),
00097>                                            LGI=[164.82](m), MNI=[0.03], SCI=[0.0](
00098>                       RAINFALL=[ ,  ,  ,  , ](mm/hr) ,  END=-1
00099> *%-----------------|-------------------------------------------------------|
00100> *
00101> * SUB-AREA No.5
00102>
00103> CALIB STANDHYD        ID=[ 7  ], NHYD=["070"], DT=[2.5](min), AREA=[2.66](ha),
00104>                       XIMP=[0.97], TIMP=[0.97], DWF=[0.0](cms), LOSS=[2],
00105>                       SCS curve number CN=[81],
00106>                       Pervious   surfaces: IAper=[4.67](mm), SLPP=[1.5](%),
00107>                                            LGP=[20.0](m), MNP=[0.25], SCP=[0.0](mi
00108>                       Impervious surfaces: IAimp=[1.57](mm), SLPI=[0.61](%),
00109>                                            LGI=[207.25](m), MNI=[0.03], SCI=[0.0](
00110>                       RAINFALL=[ ,  ,  ,  , ](mm/hr) ,  END=-1
00111> *%-----------------|-------------------------------------------------------|
00112> ADD HYD               IDsum=[8], NHYD=[ "080"], IDs to add=[6+7]
00113> *%-----------------|-------------------------------------------------------|
00114> ADD HYD               IDsum=[9], NHYD=[ "090"], IDs to add=[5+8]
00115> *%-----------------|-------------------------------------------------------|
00116>
00117> ROUTE RESERVOIR       IDout=[10],   NHYD=["POND"],  IDin=[9],
00118>                       RDT=[1.0](min),
00119>                              TABLE of ( OUTFLOW-STORAGE ) values
00120>                                     (cms) - (ha-m)
00121>                                [   0.000,  0.0000]
00122>                                [   0.008,  0.0656]
00123>                                [   0.017,  0.1311]
00124>                                [   0.093,  0.2831]
00125>                                [   0.233,  0.3971]
00126>                                [   0.337,  0.4731]
00127>                                [   0.465,  0.5491]
00128>                                [   0.531,  0.5871]
00129>                                [   0.593,  0.6251]
00130>                                [   0.654,  0.6631]
00131>                                [   0.797,  0.7391]
00132>                                [   0.950,  0.8274]
00133>                                [   1.304,  0.9157]
00134>                                [   1.880,  1.0040]
00135>                                [   2.577,  1.0923]
00136>                                [   -1   ,  -1    ]  (max twenty pts)
00137>
00138> ***********************************************
00139> *     Remaining Hawthorne Industrial Park     *
00140> ***********************************************
00141> *
00142> * SUB-AREA No.1
00143>
00144> CALIB STANDHYD        ID=[ 1 ], NHYD=("HIP01"), DT=[2.5](min), AREA=[19.9](ha),
00145>                       XIMP=[0.50], TIMP=[0.71], DWF=[0.0](cms), LOSS=[2],
00146>                       SCS curve number CN=[81],
00147>                       Pervious   surfaces: IAper=[4.67](mm), SLPP=[1.5](%),
00148>                                            LGP=[100.0](m), MNP=[0.25], SCP=[0.0](m
00149>                       Impervious surfaces: IAimp=[1.57](mm), SLPI=[0.6](%),
00150>                                            LGI=[580](m), MNI=[0.03], SCI=[0.0](min
00151>                       RAINFALL=[ ,  ,  ,  , ](mm/hr) ,  END=-1
00152> *%-----------------|-------------------------------------------------------|
00153> ADD HYD               IDsum=[ 2 ], NHYD=["HIP02"], IDs to add=[10+1]
00154> *%-----------------|-------------------------------------------------------|
00155> *
00156> * SUB-AREA No.2
00157>
00158> CALIB STANDHYD        ID=[ 3 ], NHYD=["HIP03"], DT=[2.5](min), AREA=[17](ha),
00159>                       XIMP=[0.50], TIMP=[0.71], DWF=[0.0](cms), LOSS=[2],
00160>                       SCS curve number CN=[81],
00161>                       Pervious   surfaces: IAper=[4.67](mm), SLPP=[1.5](%),
00162>                                            LGP=[100.0](m), MNP=[0.25], SCP=[0.0](m
00163>                       Impervious surfaces: IAimp=[1.57](mm), SLPI=[0.65](%),
00164>                                            LGI=[450](m), MNI=[0.03], SCI=[0.0](min
00165>                       RAINFALL=[ ,  ,  ,  , ](mm/hr) ,  END=-1
00166> *%-----------------|-------------------------------------------------------|
00167> *
00168> * SUB-AREA No.3
00169>
00170> CALIB STANDHYD        ID=[ 4 ], NHYD=["HIP04"], DT=[2.5](min), AREA=[15.6](ha),
00171>                       XIMP=[0.50], TIMP=[0.71], DWF=[0.0](cms), LOSS=[2],
00172>                       SCS curve number CN=[81],
00173>                       Pervious   surfaces: IAper=[4.67](mm), SLPP=[1.5](%),
00174>                                            LGP=[100.0](m), MNP=[0.25], SCP=[0.0](m
00175>                       Impervious surfaces: IAimp=[1.57](mm), SLPI=[0.5](%),
00176>                                            LGI=[600](m), MNI=[0.03], SCI=[0.0](min
00177>                       RAINFALL=[ ,  ,  ,  , ](mm/hr) ,  END=-1
00178> *%-----------------|-------------------------------------------------------|
00179> ADD HYD               IDsum=[ 5 ], NHYD=["HIP05"], IDs to add=[3+4]
00180> *%-----------------|-------------------------------------------------------|
00181> ADD HYD               IDsum=[ 6 ], NHYD=["HIP06"], IDs to add=[5+2]
00182> *%-----------------|-------------------------------------------------------|
00183> *
00184> * SUB-AREA No.4
00185>
00186> CALIB STANDHYD        ID=[ 7 ], NHYD=["HIP07"], DT=[2.5](min), AREA=[12.2](ha),
00187>                       XIMP=[0.50], TIMP=[0.71], DWF=[0.0](cms), LOSS=[2],
00188>                       SCS curve number CN=[81],
00189>                       Pervious   surfaces: IAper=[4.67](mm), SLPP=[1.5](%),
00190>                                            LGP=[100.0](m), MNP=[0.25], SCP=[0.0](m
00191>                       Impervious surfaces: IAimp=[1.57](mm), SLPI=[0.7](%),
00192>                                            LGI=[210](m), MNI=[0.03], SCI=[0.0](min
00193>                       RAINFALL=[ ,  ,  ,  , ](mm/hr) ,  END=-1
00194>
00195> *%-----------------|-------------------------------------------------------|
00196> *
00197> *SUB-AREA No.5
00198>
00199> DESIGN NASHYD         ID=[ 8 ], NHYD=["Pond-Block"], DT=[2.5]min, AREA=[4.0](ha),
00200>                       DWF=[ 0 ](cms), CN/C=[ 85 ], TP=[0.17]hrs,
00201>                       RAINFALL=[ ,  ,  ,  , ](mm/hr), END=-1
00202> *%-----------------|-------------------------------------------------------|
00203>
00204> ADD HYD               IDsum=[ 9 ], NHYD=["HIP08"], IDs to add=[6+7+8]
00205> *%-----------------|-------------------------------------------------------|
00206>
00207> ROUTE RESERVOIR       IDout=[ 10 ],   NHYD=["HIP-POND"],  IDin=[ 9 ],
00208>                       RDT=[1.0](min),
00209>                              TABLE of ( OUTFLOW-STORAGE ) values
00210>                                     (cms) - (ha-m)
00211>                                [   0.0  , 0.0    ]
00212>                                [   0.048, 0.0574 ]
00213>                                [   0.054, 0.2434 ]
00214>                                [   0.059, 0.5834 ]
00215>                                [   0.062, 0.8400 ]
00216>                                [   0.064, 1.1024 ]
00217>                                [   0.147, 1.3705 ]
00218>                                [   0.280, 1.6444 ]
00219>                                [   0.472, 1.9242 ]
00220>                                [   0.724, 2.2097 ]
00221>                                [   0.937, 2.5010 ]
00222>                                [   1.262, 2.7981 ]
00223>                                [   1.404, 3.1009 ]
00224>                                [   1.532, 3.4096 ]
00225>                                [   1.650, 3.7240 ]
00226>                                [   2.409, 4.0442 ]
00227>                                [   3.689, 4.3702 ]
00228>                                [   -1  ,  -1     ]  (max twenty pts)
00229>
00230> *%-----------------|-------------------------------------------------------|
00231> *
00232> *SUB-AREA No. 6
00233>
00234> DESIGN NASHYD         ID = [1], NHYD=["A3"], DT=[2.5]min, AREA=[2.7](ha),
00235>                       DWF=[0](cms), CNC=[76], TP=[0.80]hrs,
00236>                       RAINFALL=[ ,  ,  ,  , ](mm/hr), END=-1
00237> *%-----------------|-------------------------------------------------------|
00238>
00239> ADD HYD               IDsum=[2], NHYD=["Ultimate"], IDs to add=[10+1]
00240> *%-----------------|-------------------------------------------------------|
00241>
00242>
00243> ************************************************************
00244> *        CALCULATION OF 3HR - 1:2 YEAR STORM EVENT         *
00245> ************************************************************
00246>
00247> START                 TZERO=[0.0],  METOUT=[2],  NSTORM=[0],  NRUN=[0]
00248> *%                     [  ] <--storm filename, one per line for NSTORM time
00249> *%-----------------|-------------------------------------------------------|
00250> CHICAGO STORM         IUNITS=[2],  TD=[3.0](hrs), TPRAT=[0.333],  CSDT=[10.0](min)
00251>                       ICASEcs=[1],
00252>                       A=[732.951],  B=[6.199], and C=[0.810],
00253> *%-----------------|-------------------------------------------------------|
00254> DEFAULT VALUES        ICASEdef=[1],  read and print values
00255>                       DEFVAL_FILENAME=[V:\22973.DU\ENG\SWMHYMO\"ORGA.VAL"]
00256> *%-----------------|-------------------------------------------------------|
00257>
00258> ************************************
00259> *           ORGAWORLD FILE         *
00260> ************************************
00261> *
00262> * SUB-AREA No.1
00263>
00264> CALIB STANDHYD        ID=[ 1  ], NHYD=["010"], DT=[2.5](min), AREA=[ 2.07 ](ha),
00265>                       XIMP=[0.84], TIMP=[0.84], DWF=[0.0](cms), LOSS=[2],
00266>                       SCS curve number CN=[81],
00267>                       Pervious   surfaces: IAper=[4.67](mm), SLPP=[1.0](%),
00268>                                            LGP=[20](m), MNP=[ 0.25 ], SCP=[0.0](mi
00269>                       Impervious surfaces: IAimp=[1.57](mm), SLPI=[0.52](%),
00270>                                            LGI=[204.72](m), MNI=[0.03 ], SCI=[0.0]
```

```
00271>                      RAINFALL=[ ,  ,  ,  , ](mm/hr) ,  END=-1
00272> *%-----------------|-----------------------------------------------------------|
00273> *
00274> * SUB-AREA No.2
00275>
00276> CALIB STANDHYD       ID=[ 2  ], NHYD=["020"], DT=[2.5](min), AREA=[ 1.54 ](ha),
00277>                      XIMP=[0.92], TIMP=[0.92], DWF=[0.0](cms), LOSS=[2],
00278>                      SCS curve number CN=[81],
00279>                      Pervious   surfaces: IAper=[4.67](mm), SLPP=[1.0](%),
00280>                                           LGP=[5](m), MNP=[0.03], SCP=[0.0](min),
00281>                      Impervious surfaces: IAimp=[1.57](mm), SLPI=[0.50](%),
00282>                                           LGI=[244.34](m), MNI=[0.03 ], SCI=[0.0]
00283>                      RAINFALL=[ ,  ,  ,  , ](mm/hr) ,  END=-1
00284> *%-----------------|-----------------------------------------------------------|
00285> *
00286> * SUB-AREA No.3
00287>
00288> CALIB STANDHYD       ID=[ 3 ], NHYD=["030"], DT=[2.5](min), AREA=[1.4](ha),
00289>                      XIMP=[0.97], TIMP=[0.97], DWF=[0.0](cms), LOSS=[2],
00290>                      SCS curve number CN=[81],
00291>                      Pervious   surfaces: IAper=[4.67](mm), SLPP=[1.0](%),
00292>                                           LGP=[5](m), MNP=[0.03], SCP=[0.0](min),
00293>                      Impervious surfaces: IAimp=[1.57](mm), SLPI=[ 0.51 ](%),
00294>                                           LGI=[ 225.63 ](m), MNI=[0.03], SCI=[0.0
00295>                      RAINFALL=[ ,  ,  ,  , ](mm/hr) ,  END=-1
00296> *%-----------------|-----------------------------------------------------------|
00297> ADD HYD              IDsum=[4], NHYD=[ "040"], IDs to add=[1+2]
00298> *%-----------------|-----------------------------------------------------------|
00299> ADD HYD              IDsum=[5], NHYD=[ "050"], IDs to add=[3+4]
00300> *%-----------------|-----------------------------------------------------------|
00301> *
00302> * SUB-AREA No.4
00303>
00304> CALIB STANDHYD       ID=[6], NHYD=["060"], DT=[2.5](min), AREA=[0.89](ha),
00305>                      XIMP=[0.97], TIMP=[0.97], DWF=[0.0](cms), LOSS=[2],
00306>                      SCS curve number CN=[81],
00307>                      Pervious   surfaces: IAper=[4.67](mm), SLPP=[0.7](%),
00308>                                           LGP=[40](m), MNP=[0.25], SCP=[0.0](min)
00309>                      Impervious surfaces: IAimp=[1.57](mm), SLPI=[0.93](%),
00310>                                           LGI=[164.82](m), MNI=[0.03], SCI=[0.0](
00311>                      RAINFALL=[ ,  ,  ,  , ](mm/hr) ,  END=-1
00312> *%-----------------|-----------------------------------------------------------|
00313> *
00314> * SUB-AREA No.5
00315>
00316> CALIB STANDHYD       ID=[ 7  ], NHYD=["070"], DT=[2.5](min), AREA=[2.66](ha),
00317>                      XIMP=[0.97], TIMP=[0.97], DWF=[0.0](cms), LOSS=[2],
00318>                      SCS curve number CN=[81],
00319>                      Pervious   surfaces: IAper=[4.67](mm), SLPP=[1.5](%),
00320>                                           LGP=[20.0](m), MNP=[0.25], SCP=[0.0](mi
00321>                      Impervious surfaces: IAimp=[1.57](mm), SLPI=[0.61](%),
00322>                                           LGI=[207.25](m), MNI=[0.03], SCI=[0.0](
00323>                      RAINFALL=[ ,  ,  ,  , ](mm/hr) ,  END=-1
00324> *%-----------------|-----------------------------------------------------------|
00325> ADD HYD              IDsum=[8], NHYD=[ "080"], IDs to add=[6+7]
00326> *%-----------------|-----------------------------------------------------------|
00327> ADD HYD              IDsum=[9], NHYD=[ "090"], IDs to add=[5+8]
00328> *%-----------------|-----------------------------------------------------------|
00329>
00330> ROUTE RESERVOIR      IDout=[10],   NHYD=["POND"],  IDin=[9],
00331>                      RDT=[1.0](min),
00332>                            TABLE of ( OUTFLOW-STORAGE ) values
00333>                                        (cms) - (ha-m)
00334>                                  [   0.000,  0.0000]
00335>                                  [   0.008,  0.0656]
00336>                                  [   0.017,  0.1311]
00337>                                  [   0.093,  0.2831]
00338>                                  [   0.233,  0.3971]
00339>                                  [   0.337,  0.4731]
00340>                                  [   0.465,  0.5491]
00341>                                  [   0.531,  0.5871]
00342>                                  [   0.593,  0.6251]
00343>                                  [   0.654,  0.6631]
00344>                                  [   0.797,  0.7391]
00345>                                  [   0.950,  0.8274]
00346>                                  [   1.304,  0.9157]
00347>                                  [   1.880,  1.0040]
00348>                                  [   2.577,  1.0923]
00349>                                  [   -1  ,   -1    ]   (max twenty pts)
00350>
00351> ***********************************************
00352> *     Remaining Hawthorne Industrial Park     *
00353> ***********************************************
00354> *
00355> * SUB-AREA No.1
00356>
00357> CALIB STANDHYD       ID=[ 1 ], NHYD=["HIP01"], DT=[2.5](min), AREA=[19.9](ha),
00358>                      XIMP=[0.50], TIMP=[0.71], DWF=[0.0](cms), LOSS=[2],
00359>                      SCS curve number CN=[81],
00360>                      Pervious   surfaces: IAper=[4.67](mm), SLPP=[1.5](%),
00361>                                           LGP=[100.0](m), MNP=[0.25], SCP=[0.0](m
00362>                      Impervious surfaces: IAimp=[1.57](mm), SLPI=[0.6](%),
00363>                                           LGI=[580](m), MNI=[0.03], SCI=[0.0](min
00364>                      RAINFALL=[ ,  ,  ,  , ](mm/hr) ,  END=-1
00365> *%-----------------|-----------------------------------------------------------|
00366> ADD HYD              IDsum=[ 2 ], NHYD=["HIP02"], IDs to add=[10+1]
00367> *%-----------------|-----------------------------------------------------------|
00368> *
00369> * SUB-AREA No.2
00370>
00371> CALIB STANDHYD       ID=[ 3 ], NHYD=["HIP03"], DT=[2.5](min), AREA=[17](ha),
00372>                      XIMP=[0.50], TIMP=[0.71], DWF=[0.0](cms), LOSS=[2],
00373>                      SCS curve number CN=[81],
00374>                      Pervious   surfaces: IAper=[4.67](mm), SLPP=[1.5](%),
00375>                                           LGP=[100.0](m), MNP=[0.25], SCP=[0.0](m
00376>                      Impervious surfaces: IAimp=[1.57](mm), SLPI=[0.65](%),
00377>                                           LGI=[450](m), MNI=[0.03], SCI=[0.0](min
00378>                      RAINFALL=[ ,  ,  ,  , ](mm/hr) ,  END=-1
00379> *%-----------------|-----------------------------------------------------------|
00380> *
00381> * SUB-AREA No.3
00382>
00383> CALIB STANDHYD       ID=[ 4 ], NHYD=["HIP04"], DT=[2.5](min), AREA=[15.6](ha),
00384>                      XIMP=[0.50], TIMP=[0.71], DWF=[0.0](cms), LOSS=[2],
00385>                      SCS curve number CN=[81],
00386>                      Pervious   surfaces: IAper=[4.67](mm), SLPP=[1.5](%),
00387>                                           LGP=[100.0](m), MNP=[0.25], SCP=[0.0](m
00388>                      Impervious surfaces: IAimp=[1.57](mm), SLPI=[0.5](%),
00389>                                           LGI=[600](m), MNI=[0.03], SCI=[0.0](min
00390>                      RAINFALL=[ ,  ,  ,  , ](mm/hr) ,  END=-1
00391> *%-----------------|-----------------------------------------------------------|
00392> ADD HYD              IDsum=[ 5 ], NHYD=["HIP05"], IDs to add=[3+4]
00393> *%-----------------|-----------------------------------------------------------|
00394> ADD HYD              IDsum=[ 6 ], NHYD=["HIP06"], IDs to add=[5+2]
00395> *%-----------------|-----------------------------------------------------------|
00396> *
00397> * SUB-AREA No.4
00398>
00399> CALIB STANDHYD       ID=[ 7 ], NHYD=["HIP07"], DT=[2.5](min), AREA=[12.2](ha),
00400>                      XIMP=[0.50], TIMP=[0.71], DWF=[0.0](cms), LOSS=[2],
00401>                      SCS curve number CN=[81],
00402>                      Pervious   surfaces: IAper=[4.67](mm), SLPP=[1.5](%),
00403>                                           LGP=[100.0](m), MNP=[0.25], SCP=[0.0](m
00404>                      Impervious surfaces: IAimp=[1.57](mm), SLPI=[0.7](%),
00405>                                           LGI=[210](m), MNI=[0.03], SCI=[0.0](min
00406>                      RAINFALL=[ ,  ,  ,  , ](mm/hr) ,  END=-1
00407>
00408> *%-----------------|-----------------------------------------------------------|
00409> *
00410> *SUB-AREA No.5
00411>
00412> DESIGN NASHYD        ID=[ 8 ], NHYD=["Pond-Block"], DT=[2.5]min, AREA=[4.0](ha),
00413>                      DWF=[ 0 ](cms), CN/C=[ 85 ], TP=[0.17]hrs,
00414>                      RAINFALL=[ ,  ,  ,  , ](mm/hr), END=-1
00415> *%-----------------|-----------------------------------------------------------|
00416>
00417> ADD HYD              IDsum=[ 9 ], NHYD=["HIP08"], IDs to add=[6+7+8]
00418> *%-----------------|-----------------------------------------------------------|
00419>
00420> ROUTE RESERVOIR      IDout=[ 10 ],   NHYD=["HIP-POND"],  IDin=[ 9 ],
00421>                      RDT=[1.0](min),
00422>                            TABLE of ( OUTFLOW-STORAGE ) values
00423>                                        (cms) - (ha-m)
00424>                                  [   0.0  , 0.0    ]
00425>                                  [   0.048, 0.0574 ]
00426>                                  [   0.054, 0.2434 ]
00427>                                  [   0.059, 0.5834 ]
00428>                                  [   0.062, 0.8400 ]
00429>                                  [   0.064, 1.1024 ]
00430>                                  [   0.147, 1.3705 ]
00431>                                  [   0.280, 1.6444 ]
00432>                                  [   0.472, 1.9242 ]
00433>                                  [   0.724, 2.2097 ]
00434>                                  [   0.937, 2.5010 ]
00435>                                  [   1.262, 2.7981 ]
00436>                                  [   1.404, 3.1009 ]
00437>                                  [   1.532, 3.4096 ]
00438>                                  [   1.650, 3.7240 ]
00439>                                  [   2.409, 4.0442 ]
00440>                                  [   3.689, 4.3702 ]
00441>                                  [   -1  ,  -1     ]   (max twenty pts)
00442>
00443> *%-----------------|-----------------------------------------------------------|
00444> *
00445> *SUB-AREA No. 6
00446>
00447> DESIGN NASHYD        ID = [1], NHYD=["A3"], DT=[2.5]min, AREA=[2.7](ha),
00448>                      DWF=[0](cms), CNC=[76], TP=[0.80]hrs,
00449>                      RAINFALL=[ ,  ,  ,  , ](mm/hr), END=-1
00450> *%-----------------|-----------------------------------------------------------|
00451>
00452> ADD HYD              IDsum=[2], NHYD=["Ultimate"], IDs to add=[10+1]
00453> *%-----------------|-----------------------------------------------------------|
00454>
00455> ***********************************************************
00456> *        CALCULATION OF 3HR - 1:5 YEAR STORM EVENT        *
00457> ***********************************************************
00458>
00459> START                TZERO=[0.0],  METOUT=[2],  NSTORM=[0],  NRUN=[0]
00460> *%                   [  ] <--storm filename, one per line for NSTORM time
00461> *%-----------------|-----------------------------------------------------------|
00462> CHICAGO STORM        IUNITS=[2],  TD=[3.0](hrs), TPRAT=[0.333],  CSDT=[10.0](min)
00463>                      ICASEcs=[1],
00464>                      A=[998.071],  B=[6.053], and C=[0.814],
00465> *%-----------------|-----------------------------------------------------------|
00466> DEFAULT VALUES       ICASEdef=[1],  read and print values
00467>                      DEFVAL_FILENAME=[V:\22973.DU\ENG\SWMHYMO\"ORGA.VAL"]
00468> *%-----------------|-----------------------------------------------------------|
00469>
00470> ***********************************
00471> *          ORGAWORLD FILE         *
00472> ***********************************
00473> *
00474> * SUB-AREA No.1
00475>
00476> CALIB STANDHYD       ID=[ 1  ], NHYD=["010"], DT=[2.5](min), AREA=[ 2.07 ](ha),
00477>                      XIMP=[0.84], TIMP=[0.84], DWF=[0.0](cms), LOSS=[2],
00478>                      SCS curve number CN=[81],
00479>                      Pervious   surfaces: IAper=[4.67](mm), SLPP=[1.0](%),
00480>                                           LGP=[20](m), MNP=[ 0.25 ], SCP=[0.0](mi
00481>                      Impervious surfaces: IAimp=[1.57](mm), SLPI=[0.52](%),
00482>                                           LGI=[204.72](m), MNI=[0.03 ], SCI=[0.0]
00483>                      RAINFALL=[ ,  ,  ,  , ](mm/hr) ,  END=-1
00484> *%-----------------|-----------------------------------------------------------|
00485> *
00486> * SUB-AREA No.2
00487>
00488> CALIB STANDHYD       ID=[ 2  ], NHYD=["020"], DT=[2.5](min), AREA=[ 1.54 ](ha),
00489>                      XIMP=[0.92], TIMP=[0.92], DWF=[0.0](cms), LOSS=[2],
00490>                      SCS curve number CN=[81],
00491>                      Pervious   surfaces: IAper=[4.67](mm), SLPP=[1.0](%),
00492>                                           LGP=[5](m), MNP=[0.03], SCP=[0.0](min),
00493>                      Impervious surfaces: IAimp=[1.57](mm), SLPI=[0.50](%),
00494>                                           LGI=[244.34](m), MNI=[0.03 ], SCI=[0.0]
00495>                      RAINFALL=[ ,  ,  ,  , ](mm/hr) ,  END=-1
00496> *%-----------------|-----------------------------------------------------------|
00497> *
00498> * SUB-AREA No.3
00499>
00500> CALIB STANDHYD       ID=[ 3 ], NHYD=["030"], DT=[2.5](min), AREA=[1.4](ha),
00501>                      XIMP=[0.97], TIMP=[0.97], DWF=[0.0](cms), LOSS=[2],
00502>                      SCS curve number CN=[81],
00503>                      Pervious   surfaces: IAper=[4.67](mm), SLPP=[1.0](%),
00504>                                           LGP=[5](m), MNP=[0.03], SCP=[0.0](min),
00505>                      Impervious surfaces: IAimp=[1.57](mm), SLPI=[ 0.51 ](%),
00506>                                           LGI=[ 225.63 ](m), MNI=[0.03], SCI=[0.0
00507>                      RAINFALL=[ ,  ,  ,  , ](mm/hr) ,  END=-1
00508> *%-----------------|-----------------------------------------------------------|
00509> ADD HYD              IDsum=[4], NHYD=[ "040"], IDs to add=[1+2]
00510> *%-----------------|-----------------------------------------------------------|
00511> ADD HYD              IDsum=[5], NHYD=[ "050"], IDs to add=[3+4]
00512> *%-----------------|-----------------------------------------------------------|
00513> *
00514> * SUB-AREA No.4
00515>
00516> CALIB STANDHYD       ID=[6], NHYD=["060"], DT=[2.5](min), AREA=[0.89](ha),
00517>                      XIMP=[0.97], TIMP=[0.97], DWF=[0.0](cms), LOSS=[2],
00518>                      SCS curve number CN=[81],
00519>                      Pervious   surfaces: IAper=[4.67](mm), SLPP=[0.7](%),
00520>                                           LGP=[40](m), MNP=[0.25], SCP=[0.0](min)
00521>                      Impervious surfaces: IAimp=[1.57](mm), SLPI=[0.93](%),
00522>                                           LGI=[164.82](m), MNI=[0.03], SCI=[0.0](
00523>                      RAINFALL=[ ,  ,  ,  , ](mm/hr) ,  END=-1
00524> *%-----------------|-----------------------------------------------------------|
00525> *
00526> * SUB-AREA No.5
00527>
00528> CALIB STANDHYD       ID=[ 7  ], NHYD=["070"], DT=[2.5](min), AREA=[2.66](ha),
00529>                      XIMP=[0.97], TIMP=[0.97], DWF=[0.0](cms), LOSS=[2],
00530>                      SCS curve number CN=[81],
00531>                      Pervious   surfaces: IAper=[4.67](mm), SLPP=[1.5](%),
00532>                                           LGP=[20.0](m), MNP=[0.25], SCP=[0.0](mi
00533>                      Impervious surfaces: IAimp=[1.57](mm), SLPI=[0.61](%),
00534>                                           LGI=[207.25](m), MNI=[0.03], SCI=[0.0](
00535>                      RAINFALL=[ ,  ,  ,  , ](mm/hr) ,  END=-1
00536> *%-----------------|-----------------------------------------------------------|
00537> ADD HYD              IDsum=[8], NHYD=[ "080"], IDs to add=[6+7]
00538> *%-----------------|-----------------------------------------------------------|
00539> ADD HYD              IDsum=[9], NHYD=[ "090"], IDs to add=[5+8]
00540> *%-----------------|-----------------------------------------------------------|
```

```
00541>
00542> ROUTE RESERVOIR      IDout=[10],   NHYD=["POND"],  IDin=[9],
00543>                      RDT=[1.0](min),
00544>                            TABLE of ( OUTFLOW-STORAGE ) values
00545>                                (cms) - (ha-m)
00546>                                [   0.000,  0.0000]
00547>                                [   0.008,  0.0656]
00548>                                [   0.017,  0.1311]
00549>                                [   0.093,  0.2831]
00550>                                [   0.233,  0.3971]
00551>                                [   0.337,  0.4731]
00552>                                [   0.465,  0.5491]
00553>                                [   0.531,  0.5871]
00554>                                [   0.593,  0.6251]
00555>                                [   0.654,  0.6631]
00556>                                [   0.797,  0.7391]
00557>                                [   0.950,  0.8274]
00558>                                [   1.304,  0.9157]
00559>                                [   1.880,  1.0040]
00560>                                [   2.577,  1.0923]
00561>                                [   -1   ,  -1    ]  (max twenty pts)
00562>
00563> ***********************************************
00564> *     Remaining Hawthorne Industrial Park     *
00565> ***********************************************
00566> *
00567> * SUB-AREA No.1
00568>
00569> CALIB STANDHYD        ID=[ 1 ], NHYD=["HIP01"], DT=[2.5](min), AREA=[19.9](ha),
00570>                      XIMP=[0.50], TIMP=[0.71], DWF=[0.0](cms), LOSS=[2],
00571>                      SCS curve number CN=[81],
00572>                      Pervious   surfaces: IAper=[4.67](mm), SLPP=[1.5](%),
00573>                                           LGP=[100.0](m), MNP=[0.25], SCP=[0.0](m
00574>                      Impervious surfaces: IAimp=[1.57](mm), SLPI=[0.6](%),
00575>                                           LGI=[580](m), MNI=[0.03], SCI=[0.0](min
00576>                      RAINFALL=[ ,  ,  ,  , ](mm/hr) ,  END=-1
00577> *%-----------------|-------------------------------------------------------------|
00578> ADD HYD              IDsum=[ 2 ], NHYD=["HIP02"], IDs to add=[10+1]
00579> *%-----------------|-------------------------------------------------------------|
00580> *
00581> * SUB-AREA No.2
00582>
00583> CALIB STANDHYD        ID=[ 3 ], NHYD=["HIP03"], DT=[2.5](min), AREA=[17](ha),
00584>                      XIMP=[0.50], TIMP=[0.71], DWF=[0.0](cms), LOSS=[2],
00585>                      SCS curve number CN=[81],
00586>                      Pervious   surfaces: IAper=[4.67](mm), SLPP=[1.5](%),
00587>                                           LGP=[100.0](m), MNP=[0.25], SCP=[0.0](m
00588>                      Impervious surfaces: IAimp=[1.57](mm), SLPI=[0.65](%),
00589>                                           LGI=[450](m), MNI=[0.03], SCI=[0.0](min
00590>                      RAINFALL=[ ,  ,  ,  , ](mm/hr) ,  END=-1
00591> *%-----------------|-------------------------------------------------------------|
00592> *
00593> * SUB-AREA No.3
00594>
00595> CALIB STANDHYD        ID=[ 4 ], NHYD=["HIP04"], DT=[2.5](min), AREA=[15.6](ha),
00596>                      XIMP=[0.50], TIMP=[0.71], DWF=[0.0](cms), LOSS=[2],
00597>                      SCS curve number CN=[81],
00598>                      Pervious   surfaces: IAper=[4.67](mm), SLPP=[1.5](%),
00599>                                           LGP=[100.0](m), MNP=[0.25], SCP=[0.0](m
00600>                      Impervious surfaces: IAimp=[1.57](mm), SLPI=[0.5](%),
00601>                                           LGI=[600](m), MNI=[0.03], SCI=[0.0](min
00602>                      RAINFALL=[ ,  ,  ,  , ](mm/hr) ,  END=-1
00603> *%-----------------|-------------------------------------------------------------|
00604> ADD HYD              IDsum=[ 5 ], NHYD=["HIP05"], IDs to add=[3+4]
00605> *%-----------------|-------------------------------------------------------------|
00606> ADD HYD              IDsum=[ 6 ], NHYD=["HIP06"], IDs to add=[5+2]
00607> *%-----------------|-------------------------------------------------------------|
00608> *
00609> * SUB-AREA No.4
00610>
00611> CALIB STANDHYD        ID=[ 7 ], NHYD=["HIP07"], DT=[2.5](min), AREA=[12.2](ha),
00612>                      XIMP=[0.50], TIMP=[0.71], DWF=[0.0](cms), LOSS=[2],
00613>                      SCS curve number CN=[81],
00614>                      Pervious   surfaces: IAper=[4.67](mm), SLPP=[1.5](%),
00615>                                           LGP=[100.0](m), MNP=[0.25], SCP=[0.0](m
00616>                      Impervious surfaces: IAimp=[1.57](mm), SLPI=[0.7](%),
00617>                                           LGI=[210](m), MNI=[0.03], SCI=[0.0](min
00618>                      RAINFALL=[ ,  ,  ,  , ](mm/hr) ,  END=-1
00619>
00620> *%-----------------|-------------------------------------------------------------|
00621> *
00622> *SUB-AREA No.5
00623>
00624> DESIGN NASHYD        ID=[ 8 ], NHYD=["Pond-Block"], DT=[2.5]min, AREA=[4.0](ha),
00625>                      DWF=[ 0 ](cms), CN/C=[ 85 ], TP=[0.17]hrs,
00626>                      RAINFALL=[ ,  ,  ,  , ](mm/hr), END=-1
00627> *%-----------------|-------------------------------------------------------------|
00628>
00629> ADD HYD              IDsum=[ 9 ], NHYD=["HIP08"], IDs to add=[6+7+8]
00630> *%-----------------|-------------------------------------------------------------|
00631>
00632> ROUTE RESERVOIR      IDout=[ 10 ],   NHYD=["HIP-POND"],  IDin=[ 9 ],
00633>                      RDT=[1.0](min),
00634>                            TABLE of ( OUTFLOW-STORAGE ) values
00635>                                (cms) - (ha-m)
00636>                                [   0.0  , 0.0    ]
00637>                                [   0.048, 0.0574 ]
00638>                                [   0.054, 0.2434 ]
00639>                                [   0.059, 0.5834 ]
00640>                                [   0.062, 0.8400 ]
00641>                                [   0.064, 1.1024 ]
00642>                                [   0.147, 1.3705 ]
00643>                                [   0.280, 1.6444 ]
00644>                                [   0.472, 1.9242 ]
00645>                                [   0.724, 2.2097 ]
00646>                                [   0.937, 2.5010 ]
00647>                                [   1.262, 2.7981 ]
00648>                                [   1.404, 3.1009 ]
00649>                                [   1.532, 3.4096 ]
00650>                                [   1.650, 3.7240 ]
00651>                                [   2.409, 4.0442 ]
00652>                                [   3.689, 4.3702 ]
00653>                                [   -1  ,  -1     ]  (max twenty pts)
00654>
00655> *%-----------------|-------------------------------------------------------------|
00656> *
00657> *SUB-AREA No. 6
00658>
00659> DESIGN NASHYD        ID = (1], NHYD=["A3"], DT=[2.5]min, AREA=[2.7](ha),
00660>                      DWF=[0](cms), CNC=[76], TP=[0.80]hrs,
00661>                      RAINFALL=[ ,  ,  ,  , ](mm/hr), END=-1
00662> *%-----------------|-------------------------------------------------------------|
00663>
00664> ADD HYD              IDsum=[2], NHYD=["Ultimate"], IDs to add=[10+1]
00665> *%-----------------|-------------------------------------------------------------|
00666>
00667> ***********************************************************
00668> *        CALCULATION OF 3HR - 1:10 YEAR STORM EVENT       *
00669> ***********************************************************
00670>
00671> START                T2ERO=[0.0],  METOUT=[2],  NSTORM=[0],  NRUN=[0]
00672> *%                   [  ] <--storm filename, one per line for NSTORM time
00673> *%-----------------|-------------------------------------------------------------|
00674> CHICAGO STORM        IUNITS=[2],  TD=[3.0](hrs), TPRAT=[0.333],  CSDT=[10.0](min)
00675>                      ICASEcs=[1],
00676>                      A=[1174.184],  B=[6.014], and C=[0.816],
00677> *%-----------------|-------------------------------------------------------------|
00678> DEFAULT VALUES       ICASEdef=[1],  read and print values
00679>                      DEFVAL_FILENAME=[V:\22973.DU\ENG\SWMHYMO\"ORGA.VAL"]
00680> *%-----------------|-------------------------------------------------------------|
00681>
00682> ***********************************
00683> *          ORGAWORLD FILE         *
00684> ***********************************
00685> *
00686> * SUB-AREA No.1
00687>
00688> CALIB STANDHYD        ID=[ 1  ], NHYD=["010"], DT=[2.5](min), AREA=[ 2.07 ](ha),
00689>                      XIMP=[0.84], TIMP=[0.84], DWF=[0.0](cms), LOSS=[2],
00690>                      SCS curve number CN=[81],
00691>                      Pervious   surfaces: IAper=[4.67](mm), SLPP=[1.0](%),
00692>                                           LGP=[20](m), MNP=[ 0.25 ], SCP=[0.0](mi
00693>                      Impervious surfaces: IAimp=[1.57](mm), SLPI=[0.52](%),
00694>                                           LGI=[204.72](m), MNI=[0.03 ], SCI=[0.0]
00695>                      RAINFALL=[ ,  ,  ,  , ](mm/hr) ,  END=-1
00696> *%-----------------|-------------------------------------------------------------|
00697> *
00698> * SUB-AREA No.2
00699>
00700> CALIB STANDHYD        ID=[ 2  ], NHYD=["020"], DT=[2.5](min), AREA=[ 1.54 ](ha),
00701>                      XIMP=[0.92], TIMP=[0.92], DWF=[0.0](cms), LOSS=[2],
00702>                      SCS curve number CN=[81],
00703>                      Pervious   surfaces: IAper=[4.67](mm), SLPP=[1.0](%),
00704>                                           LGP=[5](m), MNP=[0.03], SCP=[0.0](min),
00705>                      Impervious surfaces: IAimp=[1.57](mm), SLPI=[0.50](%),
00706>                                           LGI=[244.34](m), MNI=[0.03 ], SCI=[0.0]
00707>                      RAINFALL=[ ,  ,  ,  , ](mm/hr) ,  END=-1
00708> *%-----------------|-------------------------------------------------------------|
00709> *
00710> * SUB-AREA No.3
00711>
00712> CALIB STANDHYD        ID=[ 3 ], NHYD=["030"], DT=[2.5](min), AREA=[1.4](ha),
00713>                      XIMP=[0.97], TIMP=[0.97], DWF=[0.0](cms), LOSS=[2],
00714>                      SCS curve number CN=[81],
00715>                      Pervious   surfaces: IAper=[4.67](mm), SLPP=[1.0](%),
00716>                                           LGP=[5](m), MNP=[0.03], SCP=[0.0](min),
00717>                      Impervious surfaces: IAimp=[1.57](mm), SLPI=[ 0.51 ](%),
00718>                                           LGI=[ 225.63 ](m), MNI=[0.03], SCI=[0.0
00719>                      RAINFALL=[ ,  ,  ,  , ](mm/hr) ,  END=-1
00720> *%-----------------|-------------------------------------------------------------|
00721> ADD HYD              IDsum=[4], NHYD=[ "040"], IDs to add=[1+2]
00722> *%-----------------|-------------------------------------------------------------|
00723> ADD HYD              IDsum=[5], NHYD=[ "050"], IDs to add=[3+4]
00724> *%-----------------|-------------------------------------------------------------|
00725> *
00726> * SUB-AREA No.4
00727>
00728> CALIB STANDHYD        ID=[6], NHYD=["060"], DT=[2.5](min), AREA=[0.89](ha),
00729>                      XIMP=[0.97], TIMP=[0.97], DWF=[0.0](cms), LOSS=[2],
00730>                      SCS curve number CN=[81],
00731>                      Pervious   surfaces: IAper=[4.67](mm), SLPP=[0.7](%),
00732>                                           LGP=[40](m), MNP=[0.25], SCP=[0.0](min)
00733>                      Impervious surfaces: IAimp=[1.57](mm), SLPI=[0.93](%),
00734>                                           LGI=[164.82](m), MNI=[0.03], SCI=[0.0](
00735>                      RAINFALL=[ ,  ,  ,  , ](mm/hr) ,  END=-1
00736> *%-----------------|-------------------------------------------------------------|
00737> *
00738> * SUB-AREA No.5
00739>
00740> CALIB STANDHYD        ID=[ 7  ], NHYD=["070"], DT=[2.5](min), AREA=[2.66](ha),
00741>                      XIMP=[0.97], TIMP=[0.97], DWF=[0.0](cms), LOSS=[2],
00742>                      SCS curve number CN=[81],
00743>                      Pervious   surfaces: IAper=[4.67](mm), SLPP=[1.5](%),
00744>                                           LGP=[20.0](m), MNP=[0.25], SCP=[0.0](mi
00745>                      Impervious surfaces: IAimp=[1.57](mm), SLPI=[0.61](%),
00746>                                           LGI=[207.25](m), MNI=[0.03], SCI=[0.0](
00747>                      RAINFALL=[ ,  ,  ,  , ](mm/hr) ,  END=-1
00748> *%-----------------|-------------------------------------------------------------|
00749> ADD HYD              IDsum=[8], NHYD=[ "080"], IDs to add=[6+7]
00750> *%-----------------|-------------------------------------------------------------|
00751> ADD HYD              IDsum=[9], NHYD=[ "090"], IDs to add=[5+8]
00752> *%-----------------|-------------------------------------------------------------|
00753>
00754> ROUTE RESERVOIR      IDout=[10],   NHYD=["POND"],  IDin=[9],
00755>                      RDT=[1.0](min),
00756>                            TABLE of ( OUTFLOW-STORAGE ) values
00757>                                (cms) - (ha-m)
00758>                                [   0.000,  0.0000]
00759>                                [   0.008,  0.0656]
00760>                                [   0.017,  0.1311]
00761>                                [   0.093,  0.2831]
00762>                                [   0.233,  0.3971]
00763>                                [   0.337,  0.4731]
00764>                                [   0.465,  0.5491]
00765>                                [   0.531,  0.5871]
00766>                                [   0.593,  0.6251]
00767>                                [   0.654,  0.6631]
00768>                                [   0.797,  0.7391]
00769>                                [   0.950,  0.8274]
00770>                                [   1.304,  0.9157]
00771>                                [   1.880,  1.0040]
00772>                                [   2.577,  1.0923]
00773>                                [   -1   ,  -1    ]  (max twenty pts)
00774>
00775> ***********************************************
00776> *     Remaining Hawthorne Industrial Park     *
00777> ***********************************************
00778> *
00779> * SUB-AREA No.1
00780>
00781> CALIB STANDHYD        ID=[ 1 ], NHYD=["HIP01"], DT=[2.5](min), AREA=[19.9](ha),
00782>                      XIMP=[0.50], TIMP=[0.71], DWF=[0.0](cms), LOSS=[2],
00783>                      SCS curve number CN=[81],
00784>                      Pervious   surfaces: IAper=[4.67](mm), SLPP=[1.5](%),
00785>                                           LGP=[100.0](m), MNP=[0.25], SCP=[0.0](m
00786>                      Impervious surfaces: IAimp=[1.57](mm), SLPI=[0.6](%),
00787>                                           LGI=[580](m), MNI=[0.03], SCI=[0.0](min
00788>                      RAINFALL=[ ,  ,  ,  , ](mm/hr) ,  END=-1
00789> *%-----------------|-------------------------------------------------------------|
00790> ADD HYD              IDsum=[ 2 ], NHYD=["HIP02"], IDs to add=[10+1]
00791> *%-----------------|-------------------------------------------------------------|
00792> *
00793> * SUB-AREA No.2
00794>
00795> CALIB STANDHYD        ID=[ 3 ], NHYD=["HIP03"], DT=[2.5](min), AREA=[17](ha),
00796>                      XIMP=[0.50], TIMP=[0.71], DWF=[0.0](cms), LOSS=[2],
00797>                      SCS curve number CN=[81],
00798>                      Pervious   surfaces: IAper=[4.67](mm), SLPP=[1.5](%),
00799>                                           LGP=[100.0](m), MNP=[0.25], SCP=[0.0](m
00800>                      Impervious surfaces: IAimp=[1.57](mm), SLPI=[0.65](%),
00801>                                           LGI=[450](m), MNI=[0.03], SCI=[0.0](min
00802>                      RAINFALL=[ ,  ,  ,  , ](mm/hr) ,  END=-1
00803> *%-----------------|-------------------------------------------------------------|
00804> *
00805> * SUB-AREA No.3
00806>
00807> CALIB STANDHYD        ID=[ 4 ], NHYD=["HIP04"], DT=[2.5](min), AREA=[15.6](ha),
00808>                      XIMP=[0.50], TIMP=[0.71], DWF=[0.0](cms), LOSS=[2],
00809>                      SCS curve number CN=[81],
00810>                      Pervious   surfaces: IAper=[4.67](mm), SLPP=[1.5](%),
```

```
                                                  LGP=[100.0](m), MNP=[0.25], SCP=[0.0](m
                         Impervious surfaces: IAimp=[1.57](mm), SLPI=[0.5](%),
                                                  LGI=[600](m), MNI=[0.03], SCI=[0.0](min
                         RAINFALL=[ ,  ,  ,  , ](mm/hr) ,  END=-1
*%-----------------|-------------------------------------------------------------|
ADD HYD                  IDsum=[ 5 ], NHYD=["HIP05"], IDs to add=[3+4]
*%-----------------|-------------------------------------------------------------|
ADD HYD                  IDsum=[ 6 ], NHYD=["HIP06"], IDs to add=[5+2]
*%-----------------|-------------------------------------------------------------|
*
* SUB-AREA No.4
CALIB STANDHYD           ID=[ 7 ], NHYD=["HIP07"], DT=[2.5](min), AREA=[12.2](ha),
                         XIMP=[0.50], TIMP=[0.71], DWF=[0.0](cms), LOSS=[2],
                         SCS curve number CN=[81],
                         Pervious   surfaces: IAper=[4.67](mm), SLPP=[1.5](%),
                                                  LGP=[100.0](m), MNP=[0.25], SCP=[0.0](m
                         Impervious surfaces: IAimp=[1.57](mm), SLPI=[0.7](%),
                                                  LGI=[210](m), MNI=[0.03], SCI=[0.0](min
                         RAINFALL=[ ,  ,  ,  , ](mm/hr) ,  END=-1
*%-----------------|-------------------------------------------------------------|
*
*SUB-AREA No.5
DESIGN NASHYD            ID=[ 8 ], NHYD=["Pond-Block"], DT=[2.5]min, AREA=[4.0](ha),
                         DWF=[ 0 ](cms), CN/C=[ 85 ], TP=[0.17]hrs,
                         RAINFALL=[ ,  ,  ,  , ](mm/hr), END=-1
*%-----------------|-------------------------------------------------------------|
ADD HYD                  IDsum=[ 9 ], NHYD=["HIP08"], IDs to add=[6+7+8]
*%-----------------|-------------------------------------------------------------|
ROUTE RESERVOIR          IDout=[ 10 ],   NHYD=["HIP-POND"],  IDin=[ 9 ],
                         RDT=[1.0](min),
                                TABLE of ( OUTFLOW-STORAGE ) values
                                          (cms) - (ha-m)
                                       [   0.0  , 0.0    ]
                                       [   0.048, 0.0574 ]
                                       [   0.054, 0.2434 ]
                                       [   0.059, 0.5834 ]
                                       [   0.062, 0.8400 ]
                                       [   0.064, 1.1024 ]
                                       [   0.147, 1.3705 ]
                                       [   0.280, 1.6444 ]
                                       [   0.472, 1.9242 ]
                                       [   0.724, 2.2097 ]
                                       [   0.937, 2.5010 ]
                                       [   1.262, 2.7981 ]
                                       [   1.404, 3.1009 ]
                                       [   1.532, 3.4096 ]
                                       [   1.650, 3.7240 ]
                                       [   2.409, 4.0442 ]
                                       [   3.689, 4.3702 ]
                                       [   -1  ,  -1    ]  (max twenty pts)
*%-----------------|-------------------------------------------------------------|
*
*SUB-AREA No. 6
DESIGN NASHYD            ID = [1], NHYD=["A3"], DT=[2.5]min, AREA=[2.7](ha),
                         DWF=[0](cms), CNC=[76], TP=[0.80]hrs,
                         RAINFALL=[ ,  ,  ,  , ](mm/hr), END=-1
*%-----------------|-------------------------------------------------------------|
ADD HYD                  IDsum=[2], NHYD=["Ultimate"], IDs to add=[10+1]
*%-----------------|-------------------------------------------------------------|
*****************************************************************
*          CALCULATION OF 3HR - 1:25 YEAR STORM EVENT           *
*****************************************************************
START                    TZERO=[0.0],  METOUT=[2],  NSTORM=[0],  NRUN=[0]
*%                        [  ] <--storm filename, one per line for NSTORM time
*%-----------------|-------------------------------------------------------------|
CHICAGO STORM            IUNITS=[2],  TD=[3.0](hrs), TPRAT=[0.333],  CSDT=[10.0](min)
                         ICASEcs=[1],
                         A=[1402.884],  B=[6.018], and C=[0.819],
*%-----------------|-------------------------------------------------------------|
DEFAULT VALUES           ICASEdef=[1],  read and print values
                         DEFVAL_FILENAME=[V:\22973.DU\ENG\SWMHYMO\"ORGA.VAL"]
*%-----------------|-------------------------------------------------------------|
************************************
*           ORGAWORLD FILE         *
************************************
*
* SUB-AREA No.1
CALIB STANDHYD           ID=[ 1  ], NHYD=["010"], DT=[2.5](min), AREA=[ 2.07 ](ha),
                         XIMP=[0.84], TIMP=[0.84], DWF=[0.0](cms), LOSS=[2],
                         SCS curve number CN=[81],
                         Pervious   surfaces: IAper=[4.67](mm), SLPP=[1.0](%),
                                              LGP=[20](m), MNP=[ 0.25 ], SCP=[0.0](mi
                         Impervious surfaces: IAimp=[1.57](mm), SLPI=[0.52](%),
                                              LGI=[204.72](m), MNI=[0.03 ], SCI=[0.0]
                         RAINFALL=[ ,  ,  ,  , ](mm/hr) ,  END=-1
*%-----------------|-------------------------------------------------------------|
*
* SUB-AREA No.2
CALIB STANDHYD           ID=[ 2  ], NHYD=["020"], DT=[2.5](min), AREA=[ 1.54 ](ha),
                         XIMP=[0.92], TIMP=[0.92], DWF=[0.0](cms), LOSS=[2],
                         SCS curve number CN=[81],
                         Pervious   surfaces: IAper=[4.67](mm), SLPP=[1.0](%),
                                              LGP=[5](m), MNP=[0.03], SCP=[0.0](min),
                         Impervious surfaces: IAimp=[1.57](mm), SLPI=[0.50](%),
                                              LGI=[244.34](m), MNI=[0.03 ], SCI=[0.0]
                         RAINFALL=[ ,  ,  ,  , ](mm/hr) ,  END=-1
*%-----------------|-------------------------------------------------------------|
*
* SUB-AREA No.3
CALIB STANDHYD           ID=[ 3 ], NHYD=["030"], DT=[2.5](min), AREA=[1.4](ha),
                         XIMP=[0.97], TIMP=[0.97], DWF=[0.0](cms), LOSS=[2],
                         SCS curve number CN=[81],
                         Pervious   surfaces: IAper=[4.67](mm), SLPP=[1.0](%),
                                              LGP=[5](m), MNP=[0.03], SCP=[0.0](min),
                         Impervious surfaces: IAimp=[1.57](mm), SLPI=[ 0.51 ](%),
                                              LGI=[ 225.63 ](m), MNI=[0.03], SCI=[0.0
                         RAINFALL=[ ,  ,  ,  , ](mm/hr) ,  END=-1
*%-----------------|-------------------------------------------------------------|
ADD HYD                  IDsum=[4], NHYD=[ "040"], IDs to add=[1+2]
*%-----------------|-------------------------------------------------------------|
ADD HYD                  IDsum=[5], NHYD=[ "050"], IDs to add=[3+4]
*%-----------------|-------------------------------------------------------------|
*
* SUB-AREA No.4
CALIB STANDHYD           ID=[6], NHYD=["060"], DT=[2.5](min), AREA=[0.89](ha),
                         XIMP=[0.97], TIMP=[0.97], DWF=[0.0](cms), LOSS=[2],
                         SCS curve number CN=[81],
                         Pervious   surfaces: IAper=[4.67](mm), SLPP=[0.7](%),
                                              LGP=[40](m), MNP=[0.25], SCP=[0.0](min)
                         Impervious surfaces: IAimp=[1.57](mm), SLPI=[0.93](%),
                                              LGI=[164.82](m), MNI=[0.03], SCI=[0.0](
                         RAINFALL=[ ,  ,  ,  , ](mm/hr) ,  END=-1
*%-----------------|-------------------------------------------------------------|
*
* SUB-AREA No.5
CALIB STANDHYD           ID=[ 7  ], NHYD=["070"], DT=[2.5](min), AREA=[2.66](ha),
                         XIMP=[0.97], TIMP=[0.97], DWF=[0.0](cms), LOSS=[2],
                         SCS curve number CN=[81],
                         Pervious   surfaces: IAper=[4.67](mm), SLPP=[1.5](%),
                                              LGP=[20.0](m), MNP=[0.25], SCP=[0.0](mi
                         Impervious surfaces: IAimp=[1.57](mm), SLPI=[0.61](%),
                                              LGI=[207.25](m), MNI=[0.03], SCI=[0.0](
                         RAINFALL=[ ,  ,  ,  , ](mm/hr) ,  END=-1
*%-----------------|-------------------------------------------------------------|
ADD HYD                  IDsum=[8], NHYD=[ "080"], IDs to add=[6+7]
*%-----------------|-------------------------------------------------------------|
ADD HYD                  IDsum=[9], NHYD=[ "090"], IDs to add=[5+8]
*%-----------------|-------------------------------------------------------------|
ROUTE RESERVOIR          IDout=[10],   NHYD=["POND"],  IDin=[9],
                         RDT=[1.0](min),
                                TABLE of ( OUTFLOW-STORAGE ) values
                                          (cms) - (ha-m)
                                       [   0.000,  0.0000]
                                       [   0.008,  0.0656]
                                       [   0.017,  0.1311]
                                       [   0.093,  0.2831]
                                       [   0.233,  0.3971]
                                       [   0.337,  0.4731]
                                       [   0.465,  0.5491]
                                       [   0.531,  0.5871]
                                       [   0.593,  0.6251]
                                       [   0.654,  0.6631]
                                       [   0.797,  0.7391]
                                       [   0.950,  0.8274]
                                       [   1.304,  0.9157]
                                       [   1.880,  1.0040]
                                       [   2.577,  1.0923]
                                       [   -1   ,  -1    ]  (max twenty pts)
**********************************************
*     Remaining Hawthorne Industrial Park    *
**********************************************
*
* SUB-AREA No.1
CALIB STANDHYD           ID=[ 1 ], NHYD=["HIP01"], DT=[2.5](min), AREA=[19.9](ha),
                         XIMP=[0.50], TIMP=[0.71], DWF=[0.0](cms), LOSS=[2],
                         SCS curve number CN=[81],
                         Pervious   surfaces: IAper=[4.67](mm), SLPP=[1.5](%),
                                                  LGP=[100.0](m), MNP=[0.25], SCP=[0.0](m
                         Impervious surfaces: IAimp=[1.57](mm), SLPI=[0.6](%),
                                                  LGI=[580](m), MNI=[0.03], SCI=[0.0](min
                         RAINFALL=[ ,  ,  ,  , ](mm/hr) ,  END=-1
*%-----------------|-------------------------------------------------------------|
ADD HYD                  IDsum=[ 2 ], NHYD=["HIP02"], IDs to add=[10+1]
*%-----------------|-------------------------------------------------------------|
*
* SUB-AREA No.2
CALIB STANDHYD           ID=[ 3 ], NHYD=["HIP03"], DT=[2.5](min), AREA=[17](ha),
                         XIMP=[0.50], TIMP=[0.71], DWF=[0.0](cms), LOSS=[2],
                         SCS curve number CN=[81],
                         Pervious   surfaces: IAper=[4.67](mm), SLPP=[1.5](%),
                                                  LGP=[100.0](m), MNP=[0.25], SCP=[0.0](m
                         Impervious surfaces: IAimp=[1.57](mm), SLPI=[0.65](%),
                                                  LGI=[450](m), MNI=[0.03], SCI=[0.0](min
                         RAINFALL=[ ,  ,  ,  , ](mm/hr) ,  END=-1
*%-----------------|-------------------------------------------------------------|
*
* SUB-AREA No.3
CALIB STANDHYD           ID=[ 4 ], NHYD=["HIP04"], DT=[2.5](min), AREA=[15.6](ha),
                         XIMP=[0.50], TIMP=[0.71], DWF=[0.0](cms), LOSS=[2],
                         SCS curve number CN=[81],
                         Pervious   surfaces: IAper=[4.67](mm), SLPP=[1.5](%),
                                                  LGP=[100.0](m), MNP=[0.25], SCP=[0.0](m
                         Impervious surfaces: IAimp=[1.57](mm), SLPI=[0.5](%),
                                                  LGI=[600](m), MNI=[0.03], SCI=[0.0](min
                         RAINFALL=[ ,  ,  ,  , ](mm/hr) ,  END=-1
*%-----------------|-------------------------------------------------------------|
ADD HYD                  IDsum=[ 5 ], NHYD=["HIP05"], IDs to add=[3+4]
*%-----------------|-------------------------------------------------------------|
ADD HYD                  IDsum=[ 6 ], NHYD=["HIP06"], IDs to add=[5+2]
*%-----------------|-------------------------------------------------------------|
*
* SUB-AREA No.4
CALIB STANDHYD           ID=[ 7 ], NHYD=["HIP07"], DT=[2.5](min), AREA=[12.2](ha),
                         XIMP=[0.50], TIMP=[0.71], DWF=[0.0](cms), LOSS=[2],
                         SCS curve number CN=[81],
                         Pervious   surfaces: IAper=[4.67](mm), SLPP=[1.5](%),
                                                  LGP=[100.0](m), MNP=[0.25], SCP=[0.0](m
                         Impervious surfaces: IAimp=[1.57](mm), SLPI=[0.7](%),
                                                  LGI=[210](m), MNI=[0.03], SCI=[0.0](min
                         RAINFALL=[ ,  ,  ,  , ](mm/hr) ,  END=-1
*%-----------------|-------------------------------------------------------------|
*
*SUB-AREA No.5
DESIGN NASHYD            ID=[ 8 ], NHYD=["Pond-Block"], DT=[2.5]min, AREA=[4.0](ha),
                         DWF=[ 0 ](cms), CN/C=[ 85 ], TP=[0.17]hrs,
                         RAINFALL=[ ,  ,  ,  , ](mm/hr), END=-1
*%-----------------|-------------------------------------------------------------|
ADD HYD                  IDsum=[ 9 ], NHYD=["HIP08"], IDs to add=[6+7+8]
*%-----------------|-------------------------------------------------------------|
ROUTE RESERVOIR          IDout=[ 10 ],   NHYD=["HIP-POND"],  IDin=[ 9 ],
                         RDT=[1.0](min),
                                TABLE of ( OUTFLOW-STORAGE ) values
                                          (cms) - (ha-m)
                                       [   0.0  , 0.0    ]
                                       [   0.048, 0.0574 ]
                                       [   0.054, 0.2434 ]
                                       [   0.059, 0.5834 ]
                                       [   0.062, 0.8400 ]
                                       [   0.064, 1.1024 ]
                                       [   0.147, 1.3705 ]
                                       [   0.280, 1.6444 ]
                                       [   0.472, 1.9242 ]
                                       [   0.724, 2.2097 ]
                                       [   0.937, 2.5010 ]
                                       [   1.262, 2.7981 ]
                                       [   1.404, 3.1009 ]
                                       [   1.532, 3.4096 ]
                                       [   1.650, 3.7240 ]
                                       [   2.409, 4.0442 ]
                                       [   3.689, 4.3702 ]
                                       [   -1  ,  -1    ]  (max twenty pts)
*%-----------------|-------------------------------------------------------------|
```

```
01081> *
01082> *SUB-AREA No. 6
01083>
01084> DESIGN NASHYD        ID = [1], NHYD=["A3"], DT=[2.5]min, AREA=[2.7](ha),
01085>                      DWF=[0](cms), CNC=[76], TP=[0.80]hrs,
01086>                      RAINFALL=[ ,  ,  ,  , ](mm/hr), END=-1
01087> *%-----------------|-----------------------------------------------------|
01088>
01089> ADD HYD             IDsum=[2], NHYD=["Ultimate"], IDs to add=[10+1]
01090> *%-----------------|-----------------------------------------------------|
01091>
01092> ************************************************************
01093> *        CALCULATION OF 3HR - 1:50 YEAR STORM EVENT        *
01094> ************************************************************
01095>
01096> START               TZERO=[0.0],  METOUT=[2],  NSTORM=[0],  NRUN=[0]
01097> *%                   [  ] <--storm filename, one per line for NSTORM time
01098> *%-----------------|-----------------------------------------------------|
01099> CHICAGO STORM       IUNITS=[2],  TD=[3.0](hrs), TPRAT=[0.333],  CSDT=[10.0](min)
01100>                     ICASEcs=[1],
01101>                     A=[1569.580],  B=[6.014], and C=[0.820],
01102> *%-----------------|-----------------------------------------------------|
01103> DEFAULT VALUES      ICASEdef=[1],  read and print values
01104>                     DEFVAL_FILENAME=[V:\22973.DU\ENG\SWMHYMO\"ORGA.VAL"]
01105> *%-----------------|-----------------------------------------------------|
01106>
01107> ***********************************
01108> *          ORGAWORLD FILE         *
01109> ***********************************
01110> *
01111> * SUB-AREA No.1
01112>
01113> CALIB STANDHYD      ID=[ 1  ], NHYD=["010"], DT=[2.5](min), AREA=[ 2.07 ](ha),
01114>                     XIMP=[0.84], TIMP=[0.84], DWF=[0.0](cms), LOSS=[2],
01115>                     SCS curve number CN=[81],
01116>                     Pervious   surfaces: IAper=[4.67](mm), SLPP=[1.0](%),
01117>                                           LGP=[20](m), MNP=[ 0.25 ], SCP=[0.0](mi
01118>                     Impervious surfaces: IAimp=[1.57](mm), SLPI=[0.52](%),
01119>                                           LGI=[204.72](m), MNI=[0.03 ], SCI=[0.0]
01120>                     RAINFALL=[ ,  ,  ,  , ](mm/hr) ,  END=-1
01121> *%-----------------|-----------------------------------------------------|
01122> *
01123> * SUB-AREA No.2
01124>
01125> CALIB STANDHYD      ID=[ 2  ], NHYD=["020"], DT=[2.5](min), AREA=[ 1.54 ](ha),
01126>                     XIMP=[0.92], TIMP=[0.92], DWF=[0.0](cms), LOSS=[2],
01127>                     SCS curve number CN=[81],
01128>                     Pervious   surfaces: IAper=[4.67](mm), SLPP=[1.0](%),
01129>                                           LGP=[5](m), MNP=[0.03], SCP=[0.0](min),
01130>                     Impervious surfaces: IAimp=[1.57](mm), SLPI=[0.50](%),
01131>                                           LGI=[244.34](m), MNI=[0.03 ], SCI=[0.0]
01132>                     RAINFALL=[ ,  ,  ,  , ](mm/hr) ,  END=-1
01133> *%-----------------|-----------------------------------------------------|
01134> *
01135> * SUB-AREA No.3
01136>
01137> CALIB STANDHYD      ID=[ 3 ], NHYD=["030"], DT=[2.5](min), AREA=[1.4](ha),
01138>                     XIMP=[0.97], TIMP=[0.97], DWF=[0.0](cms), LOSS=[2],
01139>                     SCS curve number CN=[81],
01140>                     Pervious   surfaces: IAper=[4.67](mm), SLPP=[1.0](%),
01141>                                           LGP=[5](m), MNP=[0.03], SCP=[0.0](min),
01142>                     Impervious surfaces: IAimp=[1.57](mm), SLPI=[ 0.51 ](%),
01143>                                           LGI=[ 225.63 ](m), MNI=[0.03], SCI=[0.0
01144>                     RAINFALL=[ ,  ,  ,  , ](mm/hr) ,  END=-1
01145> *%-----------------|-----------------------------------------------------|
01146> ADD HYD             IDsum=[4], NHYD=[ "040"], IDs to add=[1+2]
01147> *%-----------------|-----------------------------------------------------|
01148> ADD HYD             IDsum=[5], NHYD=[ "050"], IDs to add=[3+4]
01149> *%-----------------|-----------------------------------------------------|
01150> *
01151> * SUB-AREA No.4
01152>
01153> CALIB STANDHYD      ID=[6], NHYD=["060"], DT=[2.5](min), AREA=[0.89](ha),
01154>                     XIMP=[0.97], TIMP=[0.97], DWF=[0.0](cms), LOSS=[2],
01155>                     SCS curve number CN=[81],
01156>                     Pervious   surfaces: IAper=[4.67](mm), SLPP=[0.7](%),
01157>                                           LGP=[40](m), MNP=[0.25], SCP=[0.0](min)
01158>                     Impervious surfaces: IAimp=[1.57](mm), SLPI=[0.93](%),
01159>                                           LGI=[164.82](m), MNI=[0.03], SCI=[0.0](
01160>                     RAINFALL=[ ,  ,  ,  , ](mm/hr) ,  END=-1
01161> *%-----------------|-----------------------------------------------------|
01162> *
01163> * SUB-AREA No.5
01164>
01165> CALIB STANDHYD      ID=[ 7  ], NHYD=["070"], DT=[2.5](min), AREA=[2.66](ha),
01166>                     XIMP=[0.97], TIMP=[0.97], DWF=[0.0](cms), LOSS=[2],
01167>                     SCS curve number CN=[81],
01168>                     Pervious   surfaces: IAper=[4.67](mm), SLPP=[1.5](%),
01169>                                           LGP=[20](m), MNP=[0.25], SCP=[0.0](mi
01170>                     Impervious surfaces: IAimp=[1.57](mm), SLPI=[0.61](%),
01171>                                           LGI=[207.25](m), MNI=[0.03], SCI=[0.0](
01172>                     RAINFALL=[ ,  ,  ,  , ](mm/hr) ,  END=-1
01173> *%-----------------|-----------------------------------------------------|
01174> ADD HYD             IDsum=[8], NHYD=[ "080"], IDs to add=[6+7]
01175> *%-----------------|-----------------------------------------------------|
01176> ADD HYD             IDsum=[9], NHYD=[ "090"], IDs to add=[5+8]
01177> *%-----------------|-----------------------------------------------------|
01178>
01179> ROUTE RESERVOIR     IDout=[10],   NHYD=["POND"],  IDin=[9],
01180>                     RDT=[1.0](min),
01181>                              TABLE of ( OUTFLOW-STORAGE ) values
01182>                                        (cms) - (ha-m)
01183>                                [   0.000,  0.0000]
01184>                                [   0.008,  0.0656]
01185>                                [   0.017,  0.1311]
01186>                                [   0.093,  0.2831]
01187>                                [   0.233,  0.3971]
01188>                                [   0.337,  0.4731]
01189>                                [   0.465,  0.5491]
01190>                                [   0.531,  0.5871]
01191>                                [   0.593,  0.6251]
01192>                                [   0.654,  0.6631]
01193>                                [   0.797,  0.7391]
01194>                                [   0.950,  0.8274]
01195>                                [   1.304,  0.9157]
01196>                                [   1.880,  1.0040]
01197>                                [   2.577,  1.0923]
01198>                                [   -1  ,  -1    ]   (max twenty pts)
01199>
01200> ***********************************************
01201> *     Remaining Hawthorne Industrial Park     *
01202> ***********************************************
01203> *
01204> * SUB-AREA No.1
01205>
01206> CALIB STANDHYD      ID=[ 1 ], NHYD=["HIP01"], DT=[2.5](min), AREA=[19.9](ha),
01207>                     XIMP=[0.50], TIMP=[0.71], DWF=[0.0](cms), LOSS=[2],
01208>                     SCS curve number CN=[81],
01209>                     Pervious   surfaces: IAper=[4.67](mm), SLPP=[1.5](%),
01210>                                           LGP=[100.0](m), MNP=[0.25], SCP=[0.0](m
01211>                     Impervious surfaces: IAimp=[1.57](mm), SLPI=[0.6](%),
01212>                                           LGI=[580](m), MNI=[0.03], SCI=[0.0](min
01213>                     RAINFALL=[ ,  ,  ,  , ](mm/hr) ,  END=-1
01214> *%-----------------|-----------------------------------------------------|
01215> ADD HYD             IDsum=[ 2 ], NHYD=["HIP02"], IDs to add=[10+1]
01216> *%-----------------|-----------------------------------------------------|
01217> *
01218> * SUB-AREA No.2
01219>
01220> CALIB STANDHYD      ID=[ 3 ], NHYD=["HIP03"], DT=[2.5](min), AREA=[17](ha),
01221>                     XIMP=[0.50], TIMP=[0.71], DWF=[0.0](cms), LOSS=[2],
01222>                     SCS curve number CN=[81],
01223>                     Pervious   surfaces: IAper=[4.67](mm), SLPP=[1.5](%),
01224>                                           LGP=[100.0](m), MNP=[0.25], SCP=[0.0](m
01225>                     Impervious surfaces: IAimp=[1.57](mm), SLPI=[0.65](%),
01226>                                           LGI=[450](m), MNI=[0.03], SCI=[0.0](min
01227>                     RAINFALL=[ ,  ,  ,  , ](mm/hr) ,  END=-1
01228> *%-----------------|-----------------------------------------------------|
01229> *
01230> * SUB-AREA No.3
01231>
01232> CALIB STANDHYD      ID=[ 4 ], NHYD=["HIP04"], DT=[2.5](min), AREA=[15.6](ha),
01233>                     XIMP=[0.50], TIMP=[0.71], DWF=[0.0](cms), LOSS=[2],
01234>                     SCS curve number CN=[81],
01235>                     Pervious   surfaces: IAper=[4.67](mm), SLPP=[1.5](%),
01236>                                           LGP=[100.0](m), MNP=[0.25], SCP=[0.0](m
01237>                     Impervious surfaces: IAimp=[1.57](mm), SLPI=[0.5](%),
01238>                                           LGI=[600](m), MNI=[0.03], SCI=[0.0](min
01239>                     RAINFALL={ ,  ,  ,  , }(mm/hr) ,  END=-1
01240> *%-----------------|-----------------------------------------------------|
01241> ADD HYD             IDsum=[ 5 ], NHYD=["HIP05"], IDs to add=[3+4]
01242> *%-----------------|-----------------------------------------------------|
01243> ADD HYD             IDsum=[ 6 ], NHYD=["HIP06"], IDs to add=[5+2]
01244> *%-----------------|-----------------------------------------------------|
01245> *
01246> * SUB-AREA No.4
01247>
01248> CALIB STANDHYD      ID=[ 7 ], NHYD=["HIP07"], DT=[2.5](min), AREA=[12.2](ha),
01249>                     XIMP=[0.50], TIMP=[0.71], DWF=[0.0](cms), LOSS=[2],
01250>                     SCS curve number CN=[81],
01251>                     Pervious   surfaces: IAper=[4.67](mm), SLPP=[1.5](%),
01252>                                           LGP=[100.0](m), MNP=[0.25], SCP=[0.0](m
01253>                     Impervious surfaces: IAimp=[1.57](mm), SLPI=[0.7](%),
01254>                                           LGI=[210](m), MNI=[0.03], SCI=[0.0](min
01255>                     RAINFALL=[ ,  ,  ,  , ](mm/hr) ,  END=-1
01256>
01257> *%-----------------|-----------------------------------------------------|
01258> *
01259> *SUB-AREA No.5
01260>
01261> DESIGN NASHYD       ID=[ 8 ], NHYD=["Pond-Block"], DT=[2.5]min, AREA=[4.0](ha),
01262>                     DWF=[ 0 ](cms), CN/C={ 85 ], TP=[0.17]hrs,
01263>                     RAINFALL=[ ,  ,  ,  , ](mm/hr), END=-1
01264> *%-----------------|-----------------------------------------------------|
01265>
01266> ADD HYD             IDsum=[ 9 ], NHYD=["HIP08"], IDs to add=[6+7+8]
01267> *%-----------------|-----------------------------------------------------|
01268>
01269> ROUTE RESERVOIR     IDout=[ 10 ],   NHYD=["HIP-POND"],  IDin=[ 9 ],
01270>                     RDT=[1.0](min),
01271>                              TABLE of ( OUTFLOW-STORAGE ) values
01272>                                        (cms) - (ha-m)
01273>                                [   0.0  , 0.0    ]
01274>                                [   0.048, 0.0574 ]
01275>                                [   0.054, 0.2434 ]
01276>                                [   0.059, 0.5834 ]
01277>                                [   0.062, 0.8400 ]
01278>                                [   0.064, 1.1024 ]
01279>                                [   0.147, 1.3705 ]
01280>                                [   0.280, 1.6444 ]
01281>                                [   0.472, 1.9242 ]
01282>                                [   0.724, 2.2097 ]
01283>                                [   0.937, 2.5010 ]
01284>                                [   1.262, 2.7981 ]
01285>                                [   1.404, 3.1009 ]
01286>                                [   1.532, 3.4096 ]
01287>                                [   1.650, 3.7240 ]
01288>                                [   2.409, 4.0442 ]
01289>                                [   3.689, 4.3702 ]
01290>                                [   -1  ,  -1    ]   (max twenty pts)
01291>
01292> *%-----------------|-----------------------------------------------------|
01293> *
01294> *SUB-AREA No. 6
01295>
01296> DESIGN NASHYD       ID = [1], NHYD=["A3"], DT=[2.5]min, AREA=[2.7](ha),
01297>                     DWF=[0](cms), CNC=[76], TP=[0.80]hrs,
01298>                     RAINFALL=[ ,  ,  ,  , ](mm/hr), END=-1
01299> *%-----------------|-----------------------------------------------------|
01300>
01301> ADD HYD             IDsum=[2], NHYD=["Ultimate"], IDs to add=[10+1]
01302> *%-----------------|-----------------------------------------------------|
01303>
01304> ************************************************************
01305> *        CALCULATION OF 3HR - 1:100 YEAR STORM EVENT       *
01306> ************************************************************
01307>
01308> START               TZERO=[0.0],  METOUT=[2],  NSTORM=[0],  NRUN=[0]
01309> *%                   [  ] <--storm filename, one per line for NSTORM time
01310> *%-----------------|-----------------------------------------------------|
01311> CHICAGO STORM       IUNITS=[2],  TD=[3.0](hrs), TPRAT=[0.333],  CSDT=[10.0](min)
01312>                     ICASEcs=[1],
01313>                     A=[1735.688],  B=[6.014], and C=[0.820],
01314> *%-----------------|-----------------------------------------------------|
01315> DEFAULT VALUES      ICASEdef=[1],  read and print values
01316>                     DEFVAL_FILENAME=[V:\22973.DU\ENG\SWMHYMO\"ORGA.VAL"]
01317> *%-----------------|-----------------------------------------------------|
01318>
01319> ***********************************
01320> *          ORGAWORLD FILE         *
01321> ***********************************
01322> *
01323> * SUB-AREA No.1
01324>
01325> CALIB STANDHYD      ID=[ 1  ], NHYD=["010"], DT=[2.5](min), AREA=[ 2.07 ](ha),
01326>                     XIMP=[0.84], TIMP=[0.84], DWF=[0.0](cms), LOSS=[2],
01327>                     SCS curve number CN=[81],
01328>                     Pervious   surfaces: IAper=[4.67](mm), SLPP=[1.0](%),
01329>                                           LGP=[20](m), MNP=[ 0.25 ], SCP=[0.0](mi
01330>                     Impervious surfaces: IAimp=[1.57](mm), SLPI=[0.52](%),
01331>                                           LGI=[204.72](m), MNI=[0.03 ], SCI=[0.0]
01332>                     RAINFALL=[ ,  ,  ,  , ](mm/hr) ,  END=-1
01333> *%-----------------|-----------------------------------------------------|
01334> *
01335> * SUB-AREA No.2
01336>
01337> CALIB STANDHYD      ID=[ 2  ], NHYD=["020"], DT=[2.5](min), AREA=[ 1.54 ](ha),
01338>                     XIMP=[0.92], TIMP=[0.92], DWF=[0.0](cms), LOSS=[2],
01339>                     SCS curve number CN=[81],
01340>                     Pervious   surfaces: IAper=[4.67](mm), SLPP=[1.0](%),
01341>                                           LGP=[5](m), MNP=[0.03], SCP=[0.0](min),
01342>                     Impervious surfaces: IAimp=[1.57](mm), SLPI=[0.50](%),
01343>                                           LGI=[244.34](m), MNI=[0.03 ], SCI=[0.0]
01344>                     RAINFALL=[ ,  ,  ,  , ](mm/hr) ,  END=-1
01345> *%-----------------|-----------------------------------------------------|
01346> *
01347> * SUB-AREA No.3
01348>
01349> CALIB STANDHYD      ID=[ 3 ], NHYD=["030"], DT=[2.5](min), AREA=[1.4](ha),
01350>                     XIMP=[0.97], TIMP=[0.97], DWF=[0.0](cms), LOSS=[2],
```

```
01351>                      SCS curve number CN=[81],
01352>                      Pervious   surfaces: IAper=[4.67](mm), SLPP=[1.0](%),
01353>                                           LGP=[5](m), MNP=[0.03], SCP=[0.0](min),
01354>                      Impervious surfaces: IAimp=[1.57](mm), SLPI=[ 0.51 ](%),
01355>                                           LGI=[ 225.63 ](m), MNI=[0.03], SCI=[0.0
01356>                      RAINFALL=[ ,   ,   ,   , ](mm/hr) ,  END=-1
01357> *%-----------------|-------------------------------------------------------|
01358> ADD HYD              IDsum=[4], NHYD=[ "040"], IDs to add=[1+2]
01359> *%-----------------|-------------------------------------------------------|
01360> ADD HYD              IDsum=[5], NHYD=[ "050"], IDs to add=[3+4]
01361> *%-----------------|-------------------------------------------------------|
01362> *
01363> * SUB-AREA No.4
01364>
01365> CALIB STANDHYD       ID=[6], NHYD=["060"], DT=[2.5](min), AREA=[0.89](ha),
01366>                      XIMP=[0.97], TIMP=[0.97], DWF=[0.0](cms), LOSS=[2],
01367>                      SCS curve number CN=[81],
01368>                      Pervious   surfaces: IAper=[4.67](mm), SLPP=[0.7](%),
01369>                                           LGP=[40](m), MNP=[0.25], SCP=[0.0](min)
01370>                      Impervious surfaces: IAimp=[1.57](mm), SLPI=[0.93](%),
01371>                                           LGI=[164.82](m), MNI=[0.03], SCI=[0.0](
01372>                      RAINFALL=[ ,   ,   ,   , ](mm/hr) ,  END=-1
01373> *%-----------------|-------------------------------------------------------|
01374> *
01375> * SUB-AREA No.5
01376>
01377> CALIB STANDHYD       ID=[ 7  ], NHYD=["070"], DT=[2.5](min), AREA=[2.66](ha),
01378>                      XIMP=[0.97], TIMP=[0.97], DWF=[0.0](cms), LOSS=[2],
01379>                      SCS curve number CN=[81],
01380>                      Pervious   surfaces: IAper=[4.67](mm), SLPP=[1.5](%),
01381>                                           LGP=[20.0](m), MNP=[0.25], SCP=[0.0](mi
01382>                      Impervious surfaces: IAimp=[1.57](mm), SLPI=[0.61](%),
01383>                                           LGI=[207.25](m), MNI=[0.03], SCI=[0.0](
01384>                      RAINFALL=[ ,   ,   ,   , ](mm/hr) ,  END=-1
01385> *%-----------------|-------------------------------------------------------|
01386> ADD HYD              IDsum=[8], NHYD=[ "080"], IDs to add=[6+7]
01387> *%-----------------|-------------------------------------------------------|
01388> ADD HYD              IDsum=[9], NHYD=[ "090"], IDs to add=[5+8]
01389> *%-----------------|-------------------------------------------------------|
01390>
01391> ROUTE RESERVOIR      IDout=[10],   NHYD=["POND"],  IDin=[9],
01392>                      RDT=[1.0](min),
01393>                            TABLE of ( OUTFLOW-STORAGE ) values
01394>                                      (cms) - (ha-m)
01395>                                  [   0.000,  0.0000]
01396>                                  [   0.008,  0.0656]
01397>                                  [   0.017,  0.1311]
01398>                                  [   0.093,  0.2831]
01399>                                  [   0.233,  0.3971]
01400>                                  [   0.337,  0.4731]
01401>                                  [   0.465,  0.5491]
01402>                                  [   0.531,  0.5871]
01403>                                  [   0.593,  0.6251]
01404>                                  [   0.654,  0.6631]
01405>                                  [   0.797,  0.7391]
01406>                                  [   0.950,  0.8274]
01407>                                  [   1.304,  0.9157]
01408>                                  [   1.880,  1.0040]
01409>                                  [   2.577,  1.0923]
01410>                                  [   -1    ,  -1    ]   (max twenty pts)
01411>
01412> ************************************************
01413> *     Remaining Hawthorne Industrial Park      *
01414> ************************************************
01415> *
01416> * SUB-AREA No.1
01417>
01418> CALIB STANDHYD       ID=[ 1 ], NHYD=["HIP01"], DT=[2.5](min), AREA=[19.9](ha),
01419>                      XIMP=[0.50], TIMP=[0.71], DWF=[0.0](cms), LOSS=[2],
01420>                      SCS curve number CN=[81],
01421>                      Pervious   surfaces: IAper=[4.67](mm), SLPP=[1.5](%),
01422>                                           LGP=[100.0](m), MNP=[0.25], SCP=[0.0](m
01423>                      Impervious surfaces: IAimp=[1.57](mm), SLPI=[0.6](%),
01424>                                           LGI=[580](m), MNI=[0.03], SCI=[0.0](min
01425>                      RAINFALL=[ ,   ,   ,   , ](mm/hr) ,  END=-1
01426> *%-----------------|-------------------------------------------------------|
01427> ADD HYD              IDsum=[ 2 ], NHYD=["HIP02"], IDs to add=[10+1]
01428> *%-----------------|-------------------------------------------------------|
01429> *
01430> * SUB-AREA No.2
01431>
01432> CALIB STANDHYD       ID=[ 3 ], NHYD=["HIP03"], DT=[2.5](min), AREA=[17](ha),
01433>                      XIMP=[0.50], TIMP=[0.71], DWF=[0.0](cms), LOSS=[2],
01434>                      SCS curve number CN=[81],
01435>                      Pervious   surfaces: IAper=[4.67](mm), SLPP=[1.5](%),
01436>                                           LGP=[100.0](m), MNP=[0.25], SCP=[0.0](m
01437>                      Impervious surfaces: IAimp=[1.57](mm), SLPI=[0.65](%),
01438>                                           LGI=[450](m), MNI=[0.03], SCI=[0.0](min
01439>                      RAINFALL=[ ,   ,   ,   , ](mm/hr) ,  END=-1
01440> *%-----------------|-------------------------------------------------------|
01441> *
01442> * SUB-AREA No.3
01443>
01444> CALIB STANDHYD       ID=[ 4 ], NHYD=["HIP04"], DT=[2.5](min), AREA=[15.6](ha),
01445>                      XIMP=[0.50], TIMP=[0.71], DWF=[0.0](cms), LOSS=[2],
01446>                      SCS curve number CN=[81],
01447>                      Pervious   surfaces: IAper=[4.67](mm), SLPP=[1.5](%),
01448>                                           LGP=[100.0](m), MNP=[0.25], SCP=[0.0](m
01449>                      Impervious surfaces: IAimp=[1.57](mm), SLPI=[0.5](%),
01450>                                           LGI=[600](m), MNI=[0.03], SCI=[0.0](min
01451>                      RAINFALL=[ ,   ,   ,   , ](mm/hr) ,  END=-1
01452> *%-----------------|-------------------------------------------------------|
01453> ADD HYD              IDsum=[ 5 ], NHYD=["HIP05"], IDs to add=[3+4]
01454> *%-----------------|-------------------------------------------------------|
01455> ADD HYD              IDsum=[ 6 ], NHYD=["HIP06"], IDs to add=[5+2]
01456> *%-----------------|-------------------------------------------------------|
01457> *
01458> * SUB-AREA No.4
01459>
01460> CALIB STANDHYD       ID=[ 7 ], NHYD=["HIP07"], DT=[2.5](min), AREA=[12.2](ha),
01461>                      XIMP=[0.50], TIMP=[0.71], DWF=[0.0](cms), LOSS=[2],
01462>                      SCS curve number CN=[81],
01463>                      Pervious   surfaces: IAper=[4.67](mm), SLPP=[1.5](%),
01464>                                           LGP=[100.0](m), MNP=[0.25], SCP=[0.0](m
01465>                      Impervious surfaces: IAimp=[1.57](mm), SLPI=[0.7](%),
01466>                                           LGI=[210](m), MNI=[0.03], SCI=[0.0](min
01467>                      RAINFALL=[ ,   ,   ,   , ](mm/hr) ,  END=-1
01468>
01469> *%-----------------|-------------------------------------------------------|
01470> *
01471> *SUB-AREA No.5
01472>
01473> DESIGN NASHYD        ID=[ 8 ], NHYD=["Pond-Block"], DT=[2.5]min, AREA=[4.0](ha),
01474>                      DWF=[ 0 ](cms), CN/C=[ 85 ], TP=[0.17]hrs,
01475>                      RAINFALL=[ ,   ,   ,   , ](mm/hr), END=-1
01476> *%-----------------|-------------------------------------------------------|
01477>
01478> ADD HYD              IDsum=[ 9 ], NHYD=["HIP08"], IDs to add=[6+7+8]
01479> *%-----------------|-------------------------------------------------------|
01480>
01481> ROUTE RESERVOIR      IDout=[ 10 ],   NHYD=["HIP-POND"],  IDin=[ 9 ],
01482>                      RDT=[1.0](min),
01483>                            TABLE of ( OUTFLOW-STORAGE ) values
01484>                                      (cms) - (ha-m)
01485>                                  [   0.0  , 0.0    ]
01486>                                  [   0.048, 0.0574 ]
01487>                                  [   0.054, 0.2434 ]
01488>                                  [   0.059, 0.5834 ]
01489>                                  [   0.062, 0.8400 ]
01490>                                  [   0.064, 1.1024 ]
01491>                                  [   0.147, 1.3705 ]
01492>                                  [   0.280, 1.6444 ]
01493>                                  [   0.472, 1.9242 ]
01494>                                  [   0.724, 2.2097 ]
01495>                                  [   0.937, 2.5010 ]
01496>                                  [   1.262, 2.7981 ]
01497>                                  [   1.404, 3.1009 ]
01498>                                  [   1.532, 3.4096 ]
01499>                                  [   1.650, 3.7240 ]
01500>                                  [   2.409, 4.0442 ]
01501>                                  [   3.689, 4.3702 ]
01502>                                  [   -1  ,  -1    ]   (max twenty pts)
01503>
01504> *%-----------------|-------------------------------------------------------|
01505> *
01506> *SUB-AREA No. 6
01507>
01508> DESIGN NASHYD        ID = [1], NHYD=["A3"], DT=[2.5]min, AREA=[2.7](ha),
01509>                      DWF=[0](cms), CNC=[76], TP=[0.80]hrs,
01510>                      RAINFALL=[ ,   ,   ,   , ](mm/hr), END=-1
01511> *%-----------------|-------------------------------------------------------|
01512>
01513> ADD HYD              IDsum=[2], NHYD=["Ultimate"], IDs to add=[10+1]
01514> *%-----------------|-------------------------------------------------------|
01515>
01516>
01517>
01518>
01519> FINISH
```

```
00001> ==============================================================================
00002>
00003> SSSSS  W   W  M   M  H   H  Y   Y  M   M   OOO        999    999  =========
00004> S      W W W  MM MM  H   H   Y Y   MM MM  O   O      9   9  9   9
00005> SSSSS  W W W  M M M  HHHHH    Y    M M M  O   O  ##  9   9  9   9 Ver. 4.02
00006>     S   W W   M   M  H   H    Y    M   M  O   O      9999   9999 July 1999
00007> SSSSS    W W   M   M  H   H    Y    M   M   OOO           9      9 =========
00008>                                                      9   9  9   9 # 4418403
00009>       StormWater Management HYdrologic Model          999    999  =========
00010>
00011> ******************************************************************************
00012> ************************** SWMHYMO-99 Ver/4.02 ******************************
00013> *******  A single event and continuous hydrologic simulation model  *******
00014> *******     based on the principles of HYMO and its successors       *******
00015> *******                OTTHYMO-83 and OTTHYMO-89.                    *******
00016> ******************************************************************************
00017> ******* Distributed by:  J.F. Sabourin and Associates Inc.           *******
00018> *******                  Ottawa,  Ontario: (613) 727-5199            *******
00019> *******                  Gatineau, Quebec: (819) 243-6858            *******
00020> *******                  E-Mail: swmhymo@jfsa.Com                    *******
00021> ******************************************************************************
00022>
00023> ++++++++++++++++++++++++++++++++++++++++++++++++++++++++++++++++++++++++++++
00024> +++++++ Licensed user: J. L. Richards & Associates Limited          +++++++
00025> +++++++                Ottawa              SERIAL#:4418403          +++++++
00026> ++++++++++++++++++++++++++++++++++++++++++++++++++++++++++++++++++++++++++++
00027>
00028> ******************************************************************************
00029> *******            ++++++ PROGRAM ARRAY DIMENSIONS ++++++             *******
00030> *******            Maximum value for ID numbers  :     10            *******
00031> *******            Max. number of rainfall points:  15000            *******
00032> *******            Max. number of flow points    :  15000            *******
00033> ******************************************************************************
00034>
00035>
00036> ********************   D E T A I L E D   O U T P U T   ********************
00037> ******************************************************************************
00038> *       DATE: 2009-05-15     TIME: 08:45:21     RUN COUNTER: 000198       *
00039> ******************************************************************************
00040> * Input   filename: V:\20983.DU\ENG\FINALS~1\SWMHYM~1\SWM-ALL.dat          *
00041> * Output  filename: V:\20983.DU\ENG\FINALS~1\SWMHYM~1\SWM-ALL.out          *
00042> * Summary filename: V:\20983.DU\ENG\FINALS~1\SWMHYM~1\SWM-ALL.sum          *
00043> * User comments:                                                           *
00044> * 1:_____________________________________________________________________*
00045> * 2:_____________________________________________________________________*
00046> * 3:_____________________________________________________________________*
00047> ******************************************************************************
00048>
00049> ------------------------------------------------------------------------------
00050> 001:0001-----------------------------------------------------------------------
00051> *#****************************************************************************
00052> *#  Project Name : Hawthorne Industrial Park        Project Number:    [20983] *
00053> *#  Date         : January, 2009                                             *
00054> *#  Revised      : N/A                                                       *
00055> *#  Developed by : Mark Buchanan, E.I.T.                                     *
00056> *#  Reviewed by  : Guy Forget, P.Eng.                                        *
00057> *#  Company      : J.L. Richards & Associates Limited                        *
00058> *#  License #    : 4418403                                                   *
00059> *#****************************************************************************
00060> *
00061> *
00062> *#*************************************************************
00063> *#  FILENAME:  V:\20983.DU\ENG\SWMHYMO\20983PST.DAT            *
00064> *#  FILE DEVELOPED FOR SITE PLAN APPLICATION AND DETAILED DESIGN *
00065> *#   OF A FACILITY ASSOCIATED WITH THE OTTAWA COMPOSTING SITE    *
00066> *#*************************************************************
00067> *
00068> ******************************************************************************
00069> *          SWMHYMO FILE DEVELOPED TO INVESTIGATE FLOOD FLOWS OF THE          *
00070> *   PROPOSED COMPOSTING SITE UNDER POST-DEVELOPMENT UNCONTROLLED CONDITIONS  *
00071> ******************************************************************************
00072> ***********************************************************
00073> * HYDROLOGICAL ANALYSIS UNDER A 4 HR-25 MM STORM AND  *
00074> * FOR DESIGN STORMS OF 1:2, 5, 10, 25, 50, AND 100 YR *
00075> ***********************************************************
00076> ****************************************************************
00077> *        POST-DEVELOPMENT UNCONTROLLED CONDITIONS              *
00078> ****************************************************************
00079> ****************************************************************
00080> *            CALCULATION OF 4 HR 25 MM STORM EVENT             *
00081> ****************************************************************
00082> --------------------
00083> | START            |  Project  dir.: V:\20983.DU\ENG\FINALS~1\SWMHYM~1\
00084> --------------------  Rainfall dir.: V:\20983.DU\ENG\FINALS~1\SWMHYM~1\
00085>     TZERO =   .00 hrs on        0
00086>     METOUT=   2 (output = METRIC)
00087>     NRUN  = 001
00088>     NSTORM=   0
00089> ------------------------------------------------------------------------------
00090> 001:0002-----------------------------------------------------------------------
00091> ---------------------
00092> | READ STORM        |    Filename: V:\20983.DU\ENG\FINALS~1\SWMHYM~1\4HR25-
00093> | Ptotal=  25.00 mm|    Comments: 4hr-15 min 25 MM STORM EVENT (CHICAGO DI
00094> ---------------------
00095>                 TIME    RAIN |  TIME    RAIN |  TIME    RAIN |  TIME    RAIN
00096>                 hrs   mm/hr |   hrs   mm/hr |   hrs   mm/hr |   hrs   mm/hr
00097>                 .25   1.777 |  1.25  45.631 |  2.25   3.138 |  3.25   1.675
00098>                 .50   2.357 |  1.50  11.911 |  2.50   2.555 |  3.50   1.509
00099>                 .75   3.618 |  1.75   6.051 |  2.75   2.165 |  3.75   1.376
00100>                1.00   8.975 |  2.00   4.108 |  3.00   1.885 |  4.00   1.266
00101>
00102> ------------------------------------------------------------------------------
00103> 001:0003-----------------------------------------------------------------------
00104> ---------------------
00105> | DEFAULT VALUES    |  Filename: V:\20983.DU\ENG\FINALS~1\SWMHYM~1\ORGA.VAL
00106> ---------------------  ICASEdv = 1 (read and print data)
00107>       FileTitle= ------ ENTER YOUR COMMENTS ON THIS LINE AND THE NEXT ONE ---
00108>                  ------ PARAMETER VALUES MUST BE ENTERD AFTER COLUMN 60 ----
00109>       Horton's infiltration equation parameters:
00110>       [Fo= 50.00 mm/hr] [Fc= 7.50 mm/hr] [DCAY= 2.00 /hr] [F=  .00 mm]
00111>       Parameters for PERVIOUS surfaces in STANDHYD:
00112>       [IAper=   4.67 mm] [LGP=40.00 m] [MNP= .250]
00113>       Parameters for IMPERVIOUS surfaces in STANDHYD:
00114>       [IAimp=   1.57 mm] [CLI= 1.50]   [MNI= .035]
00115>       Parameters used in NASHYD:
00116>       [Ia=   4.67 mm] [N= 3.00]
00117> ------------------------------------------------------------------------------
00118> 001:0004-----------------------------------------------------------------------
00119> ************************************
00120> *          ORGAWORLD FILE          *
00121> ************************************
00122> *
00123> * SUB-AREA No.1
00124> ----------------------
00125> | CALIB STANDHYD     |   Area    (ha)=    2.07
00126> | 01:010     DT= 2.50 |   Total Imp(%)=   84.00   Dir. Conn.(%)=   84.00
00127> ----------------------
00128>                                  IMPERVIOUS    PERVIOUS (i)
00129>       Surface Area      (ha)=       1.74          .33
00130>       Dep. Storage      (mm)=       1.57         4.67
00131>       Average Slope      (%)=        .52         1.00
00132>       Length            (m)=     204.72        20.00
00133>       Mannings n          =        .030         .250
00134>
00135>       Max.eff.Inten.(mm/hr)=      45.63         5.37
00136>                  over (min)       10.00        30.00
00137>       Storage Coeff.  (min)=      10.80 (ii)   29.27 (ii)
00138>       Unit Hyd. Tpeak (min)=      10.00        30.00
00139>       Unit Hyd. peak  (cms)=        .11          .04
00140>                                                          *TOTALS*
00141>       PEAK FLOW       (cms)=        .16          .00        .158 (iii)
00142>       TIME TO PEAK    (hrs)=       1.29         1.75       1.292
00143>       RUNOFF VOLUME    (mm)=      23.43         5.17      20.508
00144>       TOTAL RAINFALL   (mm)=      25.00        25.00      24.999
00145>       RUNOFF COEFFICIENT  =        .94          .21        .820
00146>
00147>         (i) CN PROCEDURE SELECTED FOR PERVIOUS LOSSES:
00148>             CN* =  81.0    Ia = Dep. Storage  (Above)
00149>        (ii) TIME STEP (DT) SHOULD BE SMALLER OR EQUAL
00150>             THAN THE STORAGE COEFFICIENT.
00151>       (iii) PEAK FLOW DOES NOT INCLUDE BASEFLOW IF ANY.
00152>
00153> ------------------------------------------------------------------------------
00154> 001:0005-----------------------------------------------------------------------
00155> *
00156> * SUB-AREA No.2
00157> ----------------------
00158> | CALIB STANDHYD     |   Area    (ha)=    1.54
00159> | 02:020     DT= 2.50 |   Total Imp(%)=   92.00   Dir. Conn.(%)=   92.00
00160> ----------------------
00161>                                  IMPERVIOUS    PERVIOUS (i)
00162>       Surface Area      (ha)=       1.42          .12
00163>       Dep. Storage      (mm)=       1.57         4.67
00164>       Average Slope      (%)=        .50         1.00
00165>       Length            (m)=     244.34         5.00
00166>       Mannings n          =        .030         .030
00167>
00168>       Max.eff.Inten.(mm/hr)=      45.63         7.24
00169>                  over (min)       12.50        15.00
00170>       Storage Coeff.  (min)=      12.15 (ii)   14.15 (ii)
00171>       Unit Hyd. Tpeak (min)=      12.50        15.00
00172>       Unit Hyd. peak  (cms)=        .09          .08
00173>                                                          *TOTALS*
00174>       PEAK FLOW       (cms)=        .12          .00        .121 (iii)
00175>       TIME TO PEAK    (hrs)=       1.33         1.46       1.333
00176>       RUNOFF VOLUME    (mm)=      23.43         5.17      21.969
00177>       TOTAL RAINFALL   (mm)=      25.00        25.00      24.999
00178>       RUNOFF COEFFICIENT  =        .94          .21        .879
00179>
00180>         (i) CN PROCEDURE SELECTED FOR PERVIOUS LOSSES:
00181>             CN* =  81.0    Ia = Dep. Storage  (Above)
00182>        (ii) TIME STEP (DT) SHOULD BE SMALLER OR EQUAL
00183>             THAN THE STORAGE COEFFICIENT.
00184>       (iii) PEAK FLOW DOES NOT INCLUDE BASEFLOW IF ANY.
00185>
00186> ------------------------------------------------------------------------------
00187> 001:0006-----------------------------------------------------------------------
00188> *
00189> * SUB-AREA No.3
00190> ----------------------
00191> | CALIB STANDHYD     |   Area    (ha)=    1.40
00192> | 03:030     DT= 2.50 |   Total Imp(%)=   97.00   Dir. Conn.(%)=   97.00
00193> ----------------------
00194>                                  IMPERVIOUS    PERVIOUS (i)
00195>       Surface Area      (ha)=       1.36          .04
00196>       Dep. Storage      (mm)=       1.57         4.67
00197>       Average Slope      (%)=        .51         1.00
00198>       Length            (m)=     225.63         5.00
00199>       Mannings n          =        .030         .030
00200>
00201>       Max.eff.Inten.(mm/hr)=      45.63         7.97
00202>                  over (min)       12.50        12.50
00203>       Storage Coeff.  (min)=      11.52 (ii)   13.44 (ii)
00204>       Unit Hyd. Tpeak (min)=      12.50        12.50
00205>       Unit Hyd. peak  (cms)=        .10          .09
00206>                                                          *TOTALS*
00207>       PEAK FLOW       (cms)=        .12          .00        .118 (iii)
00208>       TIME TO PEAK    (hrs)=       1.33         1.42       1.333
00209>       RUNOFF VOLUME    (mm)=      23.43         5.17      22.881
00210>       TOTAL RAINFALL   (mm)=      25.00        25.00      24.999
00211>       RUNOFF COEFFICIENT  =        .94          .21        .915
00212>
00213>         (i) CN PROCEDURE SELECTED FOR PERVIOUS LOSSES:
00214>             CN* =  81.0    Ia = Dep. Storage  (Above)
00215>        (ii) TIME STEP (DT) SHOULD BE SMALLER OR EQUAL
00216>             THAN THE STORAGE COEFFICIENT.
00217>       (iii) PEAK FLOW DOES NOT INCLUDE BASEFLOW IF ANY.
00218>
00219> ------------------------------------------------------------------------------
00220> 001:0007-----------------------------------------------------------------------
00221> --------------------
00222> | ADD HYD (040   ) | ID: NHYD     AREA     QPEAK   TPEAK   R.V.    DWF
00223> --------------------                (ha)     (cms)   (hrs)   (mm)    (cms)
00224>                      ID1 01:010    2.07     .158    1.29   20.51    .000
00225>                     +ID2 02:020    1.54     .121    1.33   21.97    .000
00226>                      ==================================================
00227>                      SUM 04:040    3.61     .278    1.33   21.13    .000
00228>
00229>    NOTE:  PEAK FLOWS DO NOT INCLUDE BASEFLOWS IF ANY.
00230>
00231> ------------------------------------------------------------------------------
00232> 001:0008-----------------------------------------------------------------------
00233> --------------------
00234> | ADD HYD (050   ) | ID: NHYD     AREA     QPEAK   TPEAK   R.V.    DWF
00235> --------------------                (ha)     (cms)   (hrs)   (mm)    (cms)
00236>                      ID1 03:030    1.40     .118    1.33   22.88    .000
00237>                     +ID2 04:040    3.61     .278    1.33   21.13    .000
00238>                      ==================================================
00239>                      SUM 05:050    5.01     .396    1.33   21.62    .000
00240>
00241>    NOTE:  PEAK FLOWS DO NOT INCLUDE BASEFLOWS IF ANY.
00242>
00243> ------------------------------------------------------------------------------
00244> 001:0009-----------------------------------------------------------------------
00245> *
00246> * SUB-AREA No.4
00247> ----------------------
00248> | CALIB STANDHYD     |   Area    (ha)=     .89
00249> | 06:060     DT= 2.50 |   Total Imp(%)=   97.00   Dir. Conn.(%)=   97.00
00250> ----------------------
00251>                                  IMPERVIOUS    PERVIOUS (i)
00252>       Surface Area      (ha)=        .86          .03
00253>       Dep. Storage      (mm)=       1.57         4.67
00254>       Average Slope      (%)=        .93          .70
00255>       Length            (m)=     164.82        40.00
00256>       Mannings n          =        .030         .250
00257>
00258>       Max.eff.Inten.(mm/hr)=      45.63         4.42
00259>                  over (min)        7.50        42.50
00260>       Storage Coeff.  (min)=       7.97 (ii)   41.62 (ii)
00261>       Unit Hyd. Tpeak (min)=       7.50        42.50
00262>       Unit Hyd. peak  (cms)=        .14          .03
00263>                                                          *TOTALS*
00264>       PEAK FLOW       (cms)=        .09          .00        .089 (iii)
00265>       TIME TO PEAK    (hrs)=       1.25         2.00       1.250
00266>       RUNOFF VOLUME    (mm)=      23.43         5.17      22.882
00267>       TOTAL RAINFALL   (mm)=      25.00        25.00      24.999
00268>       RUNOFF COEFFICIENT  =        .94          .21        .915
00269>
00270>         (i) CN PROCEDURE SELECTED FOR PERVIOUS LOSSES:
```

```
00271>            CN* =  81.0    Ia = Dep. Storage  (Above)
00272>       (ii) TIME STEP (DT) SHOULD BE SMALLER OR EQUAL
00273>            THAN THE STORAGE COEFFICIENT.
00274>      (iii) PEAK FLOW DOES NOT INCLUDE BASEFLOW IF ANY.
00275>
00276> ---------------------------------------------------------------------------
00277> 001:0010-------------------------------------------------------------------
00278> *
00279> * SUB-AREA No.5
00280> ----------------------
00281> | CALIB STANDHYD     |   Area     (ha)=    2.66
00282> | 07:070     DT= 2.50 |   Total Imp(%)=   97.00   Dir. Conn.(%)=   97.00
00283> ----------------------
00284>                              IMPERVIOUS    PERVIOUS (i)
00285>      Surface Area      (ha)=       2.58          .08
00286>      Dep. Storage      (mm)=       1.57         4.67
00287>      Average Slope      (%)=        .61         1.50
00288>      Length             (m)=     207.25        20.00
00289>      Mannings n            =       .030         .250
00290>
00291>      Max.eff.Inten.(mm/hr)=      45.63         5.66
00292>                 over (min)       10.00        27.50
00293>      Storage Coeff.  (min)=      10.37 (ii)   26.38 (ii)
00294>      Unit Hyd. Tpeak (min)=      10.00        27.50
00295>      Unit Hyd. peak  (cms)=        .11          .04
00296>                                                          *TOTALS*
00297>      PEAK FLOW       (cms)=        .24          .00          .238 (iii)
00298>      TIME TO PEAK    (hrs)=       1.29         1.67         1.292
00299>      RUNOFF VOLUME    (mm)=      23.43         5.17        22.882
00300>      TOTAL RAINFALL   (mm)=      25.00        25.00        24.999
00301>      RUNOFF COEFFICIENT   =        .94          .21          .915
00302>
00303>        (i) CN PROCEDURE SELECTED FOR PERVIOUS LOSSES:
00304>            CN* =  81.0    Ia = Dep. Storage  (Above)
00305>       (ii) TIME STEP (DT) SHOULD BE SMALLER OR EQUAL
00306>            THAN THE STORAGE COEFFICIENT.
00307>      (iii) PEAK FLOW DOES NOT INCLUDE BASEFLOW IF ANY.
00308>
00309> ---------------------------------------------------------------------------
00310> 001:0011-------------------------------------------------------------------
00311> --------------------
00312> | ADD HYD (080   ) | ID: NHYD     AREA     QPEAK   TPEAK   R.V.    DWF
00313> --------------------                (ha)     (cms)   (hrs)   (mm)   (cms)
00314>                    ID1 06:060       .89      .089    1.25  22.88    .000
00315>                   +ID2 07:070      2.66      .238    1.29  22.88    .000
00316>                    ==================================================
00317>                    SUM 08:080      3.55      .327    1.29  22.88    .000
00318>
00319>    NOTE:  PEAK FLOWS DO NOT INCLUDE BASEFLOWS IF ANY.
00320>
00321> ---------------------------------------------------------------------------
00322> 001:0012-------------------------------------------------------------------
00323> --------------------
00324> | ADD HYD (090   ) | ID: NHYD     AREA     QPEAK   TPEAK   R.V.    DWF
00325> --------------------                (ha)     (cms)   (hrs)   (mm)   (cms)
00326>                    ID1 05:050      5.01      .396    1.33  21.62    .000
00327>                   +ID2 08:080      3.55      .327    1.29  22.88    .000
00328>                    ==================================================
00329>                    SUM 09:090      8.56      .716    1.29  22.14    .000
00330>
00331>    NOTE:  PEAK FLOWS DO NOT INCLUDE BASEFLOWS IF ANY.
00332>
00333> ---------------------------------------------------------------------------
00334> 001:0013-------------------------------------------------------------------
00335> --------------------
00336> | ROUTE RESERVOIR    |     Requested routing time step =  1.0 min.
00337> |  IN>09:(090   )    |
00338> | OUT<10:(POND  )    |     ========  OUTLFOW STORAGE TABLE  ========
00339> --------------------      OUTFLOW    STORAGE   |  OUTFLOW    STORAGE
00340>                              (cms)    (ha.m.)   |   (cms)    (ha.m.)
00341>                              .000   .0000E+00   |    .593   .6251E+00
00342>                              .008   .6560E-01   |    .654   .6631E+00
00343>                              .017   .1311E+00   |    .797   .7391E+00
00344>                              .093   .2831E+00   |    .950   .8274E+00
00345>                              .233   .3971E+00   |   1.304   .9157E+00
00346>                              .337   .4731E+00   |   1.880   .1004E+01
00347>                              .465   .5491E+00   |   2.577   .1092E+01
00348>                              .531   .5871E+00   |    .000   .0000E+00
00349>
00350>      ROUTING RESULTS            AREA     QPEAK     TPEAK       R.V.
00351>      ---------------            (ha)     (cms)     (hrs)       (mm)
00352>      INFLOW >09: (090   )      8.56      .716     1.292     22.143
00353>      OUTFLOW<10: (POND  )      8.56      .032     3.875     22.141
00354>
00355>                    PEAK   FLOW   REDUCTION [Qout/Qin](%)=    4.470
00356>                    TIME SHIFT OF PEAK FLOW        (min)=   155.00
00357>                    MAXIMUM  STORAGE   USED       (ha.m.)=.1611E+00
00358>
00359> ---------------------------------------------------------------------------
00360> 001:0014-------------------------------------------------------------------
00361> ********************************************
00362> *     Remaining Hawthorne Industrial Park    *
00363> ********************************************
00364> *
00365> * SUB-AREA No.1
00366> ----------------------
00367> | CALIB STANDHYD     |   Area     (ha)=   19.90
00368> | 01:HIP01  DT= 2.50 |   Total Imp(%)=   71.00   Dir. Conn.(%)=   50.00
00369> ----------------------
00370>                              IMPERVIOUS    PERVIOUS (i)
00371>      Surface Area      (ha)=      14.13         5.77
00372>      Dep. Storage      (mm)=       1.57         4.67
00373>      Average Slope      (%)=        .60         1.50
00374>      Length             (m)=     580.00       100.00
00375>      Mannings n            =       .030         .250
00376>
00377>      Max.eff.Inten.(mm/hr)=      34.39        11.90
00378>                 over (min)       22.50        52.50
00379>      Storage Coeff.  (min)=      21.64 (ii)   52.88 (ii)
00380>      Unit Hyd. Tpeak (min)=      22.50        52.50
00381>      Unit Hyd. peak  (cms)=        .05          .02
00382>                                                          *TOTALS*
00383>      PEAK FLOW       (cms)=        .60          .11          .642 (iii)
00384>      TIME TO PEAK    (hrs)=       1.50         2.13         1.542
00385>      RUNOFF VOLUME    (mm)=      23.43         8.74        16.085
00386>      TOTAL RAINFALL   (mm)=      25.00        25.00        24.999
00387>      RUNOFF COEFFICIENT   =        .94          .35          .643
00388>
00389>        (i) CN PROCEDURE SELECTED FOR PERVIOUS LOSSES:
00390>            CN* =  81.0    Ia = Dep. Storage  (Above)
00391>       (ii) TIME STEP (DT) SHOULD BE SMALLER OR EQUAL
00392>            THAN THE STORAGE COEFFICIENT.
00393>      (iii) PEAK FLOW DOES NOT INCLUDE BASEFLOW IF ANY.
00394>
00395> ---------------------------------------------------------------------------
00396> 001:0015-------------------------------------------------------------------
00397> --------------------
00398> | ADD HYD (HIP02 ) | ID: NHYD     AREA     QPEAK   TPEAK   R.V.    DWF
00399> --------------------                (ha)     (cms)   (hrs)   (mm)   (cms)
00400>                    ID1 10:POND      8.56      .032    3.88  22.14    .000
00401>                   +ID2 01:HIP01    19.90      .642    1.54  16.08    .000
00402>                    ==================================================
00403>                    SUM 02:HIP02    28.46      .655    1.54  17.91    .000
00404>
00405>    NOTE:  PEAK FLOWS DO NOT INCLUDE BASEFLOWS IF ANY.
00406>
00407> ---------------------------------------------------------------------------
00408> 001:0016-------------------------------------------------------------------
00409> *
00410> * SUB-AREA No.2
00411> ----------------------
00412> | CALIB STANDHYD     |   Area     (ha)=   17.00
00413> | 03:HIP03  DT= 2.50 |   Total Imp(%)=   71.00   Dir. Conn.(%)=   50.00
00414> ----------------------
00415>                              IMPERVIOUS    PERVIOUS (i)
00416>      Surface Area      (ha)=      12.07         4.93
00417>      Dep. Storage      (mm)=       1.57         4.67
00418>      Average Slope      (%)=        .65         1.50
00419>      Length             (m)=     450.00       100.00
00420>      Mannings n            =       .030         .250
00421>
00422>      Max.eff.Inten.(mm/hr)=      40.81        12.73
00423>                 over (min)       17.50        47.50
00424>      Storage Coeff.  (min)=      16.94 (ii)   47.35 (ii)
00425>      Unit Hyd. Tpeak (min)=      17.50        47.50
00426>      Unit Hyd. peak  (cms)=        .07          .02
00427>                                                          *TOTALS*
00428>      PEAK FLOW       (cms)=        .60          .10          .625 (iii)
00429>      TIME TO PEAK    (hrs)=       1.42         2.00         1.458
00430>      RUNOFF VOLUME    (mm)=      23.43         8.74        16.085
00431>      TOTAL RAINFALL   (mm)=      25.00        25.00        24.999
00432>      RUNOFF COEFFICIENT   =        .94          .35          .643
00433>
00434>        (i) CN PROCEDURE SELECTED FOR PERVIOUS LOSSES:
00435>            CN* =  81.0    Ia = Dep. Storage  (Above)
00436>       (ii) TIME STEP (DT) SHOULD BE SMALLER OR EQUAL
00437>            THAN THE STORAGE COEFFICIENT.
00438>      (iii) PEAK FLOW DOES NOT INCLUDE BASEFLOW IF ANY.
00439>
00440> ---------------------------------------------------------------------------
00441> 001:0017-------------------------------------------------------------------
00442> *
00443> * SUB-AREA No.3
00444> ----------------------
00445> | CALIB STANDHYD     |   Area     (ha)=   15.60
00446> | 04:HIP04  DT= 2.50 |   Total Imp(%)=   71.00   Dir. Conn.(%)=   50.00
00447> ----------------------
00448>                              IMPERVIOUS    PERVIOUS (i)
00449>      Surface Area      (ha)=      11.08         4.52
00450>      Dep. Storage      (mm)=       1.57         4.67
00451>      Average Slope      (%)=        .50         1.50
00452>      Length             (m)=     600.00       100.00
00453>      Mannings n            =       .030         .250
00454>
00455>      Max.eff.Inten.(mm/hr)=      34.39        11.54
00456>                 over (min)       22.50        55.00
00457>      Storage Coeff.  (min)=      23.33 (ii)   54.95 (ii)
00458>      Unit Hyd. Tpeak (min)=      22.50        55.00
00459>      Unit Hyd. peak  (cms)=        .05          .02
00460>                                                          *TOTALS*
00461>      PEAK FLOW       (cms)=        .45          .08          .484 (iii)
00462>      TIME TO PEAK    (hrs)=       1.50         2.17         1.542
00463>      RUNOFF VOLUME    (mm)=      23.43         8.74        16.085
00464>      TOTAL RAINFALL   (mm)=      25.00        25.00        24.999
00465>      RUNOFF COEFFICIENT   =        .94          .35          .643
00466>
00467>        (i) CN PROCEDURE SELECTED FOR PERVIOUS LOSSES:
00468>            CN* =  81.0    Ia = Dep. Storage  (Above)
00469>       (ii) TIME STEP (DT) SHOULD BE SMALLER OR EQUAL
00470>            THAN THE STORAGE COEFFICIENT.
00471>      (iii) PEAK FLOW DOES NOT INCLUDE BASEFLOW IF ANY.
00472>
00473> ---------------------------------------------------------------------------
00474> 001:0018-------------------------------------------------------------------
00475> --------------------
00476> | ADD HYD (HIP05 ) | ID: NHYD     AREA     QPEAK   TPEAK   R.V.    DWF
00477> --------------------                (ha)     (cms)   (hrs)   (mm)   (cms)
00478>                    ID1 03:HIP03    17.00      .625    1.46  16.08    .000
00479>                   +ID2 04:HIP04    15.60      .484    1.54  16.08    .000
00480>                    ==================================================
00481>                    SUM 05:HIP05    32.60     1.091    1.46  16.08    .000
00482>
00483>    NOTE:  PEAK FLOWS DO NOT INCLUDE BASEFLOWS IF ANY.
00484>
00485> ---------------------------------------------------------------------------
00486> 001:0019-------------------------------------------------------------------
00487> --------------------
00488> | ADD HYD (HIP06 ) | ID: NHYD     AREA     QPEAK   TPEAK   R.V.    DWF
00489> --------------------                (ha)     (cms)   (hrs)   (mm)   (cms)
00490>                    ID1 05:HIP05    32.60     1.091    1.46  16.08    .000
00491>                   +ID2 02:HIP02    28.46      .655    1.54  17.91    .000
00492>                    ==================================================
00493>                    SUM 06:HIP06    61.06     1.740    1.50  16.93    .000
00494>
00495>    NOTE:  PEAK FLOWS DO NOT INCLUDE BASEFLOWS IF ANY.
00496>
00497> ---------------------------------------------------------------------------
00498> 001:0020-------------------------------------------------------------------
00499> *
00500> * SUB-AREA No.4
00501> ----------------------
00502> | CALIB STANDHYD     |   Area     (ha)=   12.20
00503> | 07:HIP07  DT= 2.50 |   Total Imp(%)=   71.00   Dir. Conn.(%)=   50.00
00504> ----------------------
00505>                              IMPERVIOUS    PERVIOUS (i)
00506>      Surface Area      (ha)=       8.66         3.54
00507>      Dep. Storage      (mm)=       1.57         4.67
00508>      Average Slope      (%)=        .70         1.50
00509>      Length             (m)=     210.00       100.00
00510>      Mannings n            =       .030         .250
00511>
00512>      Max.eff.Inten.(mm/hr)=      45.63        14.15
00513>                 over (min)       10.00        40.00
00514>      Storage Coeff.  (min)=      10.03 (ii)   39.18 (ii)
00515>      Unit Hyd. Tpeak (min)=      10.00        40.00
00516>      Unit Hyd. peak  (cms)=        .11          .03
00517>                                                          *TOTALS*
00518>      PEAK FLOW       (cms)=        .57          .08          .585 (iii)
00519>      TIME TO PEAK    (hrs)=       1.29         1.88         1.292
00520>      RUNOFF VOLUME    (mm)=      23.43         8.74        16.085
00521>      TOTAL RAINFALL   (mm)=      25.00        25.00        24.999
00522>      RUNOFF COEFFICIENT   =        .94          .35          .643
00523>
00524>        (i) CN PROCEDURE SELECTED FOR PERVIOUS LOSSES:
00525>            CN* =  81.0    Ia = Dep. Storage  (Above)
00526>       (ii) TIME STEP (DT) SHOULD BE SMALLER OR EQUAL
00527>            THAN THE STORAGE COEFFICIENT.
00528>      (iii) PEAK FLOW DOES NOT INCLUDE BASEFLOW IF ANY.
00529>
00530> ---------------------------------------------------------------------------
00531> 001:0021-------------------------------------------------------------------
00532> *
00533> *SUB-AREA No.5
00534> ----------------------
00535> | DESIGN NASHYD      |   Area     (ha)=    4.00   Curve Number   (CN)=85.00
00536> | 08:Pond-B DT= 2.50 |   Ia       (mm)=   4.670   # of Linear Res.(N)= 3.00
00537> ----------------------   U.H. Tp(hrs)=    .170
00538>
00539>      Unit Hyd Qpeak  (cms)=      .899
00540>
```

```
00541>      PEAK FLOW        (cms)=      .077 (i)
00542>      TIME TO PEAK     (hrs)=    1.375
00543>      RUNOFF VOLUME     (mm)=    6.343
00544>      TOTAL RAINFALL    (mm)=   24.999
00545>      RUNOFF COEFFICIENT   =     .254
00546>
00547>      (i) PEAK FLOW DOES NOT INCLUDE BASEFLOW IF ANY.
00548>
00549> ---------------------------------------------------------------------------
00550> 001:0022-------------------------------------------------------------------
00551> --------------------
00552> | ADD HYD (HIP08 ) | ID: NHYD     AREA     QPEAK   TPEAK   R.V.    DWF
00553> --------------------              (ha)     (cms)   (hrs)   (mm)   (cms)
00554>                     ID1 06:HIP06   61.06   1.740    1.50  16.93    .000
00555>                    +ID2 07:HIP07   12.20    .585    1.29  16.08    .000
00556>                    +ID3 08:Pond-B   4.00    .077    1.38   6.34    .000
00557>                     ==================================================
00558>                     SUM 09:HIP08   77.26   2.227    1.46  16.25    .000
00559>
00560>    NOTE:  PEAK FLOWS DO NOT INCLUDE BASEFLOWS IF ANY.
00561>
00562> ---------------------------------------------------------------------------
00563> 001:0023-------------------------------------------------------------------
00564> --------------------
00565> | ROUTE RESERVOIR    |     Requested routing time step =  1.0 min.
00566> |  IN>09:(HIP08 )    |
00567> | OUT<10:(HIP-PO)    |     ========  OUTLFOW STORAGE TABLE  ========
00568> --------------------       OUTFLOW    STORAGE   |  OUTFLOW    STORAGE
00569>                               (cms)    (ha.m.)   |   (cms)    (ha.m.)
00570>                               .000  .0000E+00    |    .724  .2210E+01
00571>                               .048  .5740E-01    |    .937  .2501E+01
00572>                               .054  .2434E+00    |   1.262  .2798E+01
00573>                               .059  .5834E+00    |   1.404  .3101E+01
00574>                               .062  .8400E+00    |   1.532  .3410E+01
00575>                               .064  .1102E+01    |   1.650  .3724E+01
00576>                               .147  .1370E+01    |   2.409  .4044E+01
00577>                               .280  .1644E+01    |   3.689  .4370E+01
00578>                               .472  .1924E+01    |    .000  .0000E+00
00579>
00580>      ROUTING RESULTS              AREA     QPEAK     TPEAK       R.V.
00581>      ---------------              (ha)     (cms)     (hrs)       (mm)
00582>      INFLOW >09: (HIP08 )       77.26     2.227     1.458     16.251
00583>      OUTFLOW<10: (HIP-PO)       77.26      .063     5.431     16.251
00584>
00585>                      PEAK   FLOW   REDUCTION [Qout/Qin](%)=    2.839
00586>                      TIME SHIFT OF PEAK FLOW         (min)=   238.33
00587>                      MAXIMUM  STORAGE   USED       (ha.m.)=-1.001E+01
00588>
00589> ---------------------------------------------------------------------------
00590> 001:0024-------------------------------------------------------------------
00591> *
00592> *SUB-AREA No. 6
00593> --------------------
00594> | DESIGN NASHYD      |   Area     (ha)=    2.70   Curve Number    (CN)=76.00
00595> | 01:A3     DT= 2.50 |   Ia       (mm)=   4.670   # of Linear Res.(N)= 3.00
00596> --------------------     U.H. Tp(hrs)=     .800
00597>
00598>      Unit Hyd Qpeak   (cms)=      .129
00599>
00600>      PEAK FLOW        (cms)=      .013 (i)
00601>      TIME TO PEAK     (hrs)=     2.292
00602>      RUNOFF VOLUME     (mm)=     4.110
00603>      TOTAL RAINFALL    (mm)=    24.999
00604>      RUNOFF COEFFICIENT   =      .164
00605>
00606>      (i) PEAK FLOW DOES NOT INCLUDE BASEFLOW IF ANY.
00607>
00608> ---------------------------------------------------------------------------
00609> 001:0025-------------------------------------------------------------------
00610> --------------------
00611> | ADD HYD (Ultima) | ID: NHYD     AREA     QPEAK   TPEAK   R.V.    DWF
00612> --------------------              (ha)     (cms)   (hrs)   (mm)   (cms)
00613>                     ID1 10:HIP-PO  77.26    .063    5.43  16.25    .000
00614>                    +ID2 01:A3       2.70    .013    2.29   4.11    .000
00615>                     ==================================================
00616>                     SUM 02:Ultima  79.96    .073    2.50  15.84    .000
00617>
00618>    NOTE:  PEAK FLOWS DO NOT INCLUDE BASEFLOWS IF ANY.
00619>
00620> ---------------------------------------------------------------------------
00621> 001:0026-------------------------------------------------------------------
00622> ***************************************************************
00623> *        CALCULATION OF 3HR - 1:2 YEAR STORM EVENT            *
00624> ***************************************************************
00625> --------------------
00626> | START              |  Project  dir.: V:\20983.DU\ENG\FINALS~1\SWMHYM~1\
00627> --------------------  Rainfall dir.: V:\20983.DU\ENG\FINALS~1\SWMHYM~1\
00628>     TZERO =   .00 hrs on        0
00629>     METOUT=   2 (output = METRIC)
00630>     NRUN  = 001
00631>     NSTORM=   0
00632> ---------------------------------------------------------------------------
00633> 001:0002-------------------------------------------------------------------
00634> --------------------
00635> | CHICAGO STORM      |     IDF curve parameters: A= 732.951
00636> | Ptotal= 31.86 mm   |                           B=   6.199
00637> --------------------                           C=    .810
00638>                              used in:   INTENSITY =  A / (t + B)^C
00639>
00640>                              Duration of storm  =  3.00 hrs
00641>                              Storm time step    = 10.00 min
00642>                              Time to peak ratio =   .33
00643>
00644>                 TIME    RAIN |  TIME    RAIN |  TIME    RAIN |  TIME    RAIN
00645>                  hrs   mm/hr |   hrs   mm/hr |   hrs   mm/hr |   hrs   mm/hr
00646>                  .17   2.815 |  1.00  76.805 |  1.83   5.095 |  2.67   2.684
00647>                  .33   3.498 |  1.17  24.079 |  2.00   4.291 |  2.83   2.463
00648>                  .50   4.687 |  1.33  12.364 |  2.17   3.718 |  3.00   2.279
00649>                  .67   7.305 |  1.50   8.324 |  2.33   3.288 |
00650>                  .83  18.209 |  1.67   6.303 |  2.50   2.953 |
00651>
00652> ---------------------------------------------------------------------------
00653> 001:0003-------------------------------------------------------------------
00654> --------------------
00655> | DEFAULT VALUES     |  Filename: V:\20983.DU\ENG\FINALS~1\SWMHYM~1\ORGA.VAL
00656> --------------------  ICASEdv = 1 (read and print data)
00657>      FileTitle= ------ ENTER YOUR COMMENTS ON THIS LINE AND THE NEXT ONE ---
00658>                 ------ PARAMETER VALUES MUST BE ENTERD AFTER COLUMN 60 ----
00659>      Horton's infiltration equation parameters:
00660>      [Fo= 50.00 mm/hr] [Fc= 7.50 mm/hr] [DCAY= 2.00 /hr] [F=  .00 mm]
00661>      Parameters for PERVIOUS surfaces in STANDHYD:
00662>      [IAper=   4.67 mm] [LGP=40.00 m] [MNP= .250]
00663>      Parameters for IMPERVIOUS surfaces in STANDHYD:
00664>      [IAimp=   1.57 mm] [CLI= 1.50]   [MNI= .035]
00665>      Parameters used in NASHYD:
00666>      [Ia=   4.67 mm] [N= 3.00]
00667> ---------------------------------------------------------------------------
00668> 001:0004-------------------------------------------------------------------
00669> ***********************************
00670> *          ORGAWORLD FILE         *
00671> ***********************************
00672> *
00673> * SUB-AREA No.1
00674> --------------------
00675> | CALIB STANDHYD     |   Area     (ha)=    2.07
00676> | 01:010    DT= 2.50 |   Total Imp(%)=   84.00   Dir. Conn.(%)=   84.00
00677> --------------------
00678>                                  IMPERVIOUS    PERVIOUS (i)
00679>      Surface Area     (ha)=        1.74          .33
00680>      Dep. Storage     (mm)=        1.57         4.67
00681>      Average Slope     (%)=         .52         1.00
00682>      Length            (m)=      204.72        20.00
00683>      Mannings n          =         .030         .250
00684>
00685>      Max.eff.Inten.(mm/hr)=       76.81        11.88
00686>                 over (min)        10.00        22.50
00687>      Storage Coeff.  (min)=         8.77 (ii)   22.21 (ii)
00688>      Unit Hyd. Tpeak (min)=        10.00        22.50
00689>      Unit Hyd. peak  (cms)=         .12          .05
00690>                                                          *TOTALS*
00691>      PEAK FLOW        (cms)=        .24          .01        .245 (iii)
00692>      TIME TO PEAK     (hrs)=       1.08         1.38       1.083
00693>      RUNOFF VOLUME     (mm)=      30.29         8.52      26.807
00694>      TOTAL RAINFALL    (mm)=      31.86        31.86      31.860
00695>      RUNOFF COEFFICIENT   =        .95          .27        .841
00696>
00697>        (i) CN PROCEDURE SELECTED FOR PERVIOUS LOSSES:
00698>            CN* =  81.0    Ia = Dep. Storage  (Above)
00699>       (ii) TIME STEP (DT) SHOULD BE SMALLER OR EQUAL
00700>            THAN THE STORAGE COEFFICIENT.
00701>      (iii) PEAK FLOW DOES NOT INCLUDE BASEFLOW IF ANY.
00702>
00703> ---------------------------------------------------------------------------
00704> 001:0005-------------------------------------------------------------------
00705> *
00706> * SUB-AREA No.2
00707> --------------------
00708> | CALIB STANDHYD     |   Area     (ha)=    1.54
00709> | 02:020    DT= 2.50 |   Total Imp(%)=   92.00   Dir. Conn.(%)=   92.00
00710> --------------------
00711>                                  IMPERVIOUS    PERVIOUS (i)
00712>      Surface Area     (ha)=        1.42          .12
00713>      Dep. Storage     (mm)=        1.57         4.67
00714>      Average Slope     (%)=         .50         1.00
00715>      Length            (m)=      244.34         5.00
00716>      Mannings n          =         .030         .030
00717>
00718>      Max.eff.Inten.(mm/hr)=       76.81        15.07
00719>                 over (min)        10.00        12.50
00720>      Storage Coeff.  (min)=         9.87 (ii)   11.36 (ii)
00721>      Unit Hyd. Tpeak (min)=        10.00        12.50
00722>      Unit Hyd. peak  (cms)=         .11          .10
00723>                                                          *TOTALS*
00724>      PEAK FLOW        (cms)=        .19          .00        .192 (iii)
00725>      TIME TO PEAK     (hrs)=       1.08         1.17       1.083
00726>      RUNOFF VOLUME     (mm)=      30.29         8.52      28.548
00727>      TOTAL RAINFALL    (mm)=      31.86        31.86      31.860
00728>      RUNOFF COEFFICIENT   =        .95          .27        .896
00729>
00730>        (i) CN PROCEDURE SELECTED FOR PERVIOUS LOSSES:
00731>            CN* =  81.0    Ia = Dep. Storage  (Above)
00732>       (ii) TIME STEP (DT) SHOULD BE SMALLER OR EQUAL
00733>            THAN THE STORAGE COEFFICIENT.
00734>      (iii) PEAK FLOW DOES NOT INCLUDE BASEFLOW IF ANY.
00735>
00736> ---------------------------------------------------------------------------
00737> 001:0006-------------------------------------------------------------------
00738> *
00739> * SUB-AREA No.3
00740> --------------------
00741> | CALIB STANDHYD     |   Area     (ha)=    1.40
00742> | 03:030    DT= 2.50 |   Total Imp(%)=   97.00   Dir. Conn.(%)=   97.00
00743> --------------------
00744>                                  IMPERVIOUS    PERVIOUS (i)
00745>      Surface Area     (ha)=        1.36          .04
00746>      Dep. Storage     (mm)=        1.57         4.67
00747>      Average Slope     (%)=         .51         1.00
00748>      Length            (m)=      225.63         5.00
00749>      Mannings n          =         .030         .030
00750>
00751>      Max.eff.Inten.(mm/hr)=       76.81        16.59
00752>                 over (min)        10.00        10.00
00753>      Storage Coeff.  (min)=         9.35 (ii)   10.79 (ii)
00754>      Unit Hyd. Tpeak (min)=        10.00        10.00
00755>      Unit Hyd. peak  (cms)=         .12          .11
00756>                                                          *TOTALS*
00757>      PEAK FLOW        (cms)=        .18          .00        .186 (iii)
00758>      TIME TO PEAK     (hrs)=       1.08         1.13       1.083
00759>      RUNOFF VOLUME     (mm)=      30.29         8.52      29.637
00760>      TOTAL RAINFALL    (mm)=      31.86        31.86      31.860
00761>      RUNOFF COEFFICIENT   =        .95          .27        .930
00762>
00763>        (i) CN PROCEDURE SELECTED FOR PERVIOUS LOSSES:
00764>            CN* =  81.0    Ia = Dep. Storage  (Above)
00765>       (ii) TIME STEP (DT) SHOULD BE SMALLER OR EQUAL
00766>            THAN THE STORAGE COEFFICIENT.
00767>      (iii) PEAK FLOW DOES NOT INCLUDE BASEFLOW IF ANY.
00768>
00769> ---------------------------------------------------------------------------
00770> 001:0007-------------------------------------------------------------------
00771> --------------------
00772> | ADD HYD (040   ) | ID: NHYD     AREA     QPEAK   TPEAK   R.V.    DWF
00773> --------------------              (ha)     (cms)   (hrs)   (mm)   (cms)
00774>                     ID1 01:010     2.07    .245    1.08  26.81    .000
00775>                    +ID2 02:020     1.54    .192    1.08  28.55    .000
00776>                     ==================================================
00777>                     SUM 04:040     3.61    .436    1.08  27.55    .000
00778>
00779>    NOTE:  PEAK FLOWS DO NOT INCLUDE BASEFLOWS IF ANY.
00780>
00781> ---------------------------------------------------------------------------
00782> 001:0008-------------------------------------------------------------------
00783> --------------------
00784> | ADD HYD (050   ) | ID: NHYD     AREA     QPEAK   TPEAK   R.V.    DWF
00785> --------------------              (ha)     (cms)   (hrs)   (mm)   (cms)
00786>                     ID1 03:030     1.40    .186    1.08  29.64    .000
00787>                    +ID2 04:040     3.61    .436    1.08  27.55    .000
00788>                     ==================================================
00789>                     SUM 05:050     5.01    .623    1.08  28.13    .000
00790>
00791>    NOTE:  PEAK FLOWS DO NOT INCLUDE BASEFLOWS IF ANY.
00792>
00793> ---------------------------------------------------------------------------
00794> 001:0009-------------------------------------------------------------------
00795> *
00796> * SUB-AREA No.4
00797> --------------------
00798> | CALIB STANDHYD     |   Area     (ha)=     .89
00799> | 06:060    DT= 2.50 |   Total Imp(%)=   97.00   Dir. Conn.(%)=   97.00
00800> --------------------
00801>                                  IMPERVIOUS    PERVIOUS (i)
00802>      Surface Area     (ha)=         .86          .03
00803>      Dep. Storage     (mm)=        1.57         4.67
00804>      Average Slope     (%)=         .93          .70
00805>      Length            (m)=      164.82        40.00
00806>      Mannings n          =         .030         .250
00807>
00808>      Max.eff.Inten.(mm/hr)=       76.81        10.24
00809>                 over (min)         7.50        30.00
00810>      Storage Coeff.  (min)=         6.47 (ii)   30.53 (ii)
```

```
00811>      Unit Hyd. Tpeak (min)=       7.50        30.00
00812>      Unit Hyd. peak  (cms)=        .16          .04
00813>                                                          *TOTALS*
00814>      PEAK FLOW       (cms)=        .14          .00         .139 (iii)
00815>      TIME TO PEAK    (hrs)=       1.04         1.54        1.042
00816>      RUNOFF VOLUME    (mm)=      30.29         8.52       29.637
00817>      TOTAL RAINFALL   (mm)=      31.86        31.86       31.860
00818>      RUNOFF COEFFICIENT   =        .95          .27         .930
00819>
00820>        (i) CN PROCEDURE SELECTED FOR PERVIOUS LOSSES:
00821>            CN* =  81.0    Ia = Dep. Storage  (Above)
00822>       (ii) TIME STEP (DT) SHOULD BE SMALLER OR EQUAL
00823>            THAN THE STORAGE COEFFICIENT.
00824>      (iii) PEAK FLOW DOES NOT INCLUDE BASEFLOW IF ANY.
00825>
00826> ----------------------------------------------------------------------
00827> 001:0010----------------------------------------------------------------
00828> *
00829> * SUB-AREA No.5
00830> ----------------------
00831> | CALIB STANDHYD     |   Area    (ha)=    2.66
00832> | 07:070     DT= 2.50 |   Total Imp(%)=   97.00   Dir. Conn.(%)=   97.00
00833> ----------------------
00834>                                  IMPERVIOUS    PERVIOUS (i)
00835>      Surface Area      (ha)=        2.58          .08
00836>      Dep. Storage      (mm)=        1.57         4.67
00837>      Average Slope      (%)=         .61         1.50
00838>      Length             (m)=      207.25        20.00
00839>      Mannings n          =         .030         .250
00840>
00841>      Max.eff.Inten.(mm/hr)=        76.81        12.71
00842>                 over (min)         7.50        20.00
00843>      Storage Coeff.  (min)=        8.42 (ii)   20.00 (ii)
00844>      Unit Hyd. Tpeak (min)=        7.50        20.00
00845>      Unit Hyd. peak  (cms)=         .14          .06
00846>                                                          *TOTALS*
00847>      PEAK FLOW       (cms)=         .38          .00         .379 (iii)
00848>      TIME TO PEAK    (hrs)=        1.04         1.33        1.042
00849>      RUNOFF VOLUME    (mm)=       30.29         8.52       29.637
00850>      TOTAL RAINFALL   (mm)=       31.86        31.86       31.860
00851>      RUNOFF COEFFICIENT   =         .95          .27         .930
00852>
00853>        (i) CN PROCEDURE SELECTED FOR PERVIOUS LOSSES:
00854>            CN* =  81.0    Ia = Dep. Storage  (Above)
00855>       (ii) TIME STEP (DT) SHOULD BE SMALLER OR EQUAL
00856>            THAN THE STORAGE COEFFICIENT.
00857>      (iii) PEAK FLOW DOES NOT INCLUDE BASEFLOW IF ANY.
00858>
00859> ----------------------------------------------------------------------
00860> 001:0011----------------------------------------------------------------
00861> --------------------
00862> | ADD HYD (080   ) | ID: NHYD     AREA     QPEAK   TPEAK   R.V.    DWF
00863> --------------------                (ha)     (cms)   (hrs)   (mm)   (cms)
00864>                    ID1 06:060       .89      .139    1.04   29.64    .000
00865>                   +ID2 07:070      2.66      .379    1.04   29.64    .000
00866>                    ==================================================
00867>                    SUM 08:080      3.55      .518    1.04   29.64    .000
00868>
00869>    NOTE:  PEAK FLOWS DO NOT INCLUDE BASEFLOWS IF ANY.
00870>
00871> ----------------------------------------------------------------------
00872> 001:0012----------------------------------------------------------------
00873> --------------------
00874> | ADD HYD (090   ) | ID: NHYD     AREA     QPEAK   TPEAK   R.V.    DWF
00875> --------------------                (ha)     (cms)   (hrs)   (mm)   (cms)
00876>                    ID1 05:050      5.01      .623    1.08   28.13    .000
00877>                   +ID2 08:080      3.55      .518    1.04   29.64    .000
00878>                    ==================================================
00879>                    SUM 09:090      8.56     1.118    1.08   28.76    .000
00880>
00881>    NOTE:  PEAK FLOWS DO NOT INCLUDE BASEFLOWS IF ANY.
00882>
00883> ----------------------------------------------------------------------
00884> 001:0013----------------------------------------------------------------
00885> --------------------
00886> | ROUTE RESERVOIR  |     Requested routing time step =  1.0 min.
00887> |  IN>09:(090   )  |
00888> | OUT<10:(POND  )  |     =========  OUTFLOW STORAGE TABLE  =========
00889> --------------------     OUTFLOW    STORAGE  |  OUTFLOW    STORAGE
00890>                            (cms)    (ha.m.)  |   (cms)    (ha.m.)
00891>                             .000   .0000E+00  |    .593   .6251E+00
00892>                             .008   .6560E-01  |    .654   .6631E+00
00893>                             .017   .1311E+00  |    .797   .7391E+00
00894>                             .093   .2831E+00  |    .950   .8274E+00
00895>                             .233   .3971E+00  |   1.304   .9157E+00
00896>                             .337   .4731E+00  |   1.880   .1004E+01
00897>                             .465   .5491E+00  |   2.577   .1092E+01
00898>                             .531   .5871E+00  |    .000   .0000E+00
00899>
00900>      ROUTING RESULTS            AREA     QPEAK     TPEAK       R.V.
00901>      --------------------        (ha)     (cms)     (hrs)       (mm)
00902>      INFLOW >09: (090   )       8.56     1.118     1.083     28.757
00903>      OUTFLOW<10: (POND  )       8.56      .056     3.000     28.754
00904>
00905>                     PEAK   FLOW   REDUCTION [Qout/Qin](%)=    5.030
00906>                     TIME SHIFT OF PEAK FLOW         (min)=   115.00
00907>                     MAXIMUM  STORAGE   USED       (ha.m.)=.2095E+00
00908>
00909> ----------------------------------------------------------------------
00910> 001:0014----------------------------------------------------------------
00911> ***********************************************
00912> *     Remaining Hawthorne Industrial Park     *
00913> ***********************************************
00914> *
00915> * SUB-AREA No.1
00916> ----------------------
00917> | CALIB STANDHYD     |   Area    (ha)=   19.90
00918> | 01:HIP01  DT= 2.50 |   Total Imp(%)=   71.00   Dir. Conn.(%)=   50.00
00919> ----------------------
00920>                                  IMPERVIOUS    PERVIOUS (i)
00921>      Surface Area      (ha)=       14.13         5.77
00922>      Dep. Storage      (mm)=        1.57         4.67
00923>      Average Slope      (%)=         .60         1.50
00924>      Length             (m)=      580.00       100.00
00925>      Mannings n          =         .030         .250
00926>
00927>      Max.eff.Inten.(mm/hr)=        54.21        23.06
00928>                 over (min)        17.50        42.50
00929>      Storage Coeff.  (min)=       18.04 (ii)   42.02 (ii)
00930>      Unit Hyd. Tpeak (min)=       17.50        42.50
00931>      Unit Hyd. peak  (cms)=         .06          .03
00932>                                                          *TOTALS*
00933>      PEAK FLOW       (cms)=         .95          .21        1.020 (iii)
00934>      TIME TO PEAK    (hrs)=        1.21         1.71        1.250
00935>      RUNOFF VOLUME    (mm)=       30.29        13.34       21.814
00936>      TOTAL RAINFALL   (mm)=       31.86        31.86       31.860
00937>      RUNOFF COEFFICIENT   =         .95          .42         .685
00938>
00939>        (i) CN PROCEDURE SELECTED FOR PERVIOUS LOSSES:
00940>            CN* =  81.0    Ia = Dep. Storage  (Above)
00941>       (ii) TIME STEP (DT) SHOULD BE SMALLER OR EQUAL
00942>            THAN THE STORAGE COEFFICIENT.
00943>      (iii) PEAK FLOW DOES NOT INCLUDE BASEFLOW IF ANY.
00944>
00945> ----------------------------------------------------------------------
00946> 001:0015----------------------------------------------------------------
00947> --------------------
00948> | ADD HYD (HIP02 ) | ID: NHYD     AREA     QPEAK   TPEAK   R.V.    DWF
00949> --------------------                (ha)     (cms)   (hrs)   (mm)   (cms)
00950>                    ID1 10:POND      8.56      .056    3.00   28.75    .000
00951>                   +ID2 01:HIP01    19.90     1.020    1.25   21.81    .000
00952>                    ==================================================
00953>                    SUM 02:HIP02    28.46     1.039    1.25   23.90    .000
00954>
00955>    NOTE:  PEAK FLOWS DO NOT INCLUDE BASEFLOWS IF ANY.
00956>
00957> ----------------------------------------------------------------------
00958> 001:0016----------------------------------------------------------------
00959> *
00960> * SUB-AREA No.2
00961> ----------------------
00962> | CALIB STANDHYD     |   Area    (ha)=   17.00
00963> | 03:HIP03  DT= 2.50 |   Total Imp(%)=   71.00   Dir. Conn.(%)=   50.00
00964> ----------------------
00965>                                  IMPERVIOUS    PERVIOUS (i)
00966>      Surface Area      (ha)=       12.07         4.93
00967>      Dep. Storage      (mm)=        1.57         4.67
00968>      Average Slope      (%)=         .65         1.50
00969>      Length             (m)=      450.00       100.00
00970>      Mannings n          =         .030         .250
00971>
00972>      Max.eff.Inten.(mm/hr)=        59.23        25.04
00973>                 over (min)        15.00        37.50
00974>      Storage Coeff.  (min)=       14.60 (ii)   37.80 (ii)
00975>      Unit Hyd. Tpeak (min)=       15.00        37.50
00976>      Unit Hyd. peak  (cms)=         .08          .03
00977>                                                          *TOTALS*
00978>      PEAK FLOW       (cms)=         .91          .19         .978 (iii)
00979>      TIME TO PEAK    (hrs)=        1.17         1.63        1.167
00980>      RUNOFF VOLUME    (mm)=       30.29        13.34       21.814
00981>      TOTAL RAINFALL   (mm)=       31.86        31.86       31.860
00982>      RUNOFF COEFFICIENT   =         .95          .42         .685
00983>
00984>        (i) CN PROCEDURE SELECTED FOR PERVIOUS LOSSES:
00985>            CN* =  81.0    Ia = Dep. Storage  (Above)
00986>       (ii) TIME STEP (DT) SHOULD BE SMALLER OR EQUAL
00987>            THAN THE STORAGE COEFFICIENT.
00988>      (iii) PEAK FLOW DOES NOT INCLUDE BASEFLOW IF ANY.
00989>
00990> ----------------------------------------------------------------------
00991> 001:0017----------------------------------------------------------------
00992> *
00993> * SUB-AREA No.3
00994> ----------------------
00995> | CALIB STANDHYD     |   Area    (ha)=   15.60
00996> | 04:HIP04  DT= 2.50 |   Total Imp(%)=   71.00   Dir. Conn.(%)=   50.00
00997> ----------------------
00998>                                  IMPERVIOUS    PERVIOUS (i)
00999>      Surface Area      (ha)=       11.08         4.52
01000>      Dep. Storage      (mm)=        1.57         4.67
01001>      Average Slope      (%)=         .50         1.50
01002>      Length             (m)=      600.00       100.00
01003>      Mannings n          =         .030         .250
01004>
01005>      Max.eff.Inten.(mm/hr)=        50.44        22.17
01006>                 over (min)        20.00        45.00
01007>      Storage Coeff.  (min)=       20.01 (ii)   44.37 (ii)
01008>      Unit Hyd. Tpeak (min)=       20.00        45.00
01009>      Unit Hyd. peak  (cms)=         .06          .03
01010>                                                          *TOTALS*
01011>      PEAK FLOW       (cms)=         .69          .16         .753 (iii)
01012>      TIME TO PEAK    (hrs)=        1.25         1.79        1.292
01013>      RUNOFF VOLUME    (mm)=       30.29        13.34       21.814
01014>      TOTAL RAINFALL   (mm)=       31.86        31.86       31.860
01015>      RUNOFF COEFFICIENT   =         .95          .42         .685
01016>
01017>        (i) CN PROCEDURE SELECTED FOR PERVIOUS LOSSES:
01018>            CN* =  81.0    Ia = Dep. Storage  (Above)
01019>       (ii) TIME STEP (DT) SHOULD BE SMALLER OR EQUAL
01020>            THAN THE STORAGE COEFFICIENT.
01021>      (iii) PEAK FLOW DOES NOT INCLUDE BASEFLOW IF ANY.
01022>
01023> ----------------------------------------------------------------------
01024> 001:0018----------------------------------------------------------------
01025> --------------------
01026> | ADD HYD (HIP05 ) | ID: NHYD     AREA     QPEAK   TPEAK   R.V.    DWF
01027> --------------------                (ha)     (cms)   (hrs)   (mm)   (cms)
01028>                    ID1 03:HIP03    17.00      .978    1.17   21.81    .000
01029>                   +ID2 04:HIP04    15.60      .753    1.29   21.81    .000
01030>                    ==================================================
01031>                    SUM 05:HIP05    32.60     1.698    1.21   21.81    .000
01032>
01033>    NOTE:  PEAK FLOWS DO NOT INCLUDE BASEFLOWS IF ANY.
01034>
01035> ----------------------------------------------------------------------
01036> 001:0019----------------------------------------------------------------
01037> --------------------
01038> | ADD HYD (HIP06 ) | ID: NHYD     AREA     QPEAK   TPEAK   R.V.    DWF
01039> --------------------                (ha)     (cms)   (hrs)   (mm)   (cms)
01040>                    ID1 05:HIP05    32.60     1.698    1.21   21.81    .000
01041>                   +ID2 02:HIP02    28.46     1.039    1.25   23.90    .000
01042>                    ==================================================
01043>                    SUM 06:HIP06    61.06     2.733    1.21   22.79    .000
01044>
01045>    NOTE:  PEAK FLOWS DO NOT INCLUDE BASEFLOWS IF ANY.
01046>
01047> ----------------------------------------------------------------------
01048> 001:0020----------------------------------------------------------------
01049> *
01050> * SUB-AREA No.4
01051> ----------------------
01052> | CALIB STANDHYD     |   Area    (ha)=   12.20
01053> | 07:HIP07  DT= 2.50 |   Total Imp(%)=   71.00   Dir. Conn.(%)=   50.00
01054> ----------------------
01055>                                  IMPERVIOUS    PERVIOUS (i)
01056>      Surface Area      (ha)=        8.66         3.54
01057>      Dep. Storage      (mm)=        1.57         4.67
01058>      Average Slope      (%)=         .70         1.50
01059>      Length             (m)=      210.00       100.00
01060>      Mannings n          =         .030         .250
01061>
01062>      Max.eff.Inten.(mm/hr)=        76.81        29.02
01063>                 over (min)         7.50        30.00
01064>      Storage Coeff.  (min)=        8.15 (ii)   30.01 (ii)
01065>      Unit Hyd. Tpeak (min)=        7.50        30.00
01066>      Unit Hyd. peak  (cms)=         .14          .04
01067>                                                          *TOTALS*
01068>      PEAK FLOW       (cms)=         .91          .16         .941 (iii)
01069>      TIME TO PEAK    (hrs)=        1.04         1.50        1.042
01070>      RUNOFF VOLUME    (mm)=       30.29        13.34       21.814
01071>      TOTAL RAINFALL   (mm)=       31.86        31.86       31.860
01072>      RUNOFF COEFFICIENT   =         .95          .42         .685
01073>
01074>        (i) CN PROCEDURE SELECTED FOR PERVIOUS LOSSES:
01075>            CN* =  81.0    Ia = Dep. Storage  (Above)
01076>       (ii) TIME STEP (DT) SHOULD BE SMALLER OR EQUAL
01077>            THAN THE STORAGE COEFFICIENT.
01078>      (iii) PEAK FLOW DOES NOT INCLUDE BASEFLOW IF ANY.
01079>
01080> ----------------------------------------------------------------------
```

```
01081> 001:0021----------------------------------------------------------------------
01082> *
01083> *SUB-AREA No.5
01084> ---------------------
01085> | DESIGN NASHYD      |   Area     (ha)=    4.00   Curve Number    (CN)=85.00
01086> | 08:Pond-B DT= 2.50 |   Ia       (mm)=   4.670   # of Linear Res.(N)= 3.00
01087> ---------------------   U.H. Tp(hrs)=    .170
01088>
01089>      Unit Hyd Qpeak  (cms)=     .899
01090>
01091>      PEAK FLOW       (cms)=     .145 (i)
01092>      TIME TO PEAK    (hrs)=    1.167
01093>      RUNOFF VOLUME    (mm)=   10.266
01094>      TOTAL RAINFALL   (mm)=   31.860
01095>      RUNOFF COEFFICIENT   =     .322
01096>
01097>      (i) PEAK FLOW DOES NOT INCLUDE BASEFLOW IF ANY.
01098>
01099> ----------------------------------------------------------------------------
01100> 001:0022----------------------------------------------------------------------
01101> --------------------
01102> | ADD HYD (HIP08 ) | ID: NHYD     AREA     QPEAK   TPEAK   R.V.    DWF
01103> --------------------                (ha)     (cms)   (hrs)   (mm)   (cms)
01104>                     ID1 06:HIP06   61.06    2.733    1.21   22.79    .000
01105>                    +ID2 07:HIP07   12.20     .941    1.04   21.81    .000
01106>                    +ID3 08:Pond-B   4.00     .145    1.17   10.27    .000
01107>                     ==================================================
01108>                     SUM 09:HIP08   77.26    3.542    1.21   21.98    .000
01109>
01110>    NOTE:  PEAK FLOWS DO NOT INCLUDE BASEFLOWS IF ANY.
01111>
01112> ----------------------------------------------------------------------------
01113> 001:0023----------------------------------------------------------------------
01114> ---------------------
01115> | ROUTE RESERVOIR    |     Requested routing time step =  1.0 min.
01116> |  IN>09:(HIP08 )    |
01117> | OUT<10:(HIP-PO)    |     =========  OUTFLOW STORAGE TABLE  =========
01118> ---------------------     OUTFLOW    STORAGE   |  OUTFLOW    STORAGE
01119>                              (cms)     (ha.m.)  |    (cms)     (ha.m.)
01120>                               .000  .0000E+00   |     .724  .2210E+01
01121>                               .048  .5740E-01   |     .937  .2501E+01
01122>                               .054  .2434E+00   |    1.262  .2798E+01
01123>                               .059  .5834E+00   |    1.404  .3101E+01
01124>                               .062  .8400E+00   |    1.532  .3410E+01
01125>                               .064  .1102E+01   |    1.650  .3724E+01
01126>                               .147  .1370E+01   |    2.409  .4044E+01
01127>                               .280  .1644E+01   |    3.689  .4370E+01
01128>                               .472  .1924E+01   |     .000  .0000E+00
01129>
01130>      ROUTING RESULTS            AREA     QPEAK     TPEAK       R.V.
01131>      ---------------------       (ha)     (cms)     (hrs)       (mm)
01132>      INFLOW >09: (HIP08 )      77.26     3.542     1.208     21.985
01133>      OUTFLOW<10: (HIP-PO)      77.26      .148     4.014     21.985
01134>
01135>                      PEAK   FLOW   REDUCTION [Qout/Qin](%)=    4.179
01136>                      TIME SHIFT OF PEAK FLOW         (min)=   168.33
01137>                      MAXIMUM  STORAGE   USED       (ha.m.)=.1373E+01
01138>
01139> ----------------------------------------------------------------------------
01140> 001:0024----------------------------------------------------------------------
01141> *
01142> *SUB-AREA No. 6
01143> ---------------------
01144> | DESIGN NASHYD      |   Area     (ha)=    2.70   Curve Number    (CN)=76.00
01145> | 01:A3      DT= 2.50 |   Ia       (mm)=   4.670   # of Linear Res.(N)= 3.00
01146> ---------------------   U.H. Tp(hrs)=    .800
01147>
01148>      Unit Hyd Qpeak  (cms)=     .129
01149>
01150>      PEAK FLOW       (cms)=     .024 (i)
01151>      TIME TO PEAK    (hrs)=    2.083
01152>      RUNOFF VOLUME    (mm)=    6.883
01153>      TOTAL RAINFALL   (mm)=   31.860
01154>      RUNOFF COEFFICIENT   =     .216
01155>
01156>      (i) PEAK FLOW DOES NOT INCLUDE BASEFLOW IF ANY.
01157>
01158> ----------------------------------------------------------------------------
01159> 001:0025----------------------------------------------------------------------
01160> --------------------
01161> | ADD HYD (Ultima) | ID: NHYD     AREA     QPEAK   TPEAK   R.V.    DWF
01162> --------------------                (ha)     (cms)   (hrs)   (mm)   (cms)
01163>                     ID1 10:HIP-PO  77.26     .148    4.01   21.98    .000
01164>                    +ID2 01:A3       2.70     .024    2.08    6.88    .000
01165>                     ==================================================
01166>                     SUM 02:Ultima  79.96     .156    3.65   21.47    .000
01167>
01168>    NOTE:  PEAK FLOWS DO NOT INCLUDE BASEFLOWS IF ANY.
01169>
01170> ----------------------------------------------------------------------------
01171> 001:0026----------------------------------------------------------------------
01172> ***********************************************************************
01173> *        CALCULATION OF 3HR - 1:5 YEAR STORM EVENT              *
01174> ***********************************************************************
01175> ---------------------
01176> | START            |  Project  dir.: V:\20983.DU\ENG\FINALS~1\SWMHYM~1\
01177> ---------------------  Rainfall dir.: V:\20983.DU\ENG\FINALS~1\SWMHYM~1\
01178>     TZERO =    .00 hrs on        0
01179>     METOUT=   2 (output = METRIC)
01180>     NRUN  = 001
01181>     NSTORM=   0
01182> ----------------------------------------------------------------------------
01183> 001:0002----------------------------------------------------------------------
01184> ---------------------
01185> | CHICAGO STORM    |     IDF curve parameters: A= 998.071
01186> | Ptotal= 42.51 mm |                           B=   6.053
01187> ---------------------                           C=    .814
01188>                            used in:   INTENSITY =  A / (t + B)^C
01189>
01190>                            Duration of storm  =  3.00 hrs
01191>                            Storm time step    = 10.00 min
01192>                            Time to peak ratio =   .33
01193>
01194>                TIME    RAIN |  TIME    RAIN |  TIME    RAIN |  TIME    RAIN
01195>                 hrs   mm/hr |   hrs   mm/hr |   hrs   mm/hr |   hrs   mm/hr
01196>                 .17   3.682 |  1.00 104.193 |  1.83   6.689 |  2.67   3.510
01197>                 .33   4.582 |  1.17  32.037 |  2.00   5.628 |  2.83   3.220
01198>                 .50   6.151 |  1.33  16.337 |  2.17   4.872 |  3.00   2.978
01199>                 .67   9.614 |  1.50  10.965 |  2.33   4.305 |
01200>                 .83  24.170 |  1.67   8.287 |  2.50   3.864 |
01201>
01202> ----------------------------------------------------------------------------
01203> 001:0003----------------------------------------------------------------------
01204> ---------------------
01205> | DEFAULT VALUES     |  Filename: V:\20983.DU\ENG\FINALS~1\SWMHYM~1\ORGA.VAL
01206> ---------------------  ICASEdv = 1 (read and print data)
01207>      FileTitle= ------ ENTER YOUR COMMENTS ON THIS LINE AND THE NEXT ONE ---
01208>                 ------ PARAMETER VALUES MUST BE ENTERD AFTER COLUMN 60 ----□
01209>      Horton's infiltration equation parameters:
01210>      [Fo= 50.00 mm/hr] [Fc= 7.50 mm/hr] [DCAY= 2.00 /hr] [F=  .00 mm]
01211>      Parameters for PERVIOUS surfaces in STANDHYD:
01212>      [IAper=   4.67 mm] [LGP=40.00 m] [MNP= .250]
01213>      Parameters for IMPERVIOUS surfaces in STANDHYD:
01214>      [IAimp=   1.57 mm] [CLI= 1.50]   [MNI= .035]
01215>      Parameters used in NASHYD:
01216>      [Ia=   4.67 mm] [N= 3.00]
01217> ----------------------------------------------------------------------------
01218> 001:0004----------------------------------------------------------------------
01219> ***********************************
01220> *          ORGAWORLD FILE         *
01221> ***********************************
01222> *
01223> * SUB-AREA No.1
01224> ---------------------
01225> | CALIB STANDHYD     |   Area     (ha)=    2.07
01226> | 01:010     DT= 2.50 |   Total Imp(%)=   84.00   Dir. Conn.(%)=   84.00
01227> ---------------------
01228>                                IMPERVIOUS    PERVIOUS (i)
01229>      Surface Area      (ha)=       1.74          .33
01230>      Dep. Storage      (mm)=       1.57         4.67
01231>      Average Slope      (%)=        .52         1.00
01232>      Length             (m)=     204.72        20.00
01233>      Mannings n            =       .030         .250
01234>
01235>      Max.eff.Inten.(mm/hr)=     104.19        24.26
01236>                 over (min)        7.50        17.50
01237>      Storage Coeff.  (min)=       7.76 (ii)   17.86 (ii)
01238>      Unit Hyd. Tpeak (min)=       7.50        17.50
01239>      Unit Hyd. peak  (cms)=        .15         .06
01240>                                                          *TOTALS*
01241>      PEAK FLOW       (cms)=        .36         .01          .362 (iii)
01242>      TIME TO PEAK    (hrs)=       1.04        1.25         1.042
01243>      RUNOFF VOLUME    (mm)=      40.94       14.70        36.745
01244>      TOTAL RAINFALL   (mm)=      42.51       42.51        42.514
01245>      RUNOFF COEFFICIENT   =        .96         .35          .864
01246>
01247>        (i) CN PROCEDURE SELECTED FOR PERVIOUS LOSSES:
01248>            CN* =  81.0    Ia = Dep. Storage  (Above)
01249>       (ii) TIME STEP (DT) SHOULD BE SMALLER OR EQUAL
01250>            THAN THE STORAGE COEFFICIENT.
01251>      (iii) PEAK FLOW DOES NOT INCLUDE BASEFLOW IF ANY.
01252>
01253> ----------------------------------------------------------------------------
01254> 001:0005----------------------------------------------------------------------
01255> *
01256> * SUB-AREA No.2
01257> ---------------------
01258> | CALIB STANDHYD     |   Area     (ha)=    1.54
01259> | 02:020     DT= 2.50 |   Total Imp(%)=   92.00   Dir. Conn.(%)=   92.00
01260> ---------------------
01261>                                IMPERVIOUS    PERVIOUS (i)
01262>      Surface Area      (ha)=       1.42          .12
01263>      Dep. Storage      (mm)=       1.57         4.67
01264>      Average Slope      (%)=        .50         1.00
01265>      Length             (m)=     244.34         5.00
01266>      Mannings n            =       .030         .030
01267>
01268>      Max.eff.Inten.(mm/hr)=     104.19        31.02
01269>                 over (min)        7.50        10.00
01270>      Storage Coeff.  (min)=       8.73 (ii)    9.85 (ii)
01271>      Unit Hyd. Tpeak (min)=       7.50        10.00
01272>      Unit Hyd. peak  (cms)=        .14         .11
01273>                                                          *TOTALS*
01274>      PEAK FLOW       (cms)=        .28         .01          .283 (iii)
01275>      TIME TO PEAK    (hrs)=       1.04        1.13         1.042
01276>      RUNOFF VOLUME    (mm)=      40.94       14.70        38.845
01277>      TOTAL RAINFALL   (mm)=      42.51       42.51        42.514
01278>      RUNOFF COEFFICIENT   =        .96         .35          .914
01279>
01280>        (i) CN PROCEDURE SELECTED FOR PERVIOUS LOSSES:
01281>            CN* =  81.0    Ia = Dep. Storage  (Above)
01282>       (ii) TIME STEP (DT) SHOULD BE SMALLER OR EQUAL
01283>            THAN THE STORAGE COEFFICIENT.
01284>      (iii) PEAK FLOW DOES NOT INCLUDE BASEFLOW IF ANY.
01285>
01286> ----------------------------------------------------------------------------
01287> 001:0006----------------------------------------------------------------------
01288> *
01289> * SUB-AREA No.3
01290> ---------------------
01291> | CALIB STANDHYD     |   Area     (ha)=    1.40
01292> | 03:030     DT= 2.50 |   Total Imp(%)=   97.00   Dir. Conn.(%)=   97.00
01293> ---------------------
01294>                                IMPERVIOUS    PERVIOUS (i)
01295>      Surface Area      (ha)=       1.36          .04
01296>      Dep. Storage      (mm)=       1.57         4.67
01297>      Average Slope      (%)=        .51         1.00
01298>      Length             (m)=     225.63         5.00
01299>      Mannings n            =       .030         .030
01300>
01301>      Max.eff.Inten.(mm/hr)=     104.19        31.02
01302>                 over (min)        7.50        10.00
01303>      Storage Coeff.  (min)=       8.28 (ii)    9.39 (ii)
01304>      Unit Hyd. Tpeak (min)=       7.50        10.00
01305>      Unit Hyd. peak  (cms)=        .14         .12
01306>                                                          *TOTALS*
01307>      PEAK FLOW       (cms)=        .27         .00          .274 (iii)
01308>      TIME TO PEAK    (hrs)=       1.04        1.13         1.042
01309>      RUNOFF VOLUME    (mm)=      40.94       14.70        40.157
01310>      TOTAL RAINFALL   (mm)=      42.51       42.51        42.514
01311>      RUNOFF COEFFICIENT   =        .96         .35          .945
01312>
01313>        (i) CN PROCEDURE SELECTED FOR PERVIOUS LOSSES:
01314>            CN* =  81.0    Ia = Dep. Storage  (Above)
01315>       (ii) TIME STEP (DT) SHOULD BE SMALLER OR EQUAL
01316>            THAN THE STORAGE COEFFICIENT.
01317>      (iii) PEAK FLOW DOES NOT INCLUDE BASEFLOW IF ANY.
01318>
01319> ----------------------------------------------------------------------------
01320> 001:0007----------------------------------------------------------------------
01321> --------------------
01322> | ADD HYD (040   ) | ID: NHYD     AREA     QPEAK   TPEAK   R.V.    DWF
01323> --------------------                (ha)     (cms)   (hrs)   (mm)   (cms)
01324>                     ID1 01:010     2.07      .362    1.04   36.75    .000
01325>                    +ID2 02:020     1.54      .283    1.04   38.84    .000
01326>                     ==================================================
01327>                     SUM 04:040     3.61      .645    1.04   37.64    .000
01328>
01329>    NOTE:  PEAK FLOWS DO NOT INCLUDE BASEFLOWS IF ANY.
01330>
01331> ----------------------------------------------------------------------------
01332> 001:0008----------------------------------------------------------------------
01333> --------------------
01334> | ADD HYD (050   ) | ID: NHYD     AREA     QPEAK   TPEAK   R.V.    DWF
01335> --------------------                (ha)     (cms)   (hrs)   (mm)   (cms)
01336>                     ID1 03:030     1.40      .274    1.04   40.16    .000
01337>                    +ID2 04:040     3.61      .645    1.04   37.64    .000
01338>                     ==================================================
01339>                     SUM 05:050     5.01      .918    1.04   38.34    .000
01340>
01341>    NOTE:  PEAK FLOWS DO NOT INCLUDE BASEFLOWS IF ANY.
01342>
01343> ----------------------------------------------------------------------------
01344> 001:0009----------------------------------------------------------------------
01345> *
01346> * SUB-AREA No.4
01347> ---------------------
01348> | CALIB STANDHYD     |   Area     (ha)=     .89
01349> | 06:060     DT= 2.50 |   Total Imp(%)=   97.00   Dir. Conn.(%)=   97.00
01350> ---------------------
```

```
                                   IMPERVIOUS    PERVIOUS (i)
        Surface Area      (ha)=       .86           .03
        Dep. Storage      (mm)=      1.57          4.67
        Average Slope      (%)=       .93           .70
        Length             (m)=    164.82         40.00
        Mannings n            =      .030          .250

        Max.eff.Inten.(mm/hr)=     104.19         20.32
                   over (min)        5.00         25.00
        Storage Coeff.   (min)=      5.72 (ii)    24.02 (ii)
        Unit Hyd. Tpeak  (min)=      5.00         25.00
        Unit Hyd. peak   (cms)=       .20           .05
                                                              *TOTALS*
        PEAK FLOW        (cms)=       .20           .00          .205 (iii)
        TIME TO PEAK     (hrs)=      1.00          1.38         1.000
        RUNOFF VOLUME     (mm)=     40.94         14.70        40.157
        TOTAL RAINFALL    (mm)=     42.51         42.51        42.514
        RUNOFF COEFFICIENT    =       .96           .35          .945

           (i) CN PROCEDURE SELECTED FOR PERVIOUS LOSSES:
               CN* =  81.0    Ia = Dep. Storage  (Above)
          (ii) TIME STEP (DT) SHOULD BE SMALLER OR EQUAL
               THAN THE STORAGE COEFFICIENT.
         (iii) PEAK FLOW DOES NOT INCLUDE BASEFLOW IF ANY.

-----------------------------------------------------------------------------
001:0010---------------------------------------------------------------------
*
* SUB-AREA No.5
----------------------
| CALIB STANDHYD      |    Area    (ha)=    2.66
| 07:070    DT= 2.50  |    Total Imp(%)=   97.00   Dir. Conn.(%)=   97.00
----------------------
                                   IMPERVIOUS    PERVIOUS (i)
        Surface Area      (ha)=      2.58           .08
        Dep. Storage      (mm)=      1.57          4.67
        Average Slope      (%)=       .61          1.50
        Length             (m)=    207.25         20.00
        Mannings n            =      .030          .250

        Max.eff.Inten.(mm/hr)=     104.19         24.26
                   over (min)        7.50         17.50
        Storage Coeff.   (min)=      7.45 (ii)    16.40 (ii)
        Unit Hyd. Tpeak  (min)=      7.50         17.50
        Unit Hyd. peak   (cms)=       .15           .07
                                                              *TOTALS*
        PEAK FLOW        (cms)=       .54           .00          .538 (iii)
        TIME TO PEAK     (hrs)=      1.04          1.25         1.042
        RUNOFF VOLUME     (mm)=     40.94         14.70        40.157
        TOTAL RAINFALL    (mm)=     42.51         42.51        42.514
        RUNOFF COEFFICIENT    =       .96           .35          .945

           (i) CN PROCEDURE SELECTED FOR PERVIOUS LOSSES:
               CN* =  81.0    Ia = Dep. Storage  (Above)
          (ii) TIME STEP (DT) SHOULD BE SMALLER OR EQUAL
               THAN THE STORAGE COEFFICIENT.
         (iii) PEAK FLOW DOES NOT INCLUDE BASEFLOW IF ANY.

-----------------------------------------------------------------------------
001:0011---------------------------------------------------------------------
--------------------
| ADD HYD (080   ) | ID: NHYD      AREA     QPEAK   TPEAK   R.V.    DWF
--------------------                (ha)     (cms)   (hrs)   (mm)   (cms)
                   ID1 06:060        .89      .205    1.00  40.16    .000
                  +ID2 07:070       2.66      .538    1.04  40.16    .000
                   ================================================
                   SUM 08:080       3.55      .733    1.04  40.16    .000

    NOTE:  PEAK FLOWS DO NOT INCLUDE BASEFLOWS IF ANY.

-----------------------------------------------------------------------------
001:0012---------------------------------------------------------------------
--------------------
| ADD HYD (090   ) | ID: NHYD      AREA     QPEAK   TPEAK   R.V.    DWF
--------------------                (ha)     (cms)   (hrs)   (mm)   (cms)
                   ID1 05:050       5.01      .918    1.04  38.34    .000
                  +ID2 08:080       3.55      .733    1.04  40.16    .000
                   ================================================
                   SUM 09:090       8.56     1.651    1.04  39.10    .000

    NOTE:  PEAK FLOWS DO NOT INCLUDE BASEFLOWS IF ANY.

-----------------------------------------------------------------------------
001:0013---------------------------------------------------------------------
---------------------
| ROUTE RESERVOIR    |    Requested routing time step =  1.0 min.
|  IN>09:(090    )   |
| OUT<10:(POND   )   |    =========  OUTLFOW STORAGE TABLE  =========
---------------------     OUTFLOW    STORAGE   |  OUTFLOW    STORAGE
                           (cms)     (ha.m.)   |   (cms)     (ha.m.)
                            .000  .0000E+00    |     .593  .6251E+00
                            .008  .6560E-01    |     .654  .6631E+00
                            .017  .1311E+00    |     .797  .7391E+00
                            .093  .2831E+00    |     .950  .8274E+00
                            .233  .3971E+00    |    1.304  .9157E+00
                            .337  .4731E+00    |    1.880  .1004E+01
                            .465  .5491E+00    |    2.577  .1092E+01
                            .531  .5871E+00    |     .000  .0000E+00

       ROUTING RESULTS               AREA      QPEAK      TPEAK        R.V.
       -------------------           (ha)      (cms)      (hrs)        (mm)
       INFLOW >09: (090    )         8.56      1.651      1.042      39.096
       OUTFLOW<10: (POND   )         8.56       .089      2.625      39.093

                   PEAK   FLOW   REDUCTION [Qout/Qin](%)=    5.413
                   TIME SHIFT OF PEAK FLOW         (min)=    95.00
                   MAXIMUM   STORAGE   USED       (ha.m.)=.2758E+00

-----------------------------------------------------------------------------
001:0014---------------------------------------------------------------------
*********************************************
*     Remaining Hawthorne Industrial Park    *
*********************************************
*
* SUB-AREA No.1
----------------------
| CALIB STANDHYD      |    Area    (ha)=   19.90
| 01:HIP01  DT= 2.50  |    Total Imp(%)=   71.00   Dir. Conn.(%)=   50.00
----------------------
                                   IMPERVIOUS    PERVIOUS (i)
        Surface Area      (ha)=     14.13          5.77
        Dep. Storage      (mm)=      1.57          4.67
        Average Slope      (%)=       .60          1.50
        Length             (m)=    580.00        100.00
        Mannings n            =      .030          .250

        Max.eff.Inten.(mm/hr)=      80.14         42.65
                   over (min)       15.00         35.00
        Storage Coeff.   (min)=     15.43 (ii)    34.18 (ii)
        Unit Hyd. Tpeak  (min)=     15.00         35.00
        Unit Hyd. peak   (cms)=       .07           .03
                                                              *TOTALS*
        PEAK FLOW        (cms)=      1.41           .40         1.572 (iii)
        TIME TO PEAK     (hrs)=      1.17          1.54         1.208
        RUNOFF VOLUME     (mm)=     40.94         21.31        31.126
        TOTAL RAINFALL    (mm)=     42.51         42.51        42.514
        RUNOFF COEFFICIENT    =       .96           .50          .732

           (i) CN PROCEDURE SELECTED FOR PERVIOUS LOSSES:
               CN* =  81.0    Ia = Dep. Storage  (Above)
          (ii) TIME STEP (DT) SHOULD BE SMALLER OR EQUAL
               THAN THE STORAGE COEFFICIENT.
         (iii) PEAK FLOW DOES NOT INCLUDE BASEFLOW IF ANY.

-----------------------------------------------------------------------------
001:0015---------------------------------------------------------------------
--------------------
| ADD HYD (HIP02 ) | ID: NHYD      AREA     QPEAK   TPEAK   R.V.    DWF
--------------------                (ha)     (cms)   (hrs)   (mm)   (cms)
                   ID1 10:POND      8.56      .089    2.63  39.09    .000
                  +ID2 01:HIP01    19.90     1.572    1.21  31.13    .000
                   ================================================
                   SUM 02:HIP02    28.46     1.615    1.21  33.52    .000

    NOTE:  PEAK FLOWS DO NOT INCLUDE BASEFLOWS IF ANY.

-----------------------------------------------------------------------------
001:0016---------------------------------------------------------------------
*
* SUB-AREA No.2
----------------------
| CALIB STANDHYD      |    Area    (ha)=   17.00
| 03:HIP03  DT= 2.50  |    Total Imp(%)=   71.00   Dir. Conn.(%)=   50.00
----------------------
                                   IMPERVIOUS    PERVIOUS (i)
        Surface Area      (ha)=     12.07          4.93
        Dep. Storage      (mm)=      1.57          4.67
        Average Slope      (%)=       .65          1.50
        Length             (m)=    450.00        100.00
        Mannings n            =      .030          .250

        Max.eff.Inten.(mm/hr)=      89.76         47.48
                   over (min)       12.50         30.00
        Storage Coeff.   (min)=     12.36 (ii)    30.32 (ii)
        Unit Hyd. Tpeak  (min)=     12.50         30.00
        Unit Hyd. peak   (cms)=       .09           .04
                                                              *TOTALS*
        PEAK FLOW        (cms)=      1.36           .37         1.504 (iii)
        TIME TO PEAK     (hrs)=      1.13          1.46         1.167
        RUNOFF VOLUME     (mm)=     40.94         21.31        31.126
        TOTAL RAINFALL    (mm)=     42.51         42.51        42.514
        RUNOFF COEFFICIENT    =       .96           .50          .732

           (i) CN PROCEDURE SELECTED FOR PERVIOUS LOSSES:
               CN* =  81.0    Ia = Dep. Storage  (Above)
          (ii) TIME STEP (DT) SHOULD BE SMALLER OR EQUAL
               THAN THE STORAGE COEFFICIENT.
         (iii) PEAK FLOW DOES NOT INCLUDE BASEFLOW IF ANY.

-----------------------------------------------------------------------------
001:0017---------------------------------------------------------------------
*
* SUB-AREA No.3
----------------------
| CALIB STANDHYD      |    Area    (ha)=   15.60
| 04:HIP04  DT= 2.50  |    Total Imp(%)=   71.00   Dir. Conn.(%)=   50.00
----------------------
                                   IMPERVIOUS    PERVIOUS (i)
        Surface Area      (ha)=     11.08          4.52
        Dep. Storage      (mm)=      1.57          4.67
        Average Slope      (%)=       .50          1.50
        Length             (m)=    600.00        100.00
        Mannings n            =      .030          .250

        Max.eff.Inten.(mm/hr)=      73.27         42.65
                   over (min)       17.50         35.00
        Storage Coeff.   (min)=     17.24 (ii)    35.98 (ii)
        Unit Hyd. Tpeak  (min)=     17.50         35.00
        Unit Hyd. peak   (cms)=       .07           .03
                                                              *TOTALS*
        PEAK FLOW        (cms)=      1.03           .30         1.176 (iii)
        TIME TO PEAK     (hrs)=      1.21          1.54         1.250
        RUNOFF VOLUME     (mm)=     40.94         21.31        31.126
        TOTAL RAINFALL    (mm)=     42.51         42.51        42.514
        RUNOFF COEFFICIENT    =       .96           .50          .732

           (i) CN PROCEDURE SELECTED FOR PERVIOUS LOSSES:
               CN* =  81.0    Ia = Dep. Storage  (Above)
          (ii) TIME STEP (DT) SHOULD BE SMALLER OR EQUAL
               THAN THE STORAGE COEFFICIENT.
         (iii) PEAK FLOW DOES NOT INCLUDE BASEFLOW IF ANY.

-----------------------------------------------------------------------------
001:0018---------------------------------------------------------------------
--------------------
| ADD HYD (HIP05 ) | ID: NHYD      AREA     QPEAK   TPEAK   R.V.    DWF
--------------------                (ha)     (cms)   (hrs)   (mm)   (cms)
                   ID1 03:HIP03    17.00     1.504    1.17  31.13    .000
                  +ID2 04:HIP04    15.60     1.176    1.25  31.13    .000
                   ================================================
                   SUM 05:HIP05    32.60     2.621    1.17  31.13    .000

    NOTE:  PEAK FLOWS DO NOT INCLUDE BASEFLOWS IF ANY.

-----------------------------------------------------------------------------
001:0019---------------------------------------------------------------------
--------------------
| ADD HYD (HIP06 ) | ID: NHYD      AREA     QPEAK   TPEAK   R.V.    DWF
--------------------                (ha)     (cms)   (hrs)   (mm)   (cms)
                   ID1 05:HIP05    32.60     2.621    1.17  31.13    .000
                  +ID2 02:HIP02    28.46     1.615    1.21  33.52    .000
                   ================================================
                   SUM 06:HIP06    61.06     4.222    1.17  32.24    .000

    NOTE:  PEAK FLOWS DO NOT INCLUDE BASEFLOWS IF ANY.

-----------------------------------------------------------------------------
001:0020---------------------------------------------------------------------
*
* SUB-AREA No.4
----------------------
| CALIB STANDHYD      |    Area    (ha)=   12.20
| 07:HIP07  DT= 2.50  |    Total Imp(%)=   71.00   Dir. Conn.(%)=   50.00
----------------------
                                   IMPERVIOUS    PERVIOUS (i)
        Surface Area      (ha)=      8.66          3.54
        Dep. Storage      (mm)=      1.57          4.67
        Average Slope      (%)=       .70          1.50
        Length             (m)=    210.00        100.00
        Mannings n            =      .030          .250

        Max.eff.Inten.(mm/hr)=     104.19         52.96
                   over (min)        7.50         25.00
        Storage Coeff.   (min)=      7.21 (ii)    24.40 (ii)
        Unit Hyd. Tpeak  (min)=      7.50         25.00
        Unit Hyd. peak   (cms)=       .15           .05
                                                              *TOTALS*
        PEAK FLOW        (cms)=      1.28           .31         1.375 (iii)
        TIME TO PEAK     (hrs)=      1.04          1.38         1.042
        RUNOFF VOLUME     (mm)=     40.94         21.31        31.126
```

```
        TOTAL RAINFALL   (mm)=      42.51         42.51          42.514
        RUNOFF COEFFICIENT   =        .96           .50            .732

           (i) CN PROCEDURE SELECTED FOR PERVIOUS LOSSES:
               CN* =  81.0    Ia = Dep. Storage  (Above)
          (ii) TIME STEP (DT) SHOULD BE SMALLER OR EQUAL
               THAN THE STORAGE COEFFICIENT.
         (iii) PEAK FLOW DOES NOT INCLUDE BASEFLOW IF ANY.

--------------------------------------------------------------------------
001:0021------------------------------------------------------------------
*
*SUB-AREA No.5
---------------------
| DESIGN NASHYD       |   Area     (ha)=     4.00   Curve Number    (CN)=85.00
| 08:Pond-B DT= 2.50 |   Ia       (mm)=    4.670   # of Linear Res.(N)= 3.00
---------------------   U.H. Tp(hrs)=      .170

        Unit Hyd Qpeak  (cms)=      .899

        PEAK FLOW         (cms)=      .260 (i)
        TIME TO PEAK      (hrs)=    1.167
        RUNOFF VOLUME      (mm)=   17.325
        TOTAL RAINFALL     (mm)=   42.514
        RUNOFF COEFFICIENT   =       .408

        (i) PEAK FLOW DOES NOT INCLUDE BASEFLOW IF ANY.

--------------------------------------------------------------------------
001:0022------------------------------------------------------------------
--------------------
| ADD HYD (HIP08 ) | ID: NHYD      AREA      QPEAK    TPEAK   R.V.     DWF
--------------------               (ha)      (cms)    (hrs)   (mm)    (cms)
                 ID1 06:HIP06     61.06      4.222     1.17  32.24     .000
                +ID2 07:HIP07     12.20      1.375     1.04  31.13     .000
                +ID3 08:Pond-B     4.00       .260     1.17  17.32     .000
                 ==================================================
                 SUM 09:HIP08     77.26      5.545     1.17  31.29     .000

     NOTE:  PEAK FLOWS DO NOT INCLUDE BASEFLOWS IF ANY.

--------------------------------------------------------------------------
001:0023------------------------------------------------------------------
--------------------
| ROUTE RESERVOIR    |      Requested routing time step =  1.0 min.
|   IN>09:(HIP08 )   |
| OUT<10:(HIP-PO)    |      =========  OUTLFOW STORAGE TABLE  ========
--------------------       OUTFLOW    STORAGE   |  OUTFLOW    STORAGE
                              (cms)     (ha.m.)   |   (cms)     (ha.m.)
                               .000   .0000E+00   |     .724   .2210E+01
                               .048   .5740E-01   |     .937   .2501E+01
                               .054   .2434E+00   |    1.262   .2798E+01
                               .059   .5834E+00   |    1.404   .3101E+01
                               .062   .8400E+00   |    1.532   .3410E+01
                               .064   .1102E+01   |    1.650   .3724E+01
                               .147   .1370E+01   |    2.409   .4044E+01
                               .280   .1644E+01   |    3.689   .4370E+01
                               .472   .1924E+01   |     .000   .0000E+00

       ROUTING RESULTS              AREA      QPEAK      TPEAK        R.V.
       --------------------         (ha)      (cms)      (hrs)        (mm)
       INFLOW >09: (HIP08 )        77.26      5.545      1.167      31.292
       OUTFLOW<10: (HIP-PO)        77.26       .435      3.389      31.292

                     PEAK   FLOW   REDUCTION [Qout/Qin](%)=     7.850
                     TIME SHIFT OF PEAK FLOW          (min)=   133.33
                     MAXIMUM  STORAGE   USED         (ha.m.)=.1871E+01

--------------------------------------------------------------------------
001:0024------------------------------------------------------------------
*
*SUB-AREA No. 6
---------------------
| DESIGN NASHYD       |   Area     (ha)=     2.70   Curve Number    (CN)=76.00
| 01:A3        DT= 2.50 |   Ia       (mm)=    4.670   # of Linear Res.(N)= 3.00
---------------------   U.H. Tp(hrs)=      .800

        Unit Hyd Qpeak  (cms)=      .129

        PEAK FLOW         (cms)=      .044 (i)
        TIME TO PEAK      (hrs)=    2.042
        RUNOFF VOLUME      (mm)=   12.131
        TOTAL RAINFALL     (mm)=   42.514
        RUNOFF COEFFICIENT   =       .285

        (i) PEAK FLOW DOES NOT INCLUDE BASEFLOW IF ANY.

--------------------------------------------------------------------------
001:0025------------------------------------------------------------------
--------------------
| ADD HYD (Ultima) | ID: NHYD      AREA      QPEAK    TPEAK   R.V.     DWF
--------------------               (ha)      (cms)    (hrs)   (mm)    (cms)
                 ID1 10:HIP-PO    77.26       .435     3.39  31.29     .000
                +ID2 01:A3         2.70       .044     2.04  12.13     .000
                 ==================================================
                 SUM 02:Ultima    79.96       .457     3.29  30.65     .000

     NOTE:  PEAK FLOWS DO NOT INCLUDE BASEFLOWS IF ANY.

--------------------------------------------------------------------------
001:0026------------------------------------------------------------------
****************************************************************
*         CALCULATION OF 3HR - 1:10 YEAR STORM EVENT            *
****************************************************************
--------------------
| START              |   Project  dir.: V:\20983.DU\ENG\FINALS~1\SWMHYM~1\
--------------------   Rainfall dir.: V:\20983.DU\ENG\FINALS~1\SWMHYM~1\
    TZERO =    .00 hrs on        0
    METOUT=    2 (output = METRIC)
    NRUN  = 001
    NSTORM=    0
--------------------------------------------------------------------------
001:0002------------------------------------------------------------------
--------------------
| CHICAGO STORM    |      IDF curve parameters: A=1174.184
| Ptotal= 49.50 mm |                             B=    6.014
--------------------                             C=     .816
                          used in:   INTENSITY =  A / (t + B)^C

                          Duration of storm   =  3.00 hrs
                          Storm time step     = 10.00 min
                          Time to peak ratio =    .33

                 TIME     RAIN |   TIME     RAIN |   TIME     RAIN |   TIME     RAIN
                  hrs    mm/hr |    hrs    mm/hr |    hrs    mm/hr |    hrs    mm/hr
                  .17    4.248 |   1.00  122.142 |   1.83    7.733 |   2.67    4.049
                  .33    5.290 |   1.17   37.285 |   2.00    6.502 |   2.83    3.714
                  .50    7.108 |   1.33   18.954 |   2.17    5.625 |   3.00    3.434
                  .67   11.130 |   1.50   12.700 |   2.33    4.969 |
                  .83   28.100 |   1.67    9.588 |   2.50    4.458 |

--------------------------------------------------------------------------
001:0003------------------------------------------------------------------
--------------------
| DEFAULT VALUES      |   Filename: V:\20983.DU\ENG\FINALS~1\SWMHYM~1\ORGA.VAL
---------------------  ICASEdv = 1 (read and print data)
       FileTitle= ------ ENTER YOUR COMMENTS ON THIS LINE AND THE NEXT ONE ---
                  ------ PARAMETER VALUES MUST BE ENTERD AFTER COLUMN 60 ----□
       Horton's infiltration equation parameters:
       [Fo= 50.00 mm/hr] [Fc= 7.50 mm/hr] [DCAY= 2.00 /hr] [F=  .00 mm]
       Parameters for PERVIOUS surfaces in STANDHYD:
       [IAper=   4.67 mm] [LGP=40.00 m] [MNP= .250]
       Parameters for IMPERVIOUS surfaces in STANDHYD:
       [IAimp=   1.57 mm] [CLI= 1.50]    [MNI= .035]
       Parameters used in NASHYD:
       [Ia=   4.67 mm] [N= 3.00]
--------------------------------------------------------------------------
001:0004------------------------------------------------------------------
*********************************
*          ORGAWORLD FILE         *
*********************************
*
* SUB-AREA No.1
---------------------
| CALIB STANDHYD      |   Area     (ha)=     2.07
| 01:010      DT= 2.50 |   Total Imp(%)=    84.00   Dir. Conn.(%)=   84.00
---------------------
                                IMPERVIOUS     PERVIOUS (i)
     Surface Area       (ha)=       1.74            .33
     Dep. Storage       (mm)=       1.57           4.67
     Average Slope       (%)=        .52           1.00
     Length              (m)=     204.72          20.00
     Mannings n             =       .030           .250

     Max.eff.Inten.(mm/hr)=       122.14          34.69
               over (min)           7.50          15.00
     Storage Coeff.  (min)=         7.28 (ii)     16.04 (ii)
     Unit Hyd. Tpeak (min)=         7.50          15.00
     Unit Hyd. peak  (cms)=          .15            .07
                                                                *TOTALS*
     PEAK FLOW         (cms)=        .43            .02            .437 (iii)
     TIME TO PEAK      (hrs)=       1.04           1.21           1.042
     RUNOFF VOLUME      (mm)=      47.93          19.25          43.345
     TOTAL RAINFALL     (mm)=      49.50          49.50          49.505
     RUNOFF COEFFICIENT   =          .97            .39            .876

          (i) CN PROCEDURE SELECTED FOR PERVIOUS LOSSES:
              CN* =  81.0    Ia = Dep. Storage  (Above)
         (ii) TIME STEP (DT) SHOULD BE SMALLER OR EQUAL
              THAN THE STORAGE COEFFICIENT.
        (iii) PEAK FLOW DOES NOT INCLUDE BASEFLOW IF ANY.

--------------------------------------------------------------------------
001:0005------------------------------------------------------------------
*
* SUB-AREA No.2
---------------------
| CALIB STANDHYD      |   Area     (ha)=     1.54
| 02:020      DT= 2.50 |   Total Imp(%)=    92.00   Dir. Conn.(%)=   92.00
---------------------
                                IMPERVIOUS     PERVIOUS (i)
     Surface Area       (ha)=       1.42            .12
     Dep. Storage       (mm)=       1.57           4.67
     Average Slope       (%)=        .50           1.00
     Length              (m)=     244.34           5.00
     Mannings n             =       .030           .030

     Max.eff.Inten.(mm/hr)=       122.14          42.32
               over (min)           7.50          10.00
     Storage Coeff.  (min)=         8.20 (ii)      9.18 (ii)
     Unit Hyd. Tpeak (min)=         7.50          10.00
     Unit Hyd. peak  (cms)=          .14            .12
                                                                *TOTALS*
     PEAK FLOW         (cms)=        .33            .01            .341 (iii)
     TIME TO PEAK      (hrs)=       1.04           1.13           1.042
     RUNOFF VOLUME      (mm)=      47.93          19.25          45.640
     TOTAL RAINFALL     (mm)=      49.50          49.50          49.505
     RUNOFF COEFFICIENT   =          .97            .39            .922

          (i) CN PROCEDURE SELECTED FOR PERVIOUS LOSSES:
              CN* =  81.0    Ia = Dep. Storage  (Above)
         (ii) TIME STEP (DT) SHOULD BE SMALLER OR EQUAL
              THAN THE STORAGE COEFFICIENT.
        (iii) PEAK FLOW DOES NOT INCLUDE BASEFLOW IF ANY.

--------------------------------------------------------------------------
001:0006------------------------------------------------------------------
*
* SUB-AREA No.3
---------------------
| CALIB STANDHYD      |   Area     (ha)=     1.40
| 03:030      DT= 2.50 |   Total Imp(%)=    97.00   Dir. Conn.(%)=   97.00
---------------------
                                IMPERVIOUS     PERVIOUS (i)
     Surface Area       (ha)=       1.36            .04
     Dep. Storage       (mm)=       1.57           4.67
     Average Slope       (%)=        .51           1.00
     Length              (m)=     225.63           5.00
     Mannings n             =       .030           .030

     Max.eff.Inten.(mm/hr)=       122.14          48.18
               over (min)           7.50           7.50
     Storage Coeff.  (min)=         7.77 (ii)      8.70 (ii)
     Unit Hyd. Tpeak (min)=         7.50           7.50
     Unit Hyd. peak  (cms)=          .15            .14
                                                                *TOTALS*
     PEAK FLOW         (cms)=        .33            .00            .329 (iii)
     TIME TO PEAK      (hrs)=       1.04           1.08           1.042
     RUNOFF VOLUME      (mm)=      47.93          19.25          47.074
     TOTAL RAINFALL     (mm)=      49.50          49.50          49.505
     RUNOFF COEFFICIENT   =          .97            .39            .951

          (i) CN PROCEDURE SELECTED FOR PERVIOUS LOSSES:
              CN* =  81.0    Ia = Dep. Storage  (Above)
         (ii) TIME STEP (DT) SHOULD BE SMALLER OR EQUAL
              THAN THE STORAGE COEFFICIENT.
        (iii) PEAK FLOW DOES NOT INCLUDE BASEFLOW IF ANY.

--------------------------------------------------------------------------
001:0007------------------------------------------------------------------
--------------------
| ADD HYD (040    ) | ID: NHYD      AREA      QPEAK    TPEAK   R.V.     DWF
--------------------               (ha)      (cms)    (hrs)   (mm)    (cms)
                 ID1 01:010        2.07       .437     1.04  43.35     .000
                +ID2 02:020        1.54       .341     1.04  45.64     .000
                 ==================================================
                 SUM 04:040        3.61       .778     1.04  44.32     .000

     NOTE:  PEAK FLOWS DO NOT INCLUDE BASEFLOWS IF ANY.

--------------------------------------------------------------------------
001:0008------------------------------------------------------------------
--------------------
| ADD HYD (050    ) | ID: NHYD      AREA      QPEAK    TPEAK   R.V.     DWF
--------------------               (ha)      (cms)    (hrs)   (mm)    (cms)
                 ID1 03:030        1.40       .329     1.04  47.07     .000
                +ID2 04:040        3.61       .778     1.04  44.32     .000
                 ==================================================
                 SUM 05:050        5.01      1.107     1.04  45.09     .000
```

```
02161>
02162>      Max.eff.Inten.(mm/hr)=     122.14        72.53
02163>                 over (min)       7.50        22.50
02164>      Storage Coeff.  (min)=      6.77 (ii)   21.93 (ii)
02165>      Unit Hyd. Tpeak (min)=      7.50        22.50
02166>      Unit Hyd. peak  (cms)=       .16         .05
02167>                                                          *TOTALS*
02168>      PEAK FLOW       (cms)=      1.54         .42         1.687 (iii)
02169>      TIME TO PEAK    (hrs)=      1.04        1.33         1.042
02170>      RUNOFF VOLUME    (mm)=     47.93       26.92        37.426
02171>      TOTAL RAINFALL   (mm)=     49.50       49.50        49.505
02172>      RUNOFF COEFFICIENT   =      .97         .54          .756
02173>
02174>        (i) CN PROCEDURE SELECTED FOR PERVIOUS LOSSES:
02175>            CN* =  81.0    Ia = Dep. Storage  (Above)
02176>       (ii) TIME STEP (DT) SHOULD BE SMALLER OR EQUAL
02177>            THAN THE STORAGE COEFFICIENT.
02178>      (iii) PEAK FLOW DOES NOT INCLUDE BASEFLOW IF ANY.
02179>
02180> ----------------------------------------------------------------------
02181> 001:0021----------------------------------------------------------------
02182> *
02183> *SUB-AREA No.5
02184> ---------------------
02185> | DESIGN NASHYD      |   Area     (ha)=    4.00   Curve Number   (CN)=85.00
02186> | 08:Pond-B DT= 2.50 |   Ia       (mm)=   4.670   # of Linear Res.(N)= 3.00
02187> ---------------------   U.H. Tp(hrs)=     .170
02188>
02189>      Unit Hyd Qpeak  (cms)=      .899
02190>
02191>      PEAK FLOW       (cms)=      .345 (i)
02192>      TIME TO PEAK    (hrs)=     1.167
02193>      RUNOFF VOLUME    (mm)=    22.420
02194>      TOTAL RAINFALL   (mm)=    49.505
02195>      RUNOFF COEFFICIENT   =      .453
02196>
02197>      (i) PEAK FLOW DOES NOT INCLUDE BASEFLOW IF ANY.
02198>
02199> ----------------------------------------------------------------------
02200> 001:0022----------------------------------------------------------------
02201> ---------------------
02202> | ADD HYD (HIP08 ) | ID: NHYD     AREA     QPEAK   TPEAK   R.V.    DWF
02203> ---------------------              (ha)     (cms)   (hrs)   (mm)    (cms)
02204>                    ID1 06:HIP06   61.06    5.358    1.17   38.61    .000
02205>                   +ID2 07:HIP07   12.20    1.687    1.04   37.43    .000
02206>                   +ID3 08:Pond-B   4.00     .345    1.17   22.42    .000
02207>                    ==============================================
02208>                    SUM 09:HIP08   77.26    7.016    1.17   37.59    .000
02209>
02210>    NOTE:  PEAK FLOWS DO NOT INCLUDE BASEFLOWS IF ANY.
02211>
02212> ----------------------------------------------------------------------
02213> 001:0023----------------------------------------------------------------
02214> ---------------------
02215> | ROUTE RESERVOIR    |     Requested routing time step =  1.0 min.
02216> |  IN>09:(HIP08 )    |
02217> | OUT<10:(HIP-PO)    |     ==========  OUTLFOW STORAGE TABLE  ==========
02218> ---------------------      OUTFLOW     STORAGE   |  OUTFLOW    STORAGE
02219>                              (cms)     (ha.m.)   |   (cms)     (ha.m.)
02220>                               .000   .0000E+00   |    .724   .2210E+01
02221>                               .048   .5740E-01   |    .937   .2501E+01
02222>                               .054   .2434E+00   |   1.262   .2798E+01
02223>                               .059   .5834E+00   |   1.404   .3101E+01
02224>                               .062   .8400E+00   |   1.532   .3410E+01
02225>                               .064   .1102E+01   |   1.650   .3724E+01
02226>                               .147   .1370E+01   |   2.409   .4046E+01
02227>                               .280   .1644E+01   |   3.689   .4370E+01
02228>                               .472   .1924E+01   |    .000   .0000E+00
02229>
02230>      ROUTING RESULTS            AREA     QPEAK     TPEAK       R.V.
02231>      ---------------            (ha)     (cms)     (hrs)       (mm)
02232>      INFLOW >09: (HIP08 )      77.26     7.016     1.167      37.588
02233>      OUTFLOW<10: (HIP-PO)      77.26      .696     3.208      37.588
02234>
02235>                      PEAK   FLOW   REDUCTION [Qout/Qin](%)=    9.919
02236>                      TIME SHIFT OF PEAK FLOW         (min)=   122.50
02237>                      MAXIMUM  STORAGE   USED       (ha.m.)=.2178E+01
02238>
02239> ----------------------------------------------------------------------
02240> 001:0024----------------------------------------------------------------
02241> *
02242> *SUB-AREA No. 6
02243> ---------------------
02244> | DESIGN NASHYD      |   Area     (ha)=    2.70   Curve Number   (CN)=76.00
02245> | 01:A3      DT= 2.50 |   Ia       (mm)=   4.670   # of Linear Res.(N)= 3.00
02246> ---------------------   U.H. Tp(hrs)=     .800
02247>
02248>      Unit Hyd Qpeak  (cms)=      .129
02249>
02250>      PEAK FLOW       (cms)=      .059 (i)
02251>      TIME TO PEAK    (hrs)=     2.000
02252>      RUNOFF VOLUME    (mm)=    16.075
02253>      TOTAL RAINFALL   (mm)=    49.505
02254>      RUNOFF COEFFICIENT   =      .325
02255>
02256>      (i) PEAK FLOW DOES NOT INCLUDE BASEFLOW IF ANY.
02257>
02258> ----------------------------------------------------------------------
02259> 001:0025----------------------------------------------------------------
02260> ---------------------
02261> | ADD HYD (Ultima) | ID: NHYD     AREA     QPEAK   TPEAK   R.V.    DWF
02262> ---------------------              (ha)     (cms)   (hrs)   (mm)    (cms)
02263>                    ID1 10:HIP-PO  77.26     .696    3.21   37.59    .000
02264>                   +ID2 01:A3       2.70     .059    2.00   16.08    .000
02265>                    ==============================================
02266>                    SUM 02:Ultima  79.96     .729    3.15   36.86    .000
02267>
02268>    NOTE:  PEAK FLOWS DO NOT INCLUDE BASEFLOWS IF ANY.
02269>
02270> ----------------------------------------------------------------------
02271> 001:0026----------------------------------------------------------------
02272> ***********************************************************
02273> *        CALCULATION OF 3HR - 1:25 YEAR STORM EVENT       *
02274> ***********************************************************
02275> ---------------------
02276> | START              |  Project  dir.: V:\20983.DU\ENG\FINALS~1\SWMHYM~1\
02277> ---------------------  Rainfall dir.: V:\20983.DU\ENG\FINALS~1\SWMHYM~1\
02278>     TZERO =   .00 hrs on        0
02279>     METOUT=   2 (output = METRIC)
02280>     NRUN  = 001
02281>     NSTORM=   0
02282> ----------------------------------------------------------------------
02283> 001:0002----------------------------------------------------------------
02284> ---------------------
02285> | CHICAGO STORM      |     IDF curve parameters: A=1402.884
02286> | Ptotal= 58.23 mm   |                           B=   6.018
02287> ---------------------                           C=    .819
02288>                            used in:   INTENSITY =  A / (t + B)^C
02289>
02290>                            Duration of storm  =  3.00 hrs
02291>                            Storm time step    = 10.00 min
02292>                            Time to peak ratio =   .33
02293>
02294>                TIME    RAIN |   TIME    RAIN |   TIME    RAIN |   TIME    RAIN
02295>                 hrs   mm/hr |    hrs   mm/hr |    hrs   mm/hr |    hrs   mm/hr
02296>                 .17    4.934 |   1.00 144.693 |   1.83    9.014 |   2.67    4.701
02297>                 .33    6.152 |   1.17  43.904 |   2.00    7.571 |   2.83    4.310
02298>                 .50    8.282 |   1.33  22.224 |   2.17    6.544 |   3.00    3.983
02299>                 .67   13.006 |   1.50  14.852 |   2.33    5.776 |
02300>                 .83   33.041 |   1.67  11.192 |   2.50    5.179 |
02301>
02302> ----------------------------------------------------------------------
02303> 001:0003----------------------------------------------------------------
02304> ---------------------
02305> | DEFAULT VALUES     |  Filename: V:\20983.DU\ENG\FINALS~1\SWMHYM~1\ORGA.VAL
02306> ---------------------  ICASEdv = 1 (read and print data)
02307>      FileTitle= ------ ENTER YOUR COMMENTS ON THIS LINE AND THE NEXT ONE ---
02308>                 ------ PARAMETER VALUES MUST BE ENTERD AFTER COLUMN 60 ----□
02309>      Horton's infiltration equation parameters:
02310>      [Fo= 50.00 mm/hr] [Fc= 7.50 mm/hr] [DCAY= 2.00 /hr] [F=  .00 mm]
02311>      Parameters for PERVIOUS surfaces in STANDHYD:
02312>      [IAper=   4.67 mm] [LGP=40.00 m] [MNP= .250]
02313>      Parameters for IMPERVIOUS surfaces in STANDHYD:
02314>      [IAimp=   1.57 mm] [CLI= 1.50]   [MNI= .035]
02315>      Parameters used in NASHYD:
02316>      [Ia=   4.67 mm] [N= 3.00]
02317> ----------------------------------------------------------------------
02318> 001:0004----------------------------------------------------------------
02319> ***********************************
02320> *          ORGAWORLD FILE         *
02321> ***********************************
02322> *
02323> * SUB-AREA No.1
02324> ---------------------
02325> | CALIB STANDHYD     |   Area     (ha)=    2.07
02326> | 01:010     DT= 2.50 |   Total Imp(%)=   84.00   Dir. Conn.(%)=   84.00
02327> ---------------------
02328>                                IMPERVIOUS    PERVIOUS (i)
02329>      Surface Area     (ha)=       1.74          .33
02330>      Dep. Storage     (mm)=       1.57         4.67
02331>      Average Slope     (%)=        .52         1.00
02332>      Length            (m)=     204.72        20.00
02333>      Mannings n          =       .030         .250
02334>
02335>      Max.eff.Inten.(mm/hr)=     144.69        47.07
02336>                 over (min)        7.50        15.00
02337>      Storage Coeff.  (min)=       6.81 (ii)   14.56 (ii)
02338>      Unit Hyd. Tpeak (min)=       7.50        15.00
02339>      Unit Hyd. peak  (cms)=        .16          .08
02340>                                                          *TOTALS*
02341>      PEAK FLOW       (cms)=        .52          .03         .532 (iii)
02342>      TIME TO PEAK    (hrs)=       1.04         1.21        1.042
02343>      RUNOFF VOLUME    (mm)=      56.66        25.35       51.647
02344>      TOTAL RAINFALL   (mm)=      58.23        58.23       58.226
02345>      RUNOFF COEFFICIENT   =        .97          .44         .887
02346>
02347>        (i) CN PROCEDURE SELECTED FOR PERVIOUS LOSSES:
02348>            CN* =  81.0    Ia = Dep. Storage  (Above)
02349>       (ii) TIME STEP (DT) SHOULD BE SMALLER OR EQUAL
02350>            THAN THE STORAGE COEFFICIENT.
02351>      (iii) PEAK FLOW DOES NOT INCLUDE BASEFLOW IF ANY.
02352>
02353> ----------------------------------------------------------------------
02354> 001:0005----------------------------------------------------------------
02355> *
02356> * SUB-AREA No.2
02357> ---------------------
02358> | CALIB STANDHYD     |   Area     (ha)=    1.54
02359> | 02:020     DT= 2.50 |   Total Imp(%)=   92.00   Dir. Conn.(%)=   92.00
02360> ---------------------
02361>                                IMPERVIOUS    PERVIOUS (i)
02362>      Surface Area     (ha)=       1.42          .12
02363>      Dep. Storage     (mm)=       1.57         4.67
02364>      Average Slope     (%)=        .50         1.00
02365>      Length            (m)=     244.34         5.00
02366>      Mannings n          =       .030         .030
02367>
02368>      Max.eff.Inten.(mm/hr)=     144.69        65.19
02369>                 over (min)        7.50         7.50
02370>      Storage Coeff.  (min)=       7.66 (ii)    8.49 (ii)
02371>      Unit Hyd. Tpeak (min)=       7.50         7.50
02372>      Unit Hyd. peak  (cms)=        .15          .14
02373>                                                          *TOTALS*
02374>      PEAK FLOW       (cms)=        .40          .01         .418 (iii)
02375>      TIME TO PEAK    (hrs)=       1.04         1.08        1.042
02376>      RUNOFF VOLUME    (mm)=      56.66        25.35       54.152
02377>      TOTAL RAINFALL   (mm)=      58.23        58.23       58.226
02378>      RUNOFF COEFFICIENT   =        .97          .44         .930
02379>
02380>        (i) CN PROCEDURE SELECTED FOR PERVIOUS LOSSES:
02381>            CN* =  81.0    Ia = Dep. Storage  (Above)
02382>       (ii) TIME STEP (DT) SHOULD BE SMALLER OR EQUAL
02383>            THAN THE STORAGE COEFFICIENT.
02384>      (iii) PEAK FLOW DOES NOT INCLUDE BASEFLOW IF ANY.
02385>
02386> ----------------------------------------------------------------------
02387> 001:0006----------------------------------------------------------------
02388> *
02389> * SUB-AREA No.3
02390> ---------------------
02391> | CALIB STANDHYD     |   Area     (ha)=    1.40
02392> | 03:030     DT= 2.50 |   Total Imp(%)=   97.00   Dir. Conn.(%)=   97.00
02393> ---------------------
02394>                                IMPERVIOUS    PERVIOUS (i)
02395>      Surface Area     (ha)=       1.36          .04
02396>      Dep. Storage     (mm)=       1.57         4.67
02397>      Average Slope     (%)=        .51         1.00
02398>      Length            (m)=     225.63         5.00
02399>      Mannings n          =       .030         .030
02400>
02401>      Max.eff.Inten.(mm/hr)=     144.69        65.19
02402>                 over (min)        7.50         7.50
02403>      Storage Coeff.  (min)=       7.26 (ii)    8.09 (ii)
02404>      Unit Hyd. Tpeak (min)=       7.50         7.50
02405>      Unit Hyd. peak  (cms)=        .15          .14
02406>                                                          *TOTALS*
02407>      PEAK FLOW       (cms)=        .40          .00         .400 (iii)
02408>      TIME TO PEAK    (hrs)=       1.04         1.08        1.042
02409>      RUNOFF VOLUME    (mm)=      56.66        25.35       55.717
02410>      TOTAL RAINFALL   (mm)=      58.23        58.23       58.226
02411>      RUNOFF COEFFICIENT   =        .97          .44         .957
02412>
02413>        (i) CN PROCEDURE SELECTED FOR PERVIOUS LOSSES:
02414>            CN* =  81.0    Ia = Dep. Storage  (Above)
02415>       (ii) TIME STEP (DT) SHOULD BE SMALLER OR EQUAL
02416>            THAN THE STORAGE COEFFICIENT.
02417>      (iii) PEAK FLOW DOES NOT INCLUDE BASEFLOW IF ANY.
02418>
02419> ----------------------------------------------------------------------
02420> 001:0007----------------------------------------------------------------
02421> ---------------------
02422> | ADD HYD (040   ) | ID: NHYD     AREA     QPEAK   TPEAK   R.V.    DWF
02423> ---------------------              (ha)     (cms)   (hrs)   (mm)    (cms)
02424>                    ID1 01:010     2.07     .532    1.04   51.65    .000
02425>                   +ID2 02:020     1.54     .418    1.04   54.15    .000
02426>                    ==============================================
02427>                    SUM 04:040     3.61     .950    1.04   52.72    .000
02428>
02429>    NOTE:  PEAK FLOWS DO NOT INCLUDE BASEFLOWS IF ANY.
02430>
```

```
02431> ----------------------------------------------------------------------
02432> 001:0008-------------------------------------------------------------
02433> ---------------------
02434> | ADD HYD (050   ) | ID: NHYD     AREA     QPEAK   TPEAK   R.V.    DWF
02435> ---------------------             (ha)     (cms)   (hrs)   (mm)    (cms)
02436>                    ID1 03:030     1.40      .400    1.04   55.72    .000
02437>                   +ID2 04:040     3.61      .950    1.04   52.72    .000
02438>                    ==============================================
02439>                    SUM 05:050     5.01     1.350    1.04   53.55    .000
02440>
02441>    NOTE:  PEAK FLOWS DO NOT INCLUDE BASEFLOWS IF ANY.
02442>
02443> ----------------------------------------------------------------------
02444> 001:0009-------------------------------------------------------------
02445> *
02446> * SUB-AREA No.4
02447> ---------------------
02448> | CALIB STANDHYD    |   Area    (ha)=     .89
02449> | 06:060    DT= 2.50 |   Total Imp(%)=   97.00   Dir. Conn.(%)=   97.00
02450> ---------------------
02451>                                IMPERVIOUS    PERVIOUS (i)
02452>      Surface Area     (ha)=       .86          .03
02453>      Dep. Storage     (mm)=      1.57         4.67
02454>      Average Slope     (%)=       .93          .70
02455>      Length           (m)=    164.82        40.00
02456>      Mannings n          =       .030         .250
02457>
02458>      Max.eff.Inten.(mm/hr)=    144.69        44.12
02459>                 over (min)       5.00        17.50
02460>      Storage Coeff.  (min)=      5.02 (ii)   18.44 (ii)
02461>      Unit Hyd. Tpeak (min)=      5.00        17.50
02462>      Unit Hyd. peak  (cms)=       .22         .06
02463>                                                          *TOTALS*
02464>      PEAK FLOW       (cms)=       .30         .00          .296 (iii)
02465>      TIME TO PEAK    (hrs)=      1.00        1.25         1.000
02466>      RUNOFF VOLUME    (mm)=     56.66       25.35        55.717
02467>      TOTAL RAINFALL   (mm)=     58.23       58.23        58.226
02468>      RUNOFF COEFFICIENT   =       .97         .44          .957
02469>
02470>        (i) CN PROCEDURE SELECTED FOR PERVIOUS LOSSES:
02471>            CN* =  81.0    Ia = Dep. Storage  (Above)
02472>       (ii) TIME STEP (DT) SHOULD BE SMALLER OR EQUAL
02473>            THAN THE STORAGE COEFFICIENT.
02474>      (iii) PEAK FLOW DOES NOT INCLUDE BASEFLOW IF ANY.
02475>
02476> ----------------------------------------------------------------------
02477> 001:0010-------------------------------------------------------------
02478> *
02479> * SUB-AREA No.5
02480> ---------------------
02481> | CALIB STANDHYD    |   Area    (ha)=    2.66
02482> | 07:070    DT= 2.50 |   Total Imp(%)=   97.00   Dir. Conn.(%)=   97.00
02483> ---------------------
02484>                                IMPERVIOUS    PERVIOUS (i)
02485>      Surface Area     (ha)=      2.58          .08
02486>      Dep. Storage     (mm)=      1.57         4.67
02487>      Average Slope     (%)=       .61         1.50
02488>      Length           (m)=    207.25        20.00
02489>      Mannings n          =       .030         .250
02490>
02491>      Max.eff.Inten.(mm/hr)=    144.69        51.33
02492>                 over (min)       7.50        12.50
02493>      Storage Coeff.  (min)=      6.54 (ii)   13.16 (ii)
02494>      Unit Hyd. Tpeak (min)=      7.50        12.50
02495>      Unit Hyd. peak  (cms)=       .16         .09
02496>                                                          *TOTALS*
02497>      PEAK FLOW       (cms)=       .78         .01          .783 (iii)
02498>      TIME TO PEAK    (hrs)=      1.04        1.17         1.042
02499>      RUNOFF VOLUME    (mm)=     56.66       25.35        55.717
02500>      TOTAL RAINFALL   (mm)=     58.23       58.23        58.226
02501>      RUNOFF COEFFICIENT   =       .97         .44          .957
02502>
02503>        (i) CN PROCEDURE SELECTED FOR PERVIOUS LOSSES:
02504>            CN* =  81.0    Ia = Dep. Storage  (Above)
02505>       (ii) TIME STEP (DT) SHOULD BE SMALLER OR EQUAL
02506>            THAN THE STORAGE COEFFICIENT.
02507>      (iii) PEAK FLOW DOES NOT INCLUDE BASEFLOW IF ANY.
02508>
02509> ----------------------------------------------------------------------
02510> 001:0011-------------------------------------------------------------
02511> ---------------------
02512> | ADD HYD (080   ) | ID: NHYD     AREA     QPEAK   TPEAK   R.V.    DWF
02513> ---------------------             (ha)     (cms)   (hrs)   (mm)    (cms)
02514>                    ID1 06:060      .89      .296    1.00   55.72    .000
02515>                   +ID2 07:070     2.66      .783    1.04   55.72    .000
02516>                    ==============================================
02517>                    SUM 08:080     3.55     1.060    1.04   55.72    .000
02518>
02519>    NOTE:  PEAK FLOWS DO NOT INCLUDE BASEFLOWS IF ANY.
02520>
02521> ----------------------------------------------------------------------
02522> 001:0012-------------------------------------------------------------
02523> ---------------------
02524> | ADD HYD (090   ) | ID: NHYD     AREA     QPEAK   TPEAK   R.V.    DWF
02525> ---------------------             (ha)     (cms)   (hrs)   (mm)    (cms)
02526>                    ID1 05:050     5.01     1.350    1.04   53.55    .000
02527>                   +ID2 08:080     3.55     1.060    1.04   55.72    .000
02528>                    ==============================================
02529>                    SUM 09:090     8.56     2.410    1.04   54.45    .000
02530>
02531>    NOTE:  PEAK FLOWS DO NOT INCLUDE BASEFLOWS IF ANY.
02532>
02533> ----------------------------------------------------------------------
02534> 001:0013-------------------------------------------------------------
02535> ---------------------
02536> | ROUTE RESERVOIR   |    Requested routing time step =  1.0 min.
02537> |  IN>09:(090   )   |
02538> | OUT<10:(POND  )   |    =========  OUTFLOW STORAGE TABLE  =========
02539> ---------------------    OUTFLOW    STORAGE  |  OUTFLOW    STORAGE
02540>                            (cms)    (ha.m.)  |   (cms)    (ha.m.)
02541>                            .000  .0000E+00   |    .593  .6251E+00
02542>                            .008  .6560E-01   |    .654  .6631E+00
02543>                            .017  .1311E+00   |    .797  .7391E+00
02544>                            .093  .2831E+00   |    .950  .8274E+00
02545>                            .233  .3971E+00   |   1.304  .9157E+00
02546>                            .337  .4731E+00   |   1.880  .1004E+01
02547>                            .465  .5491E+00   |   2.577  .1092E+01
02548>                            .531  .5871E+00   |    .000  .0000E+00
02549>
02550>      ROUTING RESULTS            AREA     QPEAK     TPEAK      R.V.
02551>      ---------------------      (ha)     (cms)     (hrs)      (mm)
02552>      INFLOW >09: (090   )       8.56     2.410     1.042    54.451
02553>      OUTFLOW<10: (POND  )       8.56      .189     2.056    54.449
02554>
02555>                    PEAK   FLOW   REDUCTION [Qout/Qin](%)=    7.838
02556>                    TIME SHIFT OF PEAK FLOW         (min)=    60.83
02557>                    MAXIMUM  STORAGE   USED       (ha.m.)=.3612E+00
02558>
02559> ----------------------------------------------------------------------
02560> 001:0014-------------------------------------------------------------
02561> ********************************************
02562> *     Remaining Hawthorne Industrial Park     *
02563> ********************************************
02564> *
02565> * SUB-AREA No.1
02566> ---------------------
02567> | CALIB STANDHYD    |   Area    (ha)=    19.90
02568> | 01:HIP01  DT= 2.50 |   Total Imp(%)=   71.00   Dir. Conn.(%)=   50.00
02569> ---------------------
02570>                                IMPERVIOUS    PERVIOUS (i)
02571>      Surface Area     (ha)=     14.13         5.77
02572>      Dep. Storage     (mm)=      1.57         4.67
02573>      Average Slope     (%)=       .60         1.50
02574>      Length           (m)=    580.00       100.00
02575>      Mannings n          =       .030         .250
02576>
02577>      Max.eff.Inten.(mm/hr)=    124.54        81.98
02578>                 over (min)      12.50        27.50
02579>      Storage Coeff.  (min)=     12.93 (ii)   27.37 (ii)
02580>      Unit Hyd. Tpeak (min)=     12.50        27.50
02581>      Unit Hyd. peak  (cms)=       .09         .04
02582>                                                          *TOTALS*
02583>      PEAK FLOW       (cms)=      2.16         .77         2.548 (iii)
02584>      TIME TO PEAK    (hrs)=      1.13        1.13         1.167
02585>      RUNOFF VOLUME    (mm)=     56.66       34.22        45.437
02586>      TOTAL RAINFALL   (mm)=     58.23       58.23        58.226
02587>      RUNOFF COEFFICIENT   =       .97         .59          .780
02588>
02589>        (i) CN PROCEDURE SELECTED FOR PERVIOUS LOSSES:
02590>            CN* =  81.0    Ia = Dep. Storage  (Above)
02591>       (ii) TIME STEP (DT) SHOULD BE SMALLER OR EQUAL
02592>            THAN THE STORAGE COEFFICIENT.
02593>      (iii) PEAK FLOW DOES NOT INCLUDE BASEFLOW IF ANY.
02594>
02595> ----------------------------------------------------------------------
02596> 001:0015-------------------------------------------------------------
02597> ---------------------
02598> | ADD HYD (HIP02 ) | ID: NHYD     AREA     QPEAK   TPEAK   R.V.    DWF
02599> ---------------------             (ha)     (cms)   (hrs)   (mm)    (cms)
02600>                    ID1 10:POND     8.56      .189    2.06   54.45    .000
02601>                   +ID2 01:HIP01   19.90     2.548    1.17   45.44    .000
02602>                    ==============================================
02603>                    SUM 02:HIP02   28.46     2.622    1.17   48.15    .000
02604>
02605>    NOTE:  PEAK FLOWS DO NOT INCLUDE BASEFLOWS IF ANY.
02606>
02607> ----------------------------------------------------------------------
02608> 001:0016-------------------------------------------------------------
02609> *
02610> * SUB-AREA No.2
02611> ---------------------
02612> | CALIB STANDHYD    |   Area    (ha)=    17.00
02613> | 03:HIP03  DT= 2.50 |   Total Imp(%)=   71.00   Dir. Conn.(%)=   50.00
02614> ---------------------
02615>                                IMPERVIOUS    PERVIOUS (i)
02616>      Surface Area     (ha)=     12.07         4.93
02617>      Dep. Storage     (mm)=      1.57         4.67
02618>      Average Slope     (%)=       .65         1.50
02619>      Length           (m)=    450.00       100.00
02620>      Mannings n          =       .030         .250
02621>
02622>      Max.eff.Inten.(mm/hr)=    144.69        87.13
02623>                 over (min)      10.00        25.00
02624>      Storage Coeff.  (min)=     10.21 (ii)   24.30 (ii)
02625>      Unit Hyd. Tpeak (min)=     10.00        25.00
02626>      Unit Hyd. peak  (cms)=       .11         .05
02627>                                                          *TOTALS*
02628>      PEAK FLOW       (cms)=      2.10         .71         2.398 (iii)
02629>      TIME TO PEAK    (hrs)=      1.08        1.38         1.125
02630>      RUNOFF VOLUME    (mm)=     56.66       34.22        45.437
02631>      TOTAL RAINFALL   (mm)=     58.23       58.23        58.226
02632>      RUNOFF COEFFICIENT   =       .97         .59          .780
02633>
02634>        (i) CN PROCEDURE SELECTED FOR PERVIOUS LOSSES:
02635>            CN* =  81.0    Ia = Dep. Storage  (Above)
02636>       (ii) TIME STEP (DT) SHOULD BE SMALLER OR EQUAL
02637>            THAN THE STORAGE COEFFICIENT.
02638>      (iii) PEAK FLOW DOES NOT INCLUDE BASEFLOW IF ANY.
02639>
02640> ----------------------------------------------------------------------
02641> 001:0017-------------------------------------------------------------
02642> *
02643> * SUB-AREA No.3
02644> ---------------------
02645> | CALIB STANDHYD    |   Area    (ha)=    15.60
02646> | 04:HIP04  DT= 2.50 |   Total Imp(%)=   71.00   Dir. Conn.(%)=   50.00
02647> ---------------------
02648>                                IMPERVIOUS    PERVIOUS (i)
02649>      Surface Area     (ha)=     11.08         4.52
02650>      Dep. Storage     (mm)=      1.57         4.67
02651>      Average Slope     (%)=       .50         1.50
02652>      Length           (m)=    600.00       100.00
02653>      Mannings n          =       .030         .250
02654>
02655>      Max.eff.Inten.(mm/hr)=    111.10        77.71
02656>                 over (min)      15.00        30.00
02657>      Storage Coeff.  (min)=     14.59 (ii)   29.34 (ii)
02658>      Unit Hyd. Tpeak (min)=     15.00        30.00
02659>      Unit Hyd. peak  (cms)=       .08         .04
02660>                                                          *TOTALS*
02661>      PEAK FLOW       (cms)=      1.57         .71         1.879 (iii)
02662>      TIME TO PEAK    (hrs)=      1.17        1.46         1.208
02663>      RUNOFF VOLUME    (mm)=     56.66       34.22        45.437
02664>      TOTAL RAINFALL   (mm)=     58.23       58.23        58.226
02665>      RUNOFF COEFFICIENT   =       .97         .59          .780
02666>
02667>        (i) CN PROCEDURE SELECTED FOR PERVIOUS LOSSES:
02668>            CN* =  81.0    Ia = Dep. Storage  (Above)
02669>       (ii) TIME STEP (DT) SHOULD BE SMALLER OR EQUAL
02670>            THAN THE STORAGE COEFFICIENT.
02671>      (iii) PEAK FLOW DOES NOT INCLUDE BASEFLOW IF ANY.
02672>
02673> ----------------------------------------------------------------------
02674> 001:0018-------------------------------------------------------------
02675> ---------------------
02676> | ADD HYD (HIP05 ) | ID: NHYD     AREA     QPEAK   TPEAK   R.V.    DWF
02677> ---------------------             (ha)     (cms)   (hrs)   (mm)    (cms)
02678>                    ID1 03:HIP03   17.00     2.398    1.13   45.44    .000
02679>                   +ID2 04:HIP04   15.60     1.879    1.21   45.44    .000
02680>                    ==============================================
02681>                    SUM 05:HIP05   32.60     4.157    1.13   45.44    .000
02682>
02683>    NOTE:  PEAK FLOWS DO NOT INCLUDE BASEFLOWS IF ANY.
02684>
02685> ----------------------------------------------------------------------
02686> 001:0019-------------------------------------------------------------
02687> ---------------------
02688> | ADD HYD (HIP06 ) | ID: NHYD     AREA     QPEAK   TPEAK   R.V.    DWF
02689> ---------------------             (ha)     (cms)   (hrs)   (mm)    (cms)
02690>                    ID1 05:HIP05   32.60     4.157    1.13   45.44    .000
02691>                   +ID2 02:HIP02   28.46     2.622    1.17   48.15    .000
02692>                    ==============================================
02693>                    SUM 06:HIP06   61.06     6.741    1.17   46.70    .000
02694>
02695>    NOTE:  PEAK FLOWS DO NOT INCLUDE BASEFLOWS IF ANY.
02696>
02697> ----------------------------------------------------------------------
02698> 001:0020-------------------------------------------------------------
02699> *
02700> * SUB-AREA No.4
```

```
---------------------
| CALIB STANDHYD      |    Area     (ha)=    12.20
| 07:HIP07  DT= 2.50 |    Total Imp(%)=    71.00   Dir. Conn.(%)=   50.00
---------------------
                              IMPERVIOUS     PERVIOUS (i)
     Surface Area      (ha)=      8.66          3.54
     Dep. Storage      (mm)=      1.57          4.67
     Average Slope      (%)=       .70          1.50
     Length             (m)=    210.00        100.00
     Mannings n            =      .030          .250

     Max.eff.Inten.(mm/hr)=    144.69        101.36
               over (min)         7.50         20.00
     Storage Coeff.   (min)=      6.32 (ii)    19.58 (ii)
     Unit Hyd. Tpeak  (min)=      7.50         20.00
     Unit Hyd. peak   (cms)=       .17           .06
                                                             *TOTALS*
     PEAK FLOW        (cms)=      1.86           .59          2.109 (iii)
     TIME TO PEAK     (hrs)=      1.04          1.29          1.042
     RUNOFF VOLUME     (mm)=     56.66         34.22         45.437
     TOTAL RAINFALL    (mm)=     58.23         58.23         58.226
     RUNOFF COEFFICIENT   =       .97           .59           .780

       (i) CN PROCEDURE SELECTED FOR PERVIOUS LOSSES:
           CN* =  81.0     Ia = Dep. Storage  (Above)
      (ii) TIME STEP (DT) SHOULD BE SMALLER OR EQUAL
           THAN THE STORAGE COEFFICIENT.
     (iii) PEAK FLOW DOES NOT INCLUDE BASEFLOW IF ANY.

--------------------------------------------------------------------------------
001:0021------------------------------------------------------------------------
*
*SUB-AREA No.5
---------------------
| DESIGN NASHYD       |    Area      (ha)=     4.00   Curve Number    (CN)=85.00
| 08:Pond-B DT= 2.50 |    Ia         (mm)=    4.670   # of Linear Res.(N)= 3.00
---------------------    U.H. Tp(hrs)=      .170

     Unit Hyd Qpeak  (cms)=      .899

     PEAK FLOW       (cms)=      .459 (i)
     TIME TO PEAK    (hrs)=     1.167
     RUNOFF VOLUME    (mm)=    29.155
     TOTAL RAINFALL   (mm)=    58.226
     RUNOFF COEFFICIENT   =      .501

     (i) PEAK FLOW DOES NOT INCLUDE BASEFLOW IF ANY.

--------------------------------------------------------------------------------
001:0022------------------------------------------------------------------------
--------------------
| ADD HYD (HIP08 ) | ID: NHYD       AREA      QPEAK    TPEAK   R.V.     DWF
--------------------                (ha)      (cms)    (hrs)   (mm)    (cms)
                  ID1 06:HIP06     61.06      6.741     1.17  46.70    .000
                 +ID2 07:HIP07     12.20      2.109     1.04  45.44    .000
                 +ID3 08:Pond-B     4.00       .459     1.17  29.15    .000
                 ==========================================================
                  SUM 09:HIP08     77.26      8.998     1.13  45.59    .000

   NOTE:  PEAK FLOWS DO NOT INCLUDE BASEFLOWS IF ANY.

--------------------------------------------------------------------------------
001:0023------------------------------------------------------------------------
---------------------
| ROUTE RESERVOIR     |     Requested routing time step =  1.0 min.
|   IN>09:(HIP08 )    |
| OUT<10:(HIP-PO)     |     =========  OUTLFOW STORAGE TABLE  ========
---------------------      OUTFLOW     STORAGE    |  OUTFLOW    STORAGE
                             (cms)     (ha.m.)    |   (cms)     (ha.m.)
                              .000  .0000E+00     |     .724  .2210E+01
                              .048  .5740E-01     |     .937  .2501E+01
                              .054  .2434E+00     |    1.262  .2798E+01
                              .059  .5834E+00     |    1.404  .3101E+01
                              .062  .8400E+00     |    1.532  .3410E+01
                              .064  .1102E+01     |    1.650  .3724E+01
                              .147  .1370E+01     |    2.409  .4044E+01
                              .280  .1644E+01     |    3.689  .4370E+01
                              .472  .1924E+01     |     .000  .0000E+00

     ROUTING RESULTS               AREA      QPEAK      TPEAK        R.V.
     --------------------          (ha)      (cms)      (hrs)        (mm)
     INFLOW >09: (HIP08 )         77.26      8.998      1.125      45.591
     OUTFLOW<10: (HIP-PO)         77.26      1.004      3.083      45.591

                   PEAK   FLOW   REDUCTION [Qout/Qin](%)=   11.160
                   TIME SHIFT OF PEAK FLOW          (min)=   117.50
                   MAXIMUM  STORAGE   USED        (ha.m.)=.2562E+01

--------------------------------------------------------------------------------
001:0024------------------------------------------------------------------------
*
*SUB-AREA No. 6
---------------------
| DESIGN NASHYD       |    Area      (ha)=     2.70   Curve Number    (CN)=76.00
| 01:A3      DT= 2.50 |    Ia         (mm)=    4.670   # of Linear Res.(N)= 3.00
---------------------    U.H. Tp(hrs)=      .800

     Unit Hyd Qpeak  (cms)=      .129

     PEAK FLOW       (cms)=      .079 (i)
     TIME TO PEAK    (hrs)=     2.000
     RUNOFF VOLUME    (mm)=    21.442
     TOTAL RAINFALL   (mm)=    58.226
     RUNOFF COEFFICIENT   =      .368

     (i) PEAK FLOW DOES NOT INCLUDE BASEFLOW IF ANY.

--------------------------------------------------------------------------------
001:0025------------------------------------------------------------------------
--------------------
| ADD HYD (Ultima) | ID: NHYD       AREA      QPEAK    TPEAK   R.V.     DWF
--------------------                (ha)      (cms)    (hrs)   (mm)    (cms)
                  ID1 10:HIP-PO    77.26      1.004     3.08  45.59    .000
                 +ID2 01:A3         2.70       .079     2.00  21.44    .000
                 ==========================================================
                  SUM 02:Ultima    79.96      1.051     3.01  44.78    .000

   NOTE:  PEAK FLOWS DO NOT INCLUDE BASEFLOWS IF ANY.

--------------------------------------------------------------------------------
001:0026------------------------------------------------------------------------
*****************************************************************
*        CALCULATION OF 3HR - 1:50 YEAR STORM EVENT             *
*****************************************************************
--------------------
| START              |   Project  dir.: V:\20983.DU\ENG\FINALS~1\SWMHYM~1\
--------------------    Rainfall dir.: V:\20983.DU\ENG\FINALS~1\SWMHYM~1\
     TZERO =     .00 hrs on        0
     METOUT=    2 (output = METRIC)
     NRUN  = 001
     NSTORM=    0
--------------------------------------------------------------------------------
001:0002------------------------------------------------------------------------
--------------------
| CHICAGO STORM      |     IDF curve parameters: A=1569.580
| Ptotal= 64.81 mm |                                 B=    6.014
--------------------                                 C=     .820
                          used in:    INTENSITY =  A / (t + B)^C

                          Duration of storm  =  3.00 hrs
                          Storm time step     = 10.00 min
                          Time to peak ratio =    .33

                TIME      RAIN |   TIME      RAIN |   TIME      RAIN |   TIME     RAIN
                 hrs     mm/hr |    hrs     mm/hr |    hrs     mm/hr |    hrs    mm/hr
                 .17     5.467 |   1.00   161.471 |   1.83    10.000 |   2.67    5.209
                 .33     6.820 |   1.17    48.876 |   2.00     8.397 |   2.83    4.774
                 .50     9.187 |   1.33    24.704 |   2.17     7.256 |   3.00    4.412
                 .67    14.441 |   1.50    16.495 |   2.33     6.403 |
                 .83    36.764 |   1.67    12.422 |   2.50     5.740 |

--------------------------------------------------------------------------------
001:0003------------------------------------------------------------------------
---------------------
| DEFAULT VALUES       |   Filename: V:\20983.DU\ENG\FINALS~1\SWMHYM~1\ORGA.VAL
---------------------    ICASEdv = 1 (read and print data)
     FileTitle= ------ ENTER YOUR COMMENTS ON THIS LINE AND THE NEXT ONE ---
                ------ PARAMETER VALUES MUST BE ENTERD AFTER COLUMN 60 ----□
     Horton's infiltration equation parameters:
     [Fo= 50.00 mm/hr] [Fc= 7.50 mm/hr] [DCAY= 2.00 /hr] [F=  .00 mm]
     Parameters for PERVIOUS surfaces in STANDHYD:
     [IAper=    4.67 mm] [LGP=40.00 m] [MNP= .250]
     Parameters for IMPERVIOUS surfaces in STANDHYD:
     [IAimp=    1.57 mm] [CLI= 1.50]    [MNI= .035]
     Parameters used in NASHYD:
     [Ia=    4.67 mm] [N= 3.00]
--------------------------------------------------------------------------------
001:0004------------------------------------------------------------------------
***********************************
*           ORGAWORLD FILE        *
***********************************
*
* SUB-AREA No.1
---------------------
| CALIB STANDHYD      |    Area     (ha)=     2.07
| 01:010     DT= 2.50 |    Total Imp(%)=    84.00   Dir. Conn.(%)=   84.00
---------------------
                              IMPERVIOUS     PERVIOUS (i)
     Surface Area      (ha)=      1.74           .33
     Dep. Storage      (mm)=      1.57          4.67
     Average Slope      (%)=       .52          1.00
     Length             (m)=    204.72         20.00
     Mannings n            =      .030          .250

     Max.eff.Inten.(mm/hr)=    161.47         62.27
               over (min)         7.50         12.50
     Storage Coeff.   (min)=      6.51 (ii)    13.44 (ii)
     Unit Hyd. Tpeak  (min)=      7.50         12.50
     Unit Hyd. peak   (cms)=       .16           .09
                                                             *TOTALS*
     PEAK FLOW        (cms)=       .59           .03           .609 (iii)
     TIME TO PEAK     (hrs)=      1.04          1.17          1.042
     RUNOFF VOLUME     (mm)=     63.24         30.21         57.952
     TOTAL RAINFALL    (mm)=     64.81         64.81         64.806
     RUNOFF COEFFICIENT   =       .98           .47           .894

       (i) CN PROCEDURE SELECTED FOR PERVIOUS LOSSES:
           CN* =  81.0     Ia = Dep. Storage  (Above)
      (ii) TIME STEP (DT) SHOULD BE SMALLER OR EQUAL
           THAN THE STORAGE COEFFICIENT.
     (iii) PEAK FLOW DOES NOT INCLUDE BASEFLOW IF ANY.

--------------------------------------------------------------------------------
001:0005------------------------------------------------------------------------
*
* SUB-AREA No.2
---------------------
| CALIB STANDHYD      |    Area     (ha)=     1.54
| 02:020     DT= 2.50 |    Total Imp(%)=    92.00   Dir. Conn.(%)=   92.00
---------------------
                              IMPERVIOUS     PERVIOUS (i)
     Surface Area      (ha)=      1.42           .12
     Dep. Storage      (mm)=      1.57          4.67
     Average Slope      (%)=       .50          1.00
     Length             (m)=    244.34          5.00
     Mannings n            =      .030          .030

     Max.eff.Inten.(mm/hr)=    161.47         78.73
               over (min)         7.50          7.50
     Storage Coeff.   (min)=      7.33 (ii)     8.10 (ii)
     Unit Hyd. Tpeak  (min)=      7.50          7.50
     Unit Hyd. peak   (cms)=       .15           .14
                                                             *TOTALS*
     PEAK FLOW        (cms)=       .46           .02           .475 (iii)
     TIME TO PEAK     (hrs)=      1.04          1.08          1.042
     RUNOFF VOLUME     (mm)=     63.24         30.21         60.594
     TOTAL RAINFALL    (mm)=     64.81         64.81         64.806
     RUNOFF COEFFICIENT   =       .98           .47           .935

       (i) CN PROCEDURE SELECTED FOR PERVIOUS LOSSES:
           CN* =  81.0     Ia = Dep. Storage  (Above)
      (ii) TIME STEP (DT) SHOULD BE SMALLER OR EQUAL
           THAN THE STORAGE COEFFICIENT.
     (iii) PEAK FLOW DOES NOT INCLUDE BASEFLOW IF ANY.

--------------------------------------------------------------------------------
001:0006------------------------------------------------------------------------
*
* SUB-AREA No.3
---------------------
| CALIB STANDHYD      |    Area     (ha)=     1.40
| 03:030     DT= 2.50 |    Total Imp(%)=    97.00   Dir. Conn.(%)=   97.00
---------------------
                              IMPERVIOUS     PERVIOUS (i)
     Surface Area      (ha)=      1.36           .04
     Dep. Storage      (mm)=      1.57          4.67
     Average Slope      (%)=       .51          1.00
     Length             (m)=    225.63          5.00
     Mannings n            =      .030          .030

     Max.eff.Inten.(mm/hr)=    161.47         78.73
               over (min)         7.50          7.50
     Storage Coeff.   (min)=      6.95 (ii)     7.72 (ii)
     Unit Hyd. Tpeak  (min)=      7.50          7.50
     Unit Hyd. peak   (cms)=       .16           .15
                                                             *TOTALS*
     PEAK FLOW        (cms)=       .45           .01           .454 (iii)
     TIME TO PEAK     (hrs)=      1.04          1.08          1.042
     RUNOFF VOLUME     (mm)=     63.24         30.21         62.245
     TOTAL RAINFALL    (mm)=     64.81         64.81         64.806
     RUNOFF COEFFICIENT   =       .98           .47           .960

       (i) CN PROCEDURE SELECTED FOR PERVIOUS LOSSES:
           CN* =  81.0     Ia = Dep. Storage  (Above)
      (ii) TIME STEP (DT) SHOULD BE SMALLER OR EQUAL
           THAN THE STORAGE COEFFICIENT.
     (iii) PEAK FLOW DOES NOT INCLUDE BASEFLOW IF ANY.

--------------------------------------------------------------------------------
001:0007------------------------------------------------------------------------
```

```
02971> ---------------------
02972> | ADD HYD (040   ) | ID: NHYD     AREA     QPEAK   TPEAK   R.V.    DWF
02973> ---------------------             (ha)     (cms)   (hrs)   (mm)    (cms)
02974>                    ID1 01:010      2.07     .609    1.04   57.95    .000
02975>                   +ID2 02:020      1.54     .475    1.04   60.59    .000
02976>                    ==================================================
02977>                    SUM 04:040      3.61    1.084    1.04   59.08    .000
02978>
02979>    NOTE:   PEAK FLOWS DO NOT INCLUDE BASEFLOWS IF ANY.
02980>
02981> ---------------------------------------------------------------------------
02982> 001:0008-------------------------------------------------------------------
02983> ---------------------
02984> | ADD HYD (050   ) | ID: NHYD     AREA     QPEAK   TPEAK   R.V.    DWF
02985> ---------------------             (ha)     (cms)   (hrs)   (mm)    (cms)
02986>                    ID1 03:030      1.40     .454    1.04   62.25    .000
02987>                   +ID2 04:040      3.61    1.084    1.04   59.08    .000
02988>                    ==================================================
02989>                    SUM 05:050      5.01    1.538    1.04   59.96    .000
02990>
02991>    NOTE:   PEAK FLOWS DO NOT INCLUDE BASEFLOWS IF ANY.
02992>
02993> ---------------------------------------------------------------------------
02994> 001:0009-------------------------------------------------------------------
02995> *
02996> * SUB-AREA No.4
02997> ----------------------
02998> | CALIB STANDHYD    |   Area    (ha)=     .89
02999> | 06:060     DT= 2.50 |   Total Imp(%)=   97.00   Dir. Conn.(%)=   97.00
03000> ----------------------
03001>                                IMPERVIOUS    PERVIOUS (i)
03002>      Surface Area      (ha)=       .86          .03
03003>      Dep. Storage      (mm)=      1.57         4.67
03004>      Average Slope      (%)=       .93          .70
03005>      Length            (m)=    164.82        40.00
03006>      Mannings n           =      .030         .250
03007>
03008>      Max.eff.Inten.(mm/hr)=    161.47        53.28
03009>                  over (min)      5.00        17.50
03010>      Storage Coeff.  (min)=      4.80 (ii)   17.24 (ii)
03011>      Unit Hyd. Tpeak (min)=      5.00        17.50
03012>      Unit Hyd. peak  (cms)=       .23          .07
03013>                                                          *TOTALS*
03014>      PEAK FLOW       (cms)=       .33          .00         .335 (iii)
03015>      TIME TO PEAK    (hrs)=      1.00         1.25        1.000
03016>      RUNOFF VOLUME    (mm)=     63.24        30.21       62.245
03017>      TOTAL RAINFALL   (mm)=     64.81        64.81       64.806
03018>      RUNOFF COEFFICIENT   =       .98          .47         .960
03019>
03020>        (i) CN PROCEDURE SELECTED FOR PERVIOUS LOSSES:
03021>            CN* =  81.0     Ia = Dep. Storage  (Above)
03022>       (ii) TIME STEP (DT) SHOULD BE SMALLER OR EQUAL
03023>            THAN THE STORAGE COEFFICIENT.
03024>      (iii) PEAK FLOW DOES NOT INCLUDE BASEFLOW IF ANY.
03025>
03026> ---------------------------------------------------------------------------
03027> 001:0010-------------------------------------------------------------------
03028> *
03029> * SUB-AREA No.5
03030> ----------------------
03031> | CALIB STANDHYD    |   Area    (ha)=    2.66
03032> | 07:070     DT= 2.50 |   Total Imp(%)=   97.00   Dir. Conn.(%)=   97.00
03033> ----------------------
03034>                                IMPERVIOUS    PERVIOUS (i)
03035>      Surface Area      (ha)=      2.58          .08
03036>      Dep. Storage      (mm)=      1.57         4.67
03037>      Average Slope      (%)=       .61         1.50
03038>      Length            (m)=    207.25        20.00
03039>      Mannings n           =      .030         .250
03040>
03041>      Max.eff.Inten.(mm/hr)=    161.47        62.27
03042>                  over (min)      7.50        12.50
03043>      Storage Coeff.  (min)=      6.26 (ii)   12.39 (ii)
03044>      Unit Hyd. Tpeak (min)=      7.50        12.50
03045>      Unit Hyd. peak  (cms)=       .17          .09
03046>                                                          *TOTALS*
03047>      PEAK FLOW       (cms)=       .88          .01         .886 (iii)
03048>      TIME TO PEAK    (hrs)=      1.04         1.17        1.042
03049>      RUNOFF VOLUME    (mm)=     63.24        30.21       62.245
03050>      TOTAL RAINFALL   (mm)=     64.81        64.81       64.806
03051>      RUNOFF COEFFICIENT   =       .98          .47         .960
03052>
03053>        (i) CN PROCEDURE SELECTED FOR PERVIOUS LOSSES:
03054>            CN* =  81.0     Ia = Dep. Storage  (Above)
03055>       (ii) TIME STEP (DT) SHOULD BE SMALLER OR EQUAL
03056>            THAN THE STORAGE COEFFICIENT.
03057>      (iii) PEAK FLOW DOES NOT INCLUDE BASEFLOW IF ANY.
03058>
03059> ---------------------------------------------------------------------------
03060> 001:0011-------------------------------------------------------------------
03061> ---------------------
03062> | ADD HYD (080   ) | ID: NHYD     AREA     QPEAK   TPEAK   R.V.    DWF
03063> ---------------------             (ha)     (cms)   (hrs)   (mm)    (cms)
03064>                    ID1 06:060       .89     .335    1.00   62.25    .000
03065>                   +ID2 07:070      2.66     .886    1.04   62.25    .000
03066>                    ==================================================
03067>                    SUM 08:080      3.55    1.197    1.04   62.25    .000
03068>
03069>    NOTE:   PEAK FLOWS DO NOT INCLUDE BASEFLOWS IF ANY.
03070>
03071> ---------------------------------------------------------------------------
03072> 001:0012-------------------------------------------------------------------
03073> ---------------------
03074> | ADD HYD (090   ) | ID: NHYD     AREA     QPEAK   TPEAK   R.V.    DWF
03075> ---------------------             (ha)     (cms)   (hrs)   (mm)    (cms)
03076>                    ID1 05:050      5.01    1.538    1.04   59.96    .000
03077>                   +ID2 08:080      3.55    1.197    1.04   62.25    .000
03078>                    ==================================================
03079>                    SUM 09:090      8.56    2.735    1.04   60.91    .000
03080>
03081>    NOTE:   PEAK FLOWS DO NOT INCLUDE BASEFLOWS IF ANY.
03082>
03083> ---------------------------------------------------------------------------
03084> 001:0013-------------------------------------------------------------------
03085> ---------------------
03086> | ROUTE RESERVOIR   |     Requested routing time step =  1.0 min.
03087> |  IN>09:(090   )   |
03088> | OUT<10:(POND  )   |     =========  OUTFLOW STORAGE TABLE  ========
03089> ---------------------     OUTFLOW    STORAGE   |  OUTFLOW    STORAGE
03090>                             (cms)    (ha.m.)   |   (cms)    (ha.m.)
03091>                              .000   .0000E+00   |    .593   .6251E+00
03092>                              .008   .6560E-01   |    .654   .6631E+00
03093>                              .017   .1311E+00   |    .797   .7391E+00
03094>                              .093   .2831E+00   |    .950   .8274E+00
03095>                              .233   .3971E+00   |   1.304   .9157E+00
03096>                              .337   .4731E+00   |   1.880   .1004E+01
03097>                              .465   .5491E+00   |   2.577   .1092E+01
03098>                              .531   .5871E+00   |    .000   .0000E+00
03099>
03100>      ROUTING RESULTS            AREA     QPEAK     TPEAK       R.V.
03101>      ---------------------      (ha)     (cms)     (hrs)       (mm)
03102>      INFLOW >09: (090   )      8.56     2.735     1.042     60.910
03103>      OUTFLOW<10: (POND  )      8.56      .233     1.944     60.908
03104>
03105>                    PEAK   FLOW   REDUCTION [Qout/Qin](%)=    8.503
03106>                    TIME SHIFT OF PEAK FLOW         (min)=    54.17
03107>                    MAXIMUM  STORAGE   USED       (ha.m.)=.3967E+00
03108>
03109> ---------------------------------------------------------------------------
03110> 001:0014-------------------------------------------------------------------
03111> ******************************************
03112> *     Remaining Hawthorne Industrial Park     *
03113> ******************************************
03114> *
03115> * SUB-AREA No.1
03116> ----------------------
03117> | CALIB STANDHYD    |   Area    (ha)=   19.90
03118> | 01:HIP01  DT= 2.50 |   Total Imp(%)=   71.00   Dir. Conn.(%)=   50.00
03119> ----------------------
03120>                                IMPERVIOUS    PERVIOUS (i)
03121>      Surface Area      (ha)=     14.13         5.77
03122>      Dep. Storage      (mm)=      1.57         4.67
03123>      Average Slope      (%)=       .60         1.50
03124>      Length            (m)=    580.00       100.00
03125>      Mannings n           =      .030         .250
03126>
03127>      Max.eff.Inten.(mm/hr)=    138.95       102.13
03128>                  over (min)     12.50        25.00
03129>      Storage Coeff.  (min)=     12.38 (ii)   25.60 (ii)
03130>      Unit Hyd. Tpeak (min)=     12.50        25.00
03131>      Unit Hyd. peak  (cms)=       .09          .04
03132>                                                          *TOTALS*
03133>      PEAK FLOW       (cms)=      2.46          .95        3.001 (iii)
03134>      TIME TO PEAK    (hrs)=      1.13         1.38        1.167
03135>      RUNOFF VOLUME    (mm)=     63.24        39.90       51.566
03136>      TOTAL RAINFALL   (mm)=     64.81        64.81       64.806
03137>      RUNOFF COEFFICIENT   =       .98          .62         .796
03138>
03139>        (i) CN PROCEDURE SELECTED FOR PERVIOUS LOSSES:
03140>            CN* =  81.0     Ia = Dep. Storage  (Above)
03141>       (ii) TIME STEP (DT) SHOULD BE SMALLER OR EQUAL
03142>            THAN THE STORAGE COEFFICIENT.
03143>      (iii) PEAK FLOW DOES NOT INCLUDE BASEFLOW IF ANY.
03144>
03145> ---------------------------------------------------------------------------
03146> 001:0015-------------------------------------------------------------------
03147> ---------------------
03148> | ADD HYD (HIP02 ) | ID: NHYD     AREA     QPEAK   TPEAK   R.V.    DWF
03149> ---------------------             (ha)     (cms)   (hrs)   (mm)    (cms)
03150>                    ID1 10:POND      8.56     .233    1.94   60.91    .000
03151>                   +ID2 01:HIP01    19.90    3.001    1.17   51.57    .000
03152>                    ==================================================
03153>                    SUM 02:HIP02    28.46    3.092    1.17   54.37    .000
03154>
03155>    NOTE:   PEAK FLOWS DO NOT INCLUDE BASEFLOWS IF ANY.
03156>
03157> ---------------------------------------------------------------------------
03158> 001:0016-------------------------------------------------------------------
03159> *
03160> * SUB-AREA No.2
03161> ----------------------
03162> | CALIB STANDHYD    |   Area    (ha)=   17.00
03163> | 03:HIP03  DT= 2.50 |   Total Imp(%)=   71.00   Dir. Conn.(%)=   50.00
03164> ----------------------
03165>                                IMPERVIOUS    PERVIOUS (i)
03166>      Surface Area      (ha)=     12.07         4.93
03167>      Dep. Storage      (mm)=      1.57         4.67
03168>      Average Slope      (%)=       .65         1.50
03169>      Length            (m)=    450.00       100.00
03170>      Mannings n           =      .030         .250
03171>
03172>      Max.eff.Inten.(mm/hr)=    161.47       109.61
03173>                  over (min)     10.00        22.50
03174>      Storage Coeff.  (min)=      9.77 (ii)   22.63 (ii)
03175>      Unit Hyd. Tpeak (min)=     10.00        22.50
03176>      Unit Hyd. peak  (cms)=       .11          .05
03177>                                                          *TOTALS*
03178>      PEAK FLOW       (cms)=      2.38          .88        2.819 (iii)
03179>      TIME TO PEAK    (hrs)=      1.08         1.33        1.125
03180>      RUNOFF VOLUME    (mm)=     63.24        39.90       51.566
03181>      TOTAL RAINFALL   (mm)=     64.81        64.81       64.806
03182>      RUNOFF COEFFICIENT   =       .98          .62         .796
03183>
03184>        (i) CN PROCEDURE SELECTED FOR PERVIOUS LOSSES:
03185>            CN* =  81.0     Ia = Dep. Storage  (Above)
03186>       (ii) TIME STEP (DT) SHOULD BE SMALLER OR EQUAL
03187>            THAN THE STORAGE COEFFICIENT.
03188>      (iii) PEAK FLOW DOES NOT INCLUDE BASEFLOW IF ANY.
03189>
03190> ---------------------------------------------------------------------------
03191> 001:0017-------------------------------------------------------------------
03192> *
03193> * SUB-AREA No.3
03194> ----------------------
03195> | CALIB STANDHYD    |   Area    (ha)=   15.60
03196> | 04:HIP04  DT= 2.50 |   Total Imp(%)=   71.00   Dir. Conn.(%)=   50.00
03197> ----------------------
03198>                                IMPERVIOUS    PERVIOUS (i)
03199>      Surface Area      (ha)=     11.08         4.52
03200>      Dep. Storage      (mm)=      1.57         4.67
03201>      Average Slope      (%)=       .50         1.50
03202>      Length            (m)=    600.00       100.00
03203>      Mannings n           =      .030         .250
03204>
03205>      Max.eff.Inten.(mm/hr)=    138.95        96.02
03206>                  over (min)     12.50        27.50
03207>      Storage Coeff.  (min)=     13.34 (ii)   26.90 (ii)
03208>      Unit Hyd. Tpeak (min)=     12.50        27.50
03209>      Unit Hyd. peak  (cms)=       .09          .04
03210>                                                          *TOTALS*
03211>      PEAK FLOW       (cms)=      1.86          .72        2.237 (iii)
03212>      TIME TO PEAK    (hrs)=      1.13         1.13        1.167
03213>      RUNOFF VOLUME    (mm)=     63.24        39.90       51.566
03214>      TOTAL RAINFALL   (mm)=     64.81        64.81       64.806
03215>      RUNOFF COEFFICIENT   =       .98          .62         .796
03216>
03217>        (i) CN PROCEDURE SELECTED FOR PERVIOUS LOSSES:
03218>            CN* =  81.0     Ia = Dep. Storage  (Above)
03219>       (ii) TIME STEP (DT) SHOULD BE SMALLER OR EQUAL
03220>            THAN THE STORAGE COEFFICIENT.
03221>      (iii) PEAK FLOW DOES NOT INCLUDE BASEFLOW IF ANY.
03222>
03223> ---------------------------------------------------------------------------
03224> 001:0018-------------------------------------------------------------------
03225> ---------------------
03226> | ADD HYD (HIP05 ) | ID: NHYD     AREA     QPEAK   TPEAK   R.V.    DWF
03227> ---------------------             (ha)     (cms)   (hrs)   (mm)    (cms)
03228>                    ID1 03:HIP03    17.00    2.819    1.13   51.57    .000
03229>                   +ID2 04:HIP04    15.60    2.237    1.17   51.57    .000
03230>                    ==================================================
03231>                    SUM 05:HIP05    32.60    5.019    1.13   51.57    .000
03232>
03233>    NOTE:   PEAK FLOWS DO NOT INCLUDE BASEFLOWS IF ANY.
03234>
03235> ---------------------------------------------------------------------------
03236> 001:0019-------------------------------------------------------------------
03237> ---------------------
03238> | ADD HYD (HIP06 ) | ID: NHYD     AREA     QPEAK   TPEAK   R.V.    DWF
03239> ---------------------             (ha)     (cms)   (hrs)   (mm)    (cms)
03240>                    ID1 05:HIP05    32.60    5.019    1.13   51.57    .000
```

```
03241>                +ID2 02:HIP02     28.46    3.092    1.17  54.37    .000
03242>                 ==================================================
03243>                 SUM 06:HIP06     61.06    8.054    1.13  52.87    .000
03244>
03245>    NOTE:  PEAK FLOWS DO NOT INCLUDE BASEFLOWS IF ANY.
03246>
03247> ------------------------------------------------------------------------
03248> 001:0020-----------------------------------------------------------------
03249> *
03250> * SUB-AREA No.4
03251> ---------------------
03252> | CALIB STANDHYD     |   Area     (ha)=   12.20
03253> | 07:HIP07  DT= 2.50 |   Total Imp(%)=   71.00   Dir. Conn.(%)=   50.00
03254> ---------------------
03255>                                  IMPERVIOUS    PERVIOUS (i)
03256>      Surface Area      (ha)=        8.66          3.54
03257>      Dep. Storage      (mm)=        1.57          4.67
03258>      Average Slope      (%)=         .70          1.50
03259>      Length             (m)=      210.00        100.00
03260>      Mannings n          =         .030          .250
03261>
03262>      Max.eff.Inten.(mm/hr)=      161.47        126.32
03263>                 over (min)        5.00         17.50
03264>      Storage Coeff.  (min)=        6.05 (ii)    18.19 (ii)
03265>      Unit Hyd. Tpeak (min)=        5.00         17.50
03266>      Unit Hyd. peak  (cms)=         .20           .06
03267>                                                          *TOTALS*
03268>      PEAK FLOW       (cms)=        2.19           .73       2.470 (iii)
03269>      TIME TO PEAK    (hrs)=        1.00          1.25        1.042
03270>      RUNOFF VOLUME    (mm)=       63.24         39.90       51.566
03271>      TOTAL RAINFALL   (mm)=       64.81         64.81       64.806
03272>      RUNOFF COEFFICIENT  =         .98           .62         .796
03273>
03274>        (i) CN PROCEDURE SELECTED FOR PERVIOUS LOSSES:
03275>            CN* =  81.0    Ia = Dep. Storage  (Above)
03276>       (ii) TIME STEP (DT) SHOULD BE SMALLER OR EQUAL
03277>            THAN THE STORAGE COEFFICIENT.
03278>      (iii) PEAK FLOW DOES NOT INCLUDE BASEFLOW IF ANY.
03279>
03280> ------------------------------------------------------------------------
03281> 001:0021-----------------------------------------------------------------
03282> *
03283> *SUB-AREA No.5
03284> ---------------------
03285> | DESIGN NASHYD      |   Area     (ha)=    4.00   Curve Number   (CN)=85.00
03286> | 08:Pond-B DT= 2.50 |   Ia       (mm)=   4.670   # of Linear Res.(N)= 3.00
03287> ---------------------   U.H. Tp(hrs)=    .170
03288>
03289>      Unit Hyd Qpeak  (cms)=      .899
03290>
03291>      PEAK FLOW       (cms)=      .551 (i)
03292>      TIME TO PEAK    (hrs)=     1.125
03293>      RUNOFF VOLUME    (mm)=    34.455
03294>      TOTAL RAINFALL   (mm)=    64.806
03295>      RUNOFF COEFFICIENT  =       .532
03296>
03297>      (i) PEAK FLOW DOES NOT INCLUDE BASEFLOW IF ANY.
03298>
03299> ------------------------------------------------------------------------
03300> 001:0022-----------------------------------------------------------------
03301> --------------------
03302> | ADD HYD (HIP08 ) | ID: NHYD     AREA     QPEAK    TPEAK    R.V.     DWF
03303> --------------------              (ha)     (cms)    (hrs)    (mm)    (cms)
03304>                    ID1 06:HIP06   61.06    8.054     1.13   52.87    .000
03305>                   +ID2 07:HIP07   12.20    2.470     1.04   51.57    .000
03306>                   +ID3 08:Pond-B   4.00     .551     1.13   34.45    .000
03307>                    ==================================================
03308>                    SUM 09:HIP08   77.26   10.570     1.13   51.71    .000
03309>
03310>    NOTE:  PEAK FLOWS DO NOT INCLUDE BASEFLOWS IF ANY.
03311>
03312> ------------------------------------------------------------------------
03313> 001:0023-----------------------------------------------------------------
03314> ---------------------
03315> | ROUTE RESERVOIR    |    Requested routing time step =  1.0 min.
03316> |  IN>09:(HIP08 )    |
03317> | OUT<10:(HIP-PO)    |    ========  OUTFLOW STORAGE TABLE  ========
03318> ---------------------    OUTFLOW    STORAGE  |  OUTFLOW    STORAGE
03319>                            (cms)    (ha.m.)  |    (cms)    (ha.m.)
03320>                             .000  .0000E+00  |     .724  .2210E+01
03321>                             .048  .5740E-01  |     .937  .2501E+01
03322>                             .054  .2434E+00  |    1.262  .2798E+01
03323>                             .059  .5834E+00  |    1.404  .3101E+01
03324>                             .062  .8400E+00  |    1.532  .3410E+01
03325>                             .064  .1102E+01  |    1.650  .3724E+01
03326>                             .147  .1370E+01  |    2.409  .4044E+01
03327>                             .280  .1644E+01  |    3.689  .4370E+01
03328>                             .472  .1924E+01  |     .000  .0000E+00
03329>
03330>      ROUTING RESULTS            AREA     QPEAK     TPEAK       R.V.
03331>      ---------------------      (ha)     (cms)     (hrs)       (mm)
03332>      INFLOW >09: (HIP08 )      77.26    10.570     1.125     51.714
03333>      OUTFLOW<10: (HIP-PO)      77.26     1.280     2.917     51.714
03334>
03335>                   PEAK   FLOW   REDUCTION [Qout/Qin](%)=   12.106
03336>                   TIME SHIFT OF PEAK FLOW         (min)=   107.50
03337>                   MAXIMUM  STORAGE   USED       (ha.m.)=.2836E+01
03338>
03339> ------------------------------------------------------------------------
03340> 001:0024-----------------------------------------------------------------
03341> *
03342> *SUB-AREA No. 6
03343> ---------------------
03344> | DESIGN NASHYD      |   Area     (ha)=    2.70   Curve Number   (CN)=76.00
03345> | 01:A3     DT= 2.50 |   Ia       (mm)=   4.670   # of Linear Res.(N)= 3.00
03346> ---------------------   U.H. Tp(hrs)=    .800
03347>
03348>      Unit Hyd Qpeak  (cms)=      .129
03349>
03350>      PEAK FLOW       (cms)=      .096 (i)
03351>      TIME TO PEAK    (hrs)=     1.958
03352>      RUNOFF VOLUME    (mm)=    25.767
03353>      TOTAL RAINFALL   (mm)=    64.806
03354>      RUNOFF COEFFICIENT  =       .398
03355>
03356>      (i) PEAK FLOW DOES NOT INCLUDE BASEFLOW IF ANY.
03357>
03358> ------------------------------------------------------------------------
03359> 001:0025-----------------------------------------------------------------
03360> --------------------
03361> | ADD HYD (Ultima) | ID: NHYD     AREA     QPEAK    TPEAK    R.V.     DWF
03362> --------------------              (ha)     (cms)    (hrs)    (mm)    (cms)
03363>                    ID1 10:HIP-PO  77.26    1.280     2.92   51.71    .000
03364>                   +ID2 01:A3       2.70     .096     1.96   25.77    .000
03365>                    ==================================================
03366>                    SUM 02:Ultima  79.96    1.348     2.63   50.84    .000
03367>
03368>    NOTE:  PEAK FLOWS DO NOT INCLUDE BASEFLOWS IF ANY.
03369>
03370> ------------------------------------------------------------------------
03371> 001:0026-----------------------------------------------------------------
03372> ************************************************************
03373> *       CALCULATION OF 3HR - 1:100 YEAR STORM EVENT        *
03374> ************************************************************
03375> --------------------
03376> | START              |  Project  dir.: V:\20983.DU\ENG\FINALS~1\SWMHYM~1\
03377> --------------------  Rainfall  dir.: V:\20983.DU\ENG\FINALS~1\SWMHYM~1\
03378>     TZERO =   .00 hrs on        0
03379>     METOUT=   2 (output = METRIC)
03380>     NRUN  = 001
03381>     NSTORM=   0
03382> ------------------------------------------------------------------------
03383> 001:0002-----------------------------------------------------------------
03384> ---------------------
03385> | CHICAGO STORM    |    IDF curve parameters: A=1735.688
03386> | Ptotal= 71.66 mm |                          B=    6.014
03387> ---------------------                          C=     .820
03388>                          used in:   INTENSITY =  A / (t + B)^C
03389>
03390>                          Duration of storm  =  3.00 hrs
03391>                          Storm time step    = 10.00 min
03392>                          Time to peak ratio =   .33
03393>
03394>              TIME    RAIN |   TIME    RAIN |   TIME    RAIN |   TIME    RAIN
03395>              hrs   mm/hr |   hrs   mm/hr |   hrs   mm/hr |   hrs   mm/hr
03396>               .17   6.046 |  1.00 178.559 |  1.83  11.059 |  2.67   5.760
03397>               .33   7.542 |  1.17  54.049 |  2.00   9.285 |  2.83   5.280
03398>               .50  10.159 |  1.33  27.319 |  2.17   8.024 |  3.00   4.879
03399>               .67  15.969 |  1.50  18.240 |  2.33   7.080 |
03400>               .83  40.655 |  1.67  13.737 |  2.50   6.347 |
03401>
03402> ------------------------------------------------------------------------
03403> 001:0003-----------------------------------------------------------------
03404> ---------------------
03405> | DEFAULT VALUES     |  Filename: V:\20983.DU\ENG\FINALS~1\SWMHYM~1\ORGA.VAL
03406> ---------------------  ICASEdv = 1 (read and print data)
03407>      FileTitle= ------ ENTER YOUR COMMENTS ON THIS LINE AND THE NEXT ONE ---
03408>                        ------ PARAMETER VALUES MUST BE ENTERD AFTER COLUMN 60 ----
03409>      Horton's infiltration equation parameters:
03410>      [Fo= 50.00 mm/hr] [Fc= 7.50 mm/hr] [DCAY= 2.00 /hr] [F=  .00 mm]
03411>      Parameters for PERVIOUS surfaces in STANDHYD:
03412>      [IAper=   4.67 mm] [LGP=40.00 m] [MNP= .250]
03413>      Parameters for IMPERVIOUS surfaces in STANDHYD:
03414>      [IAimp=   1.57 mm] [CLI= 1.50]   [MNI= .035]
03415>      Parameters used in NASHYD:
03416>      [Ia=   4.67 mm] [N= 3.00]
03417> ------------------------------------------------------------------------
03418> 001:0004-----------------------------------------------------------------
03419> ************************************
03420> *          ORGAWORLD FILE          *
03421> ************************************
03422> *
03423> * SUB-AREA No.1
03424> ---------------------
03425> | CALIB STANDHYD     |   Area     (ha)=    2.07
03426> | 01:010    DT= 2.50 |   Total Imp(%)=   84.00   Dir. Conn.(%)=   84.00
03427> ---------------------
03428>                                  IMPERVIOUS    PERVIOUS (i)
03429>      Surface Area      (ha)=        1.74           .33
03430>      Dep. Storage      (mm)=        1.57          4.67
03431>      Average Slope      (%)=         .52          1.00
03432>      Length             (m)=      204.72         20.00
03433>      Mannings n          =         .030          .250
03434>
03435>      Max.eff.Inten.(mm/hr)=      178.56         74.05
03436>                 over (min)        7.50         12.50
03437>      Storage Coeff.  (min)=        6.26 (ii)    12.72 (ii)
03438>      Unit Hyd. Tpeak (min)=        7.50         12.50
03439>      Unit Hyd. peak  (cms)=         .17           .09
03440>                                                          *TOTALS*
03441>      PEAK FLOW       (cms)=         .66           .04        .685 (iii)
03442>      TIME TO PEAK    (hrs)=        1.04          1.17       1.042
03443>      RUNOFF VOLUME    (mm)=       70.09         35.46      64.553
03444>      TOTAL RAINFALL   (mm)=       71.66         71.66      71.665
03445>      RUNOFF COEFFICIENT  =         .98           .49        .901
03446>
03447>        (i) CN PROCEDURE SELECTED FOR PERVIOUS LOSSES:
03448>            CN* =  81.0    Ia = Dep. Storage  (Above)
03449>       (ii) TIME STEP (DT) SHOULD BE SMALLER OR EQUAL
03450>            THAN THE STORAGE COEFFICIENT.
03451>      (iii) PEAK FLOW DOES NOT INCLUDE BASEFLOW IF ANY.
03452>
03453> ------------------------------------------------------------------------
03454> 001:0005-----------------------------------------------------------------
03455> *
03456> * SUB-AREA No.2
03457> ---------------------
03458> | CALIB STANDHYD     |   Area     (ha)=    1.54
03459> | 02:020    DT= 2.50 |   Total Imp(%)=   92.00   Dir. Conn.(%)=   92.00
03460> ---------------------
03461>                                  IMPERVIOUS    PERVIOUS (i)
03462>      Surface Area      (ha)=        1.42           .12
03463>      Dep. Storage      (mm)=        1.57          4.67
03464>      Average Slope      (%)=         .50          1.00
03465>      Length             (m)=      244.34          5.00
03466>      Mannings n          =         .030          .030
03467>
03468>      Max.eff.Inten.(mm/hr)=      178.56         93.23
03469>                 over (min)        7.50          7.50
03470>      Storage Coeff.  (min)=        7.04 (ii)     7.76 (ii)
03471>      Unit Hyd. Tpeak (min)=        7.50          7.50
03472>      Unit Hyd. peak  (cms)=         .16           .15
03473>                                                          *TOTALS*
03474>      PEAK FLOW       (cms)=         .51           .02        .534 (iii)
03475>      TIME TO PEAK    (hrs)=        1.04          1.08       1.042
03476>      RUNOFF VOLUME    (mm)=       70.09         35.46      67.324
03477>      TOTAL RAINFALL   (mm)=       71.66         71.66      71.665
03478>      RUNOFF COEFFICIENT  =         .98           .49        .939
03479>
03480>        (i) CN PROCEDURE SELECTED FOR PERVIOUS LOSSES:
03481>            CN* =  81.0    Ia = Dep. Storage  (Above)
03482>       (ii) TIME STEP (DT) SHOULD BE SMALLER OR EQUAL
03483>            THAN THE STORAGE COEFFICIENT.
03484>      (iii) PEAK FLOW DOES NOT INCLUDE BASEFLOW IF ANY.
03485>
03486> ------------------------------------------------------------------------
03487> 001:0006-----------------------------------------------------------------
03488> *
03489> * SUB-AREA No.3
03490> ---------------------
03491> | CALIB STANDHYD     |   Area     (ha)=    1.40
03492> | 03:030    DT= 2.50 |   Total Imp(%)=   97.00   Dir. Conn.(%)=   97.00
03493> ---------------------
03494>                                  IMPERVIOUS    PERVIOUS (i)
03495>      Surface Area      (ha)=        1.36           .04
03496>      Dep. Storage      (mm)=        1.57          4.67
03497>      Average Slope      (%)=         .51          1.00
03498>      Length             (m)=      225.63          5.00
03499>      Mannings n          =         .030          .030
03500>
03501>      Max.eff.Inten.(mm/hr)=      178.56         93.23
03502>                 over (min)        7.50          7.50
03503>      Storage Coeff.  (min)=        6.67 (ii)     7.39 (ii)
03504>      Unit Hyd. Tpeak (min)=        7.50          7.50
03505>      Unit Hyd. peak  (cms)=         .16           .15
03506>                                                          *TOTALS*
03507>      PEAK FLOW       (cms)=         .50           .01        .509 (iii)
03508>      TIME TO PEAK    (hrs)=        1.04          1.08       1.042
03509>      RUNOFF VOLUME    (mm)=       70.09         35.46      69.056
03510>      TOTAL RAINFALL   (mm)=       71.66         71.66      71.665
```

```
03511>      RUNOFF COEFFICIENT   =        .98          .49          .964
03512>
03513>        (i) CN PROCEDURE SELECTED FOR PERVIOUS LOSSES:
03514>            CN* =  81.0     Ia = Dep. Storage  (Above)
03515>       (ii) TIME STEP (DT) SHOULD BE SMALLER OR EQUAL
03516>            THAN THE STORAGE COEFFICIENT.
03517>      (iii) PEAK FLOW DOES NOT INCLUDE BASEFLOW IF ANY.
03518>
03519> ---------------------------------------------------------------------------
03520> 001:0007-------------------------------------------------------------------
03521> --------------------
03522> | ADD HYD (040   ) | ID: NHYD     AREA     QPEAK   TPEAK   R.V.    DWF
03523> --------------------                (ha)     (cms)   (hrs)   (mm)   (cms)
03524>                    ID1 01:010      2.07      .685    1.04  64.55    .000
03525>                   +ID2 02:020      1.54      .534    1.04  67.32    .000
03526>                    ==================================================
03527>                    SUM 04:040      3.61     1.220    1.04  65.74    .000
03528>
03529>    NOTE:  PEAK FLOWS DO NOT INCLUDE BASEFLOWS IF ANY.
03530>
03531> ---------------------------------------------------------------------------
03532> 001:0008-------------------------------------------------------------------
03533> --------------------
03534> | ADD HYD (050   ) | ID: NHYD     AREA     QPEAK   TPEAK   R.V.    DWF
03535> --------------------                (ha)     (cms)   (hrs)   (mm)   (cms)
03536>                    ID1 03:030      1.40      .509    1.04  69.06    .000
03537>                   +ID2 04:040      3.61     1.220    1.04  65.74    .000
03538>                    ==================================================
03539>                    SUM 05:050      5.01     1.729    1.04  66.66    .000
03540>
03541>    NOTE:  PEAK FLOWS DO NOT INCLUDE BASEFLOWS IF ANY.
03542>
03543> ---------------------------------------------------------------------------
03544> 001:0009-------------------------------------------------------------------
03545> *
03546> * SUB-AREA No.4
03547> ----------------------
03548> | CALIB STANDHYD    |   Area    (ha)=     .89
03549> | 06:060     DT= 2.50 |   Total Imp(%)=   97.00   Dir. Conn.(%)=   97.00
03550> ----------------------
03551>                                IMPERVIOUS    PERVIOUS (i)
03552>      Surface Area     (ha)=        .86          .03
03553>      Dep. Storage     (mm)=       1.57         4.67
03554>      Average Slope     (%)=        .93          .70
03555>      Length            (m)=     164.82        40.00
03556>      Mannings n          =        .030         .250
03557>
03558>      Max.eff.Inten.(mm/hr)=     178.56        67.61
03559>                 over (min)        5.00        15.00
03560>      Storage Coeff.  (min)=       4.62 (ii)   15.92 (ii)
03561>      Unit Hyd. Tpeak (min)=       5.00        15.00
03562>      Unit Hyd. peak  (cms)=        .24          .07
03563>                                                          *TOTALS*
03564>      PEAK FLOW       (cms)=        .37          .00        .374 (iii)
03565>      TIME TO PEAK    (hrs)=       1.00         1.21       1.000
03566>      RUNOFF VOLUME    (mm)=      70.09        35.46      69.056
03567>      TOTAL RAINFALL   (mm)=      71.66        71.66      71.665
03568>      RUNOFF COEFFICIENT   =        .98          .49        .964
03569>
03570>        (i) CN PROCEDURE SELECTED FOR PERVIOUS LOSSES:
03571>            CN* =  81.0     Ia = Dep. Storage  (Above)
03572>       (ii) TIME STEP (DT) SHOULD BE SMALLER OR EQUAL
03573>            THAN THE STORAGE COEFFICIENT.
03574>      (iii) PEAK FLOW DOES NOT INCLUDE BASEFLOW IF ANY.
03575>
03576> ---------------------------------------------------------------------------
03577> 001:0010-------------------------------------------------------------------
03578> *
03579> * SUB-AREA No.5
03580> ----------------------
03581> | CALIB STANDHYD    |   Area    (ha)=    2.66
03582> | 07:070     DT= 2.50 |   Total Imp(%)=   97.00   Dir. Conn.(%)=   97.00
03583> ----------------------
03584>                                IMPERVIOUS    PERVIOUS (i)
03585>      Surface Area     (ha)=       2.58          .08
03586>      Dep. Storage     (mm)=       1.57         4.67
03587>      Average Slope     (%)=        .61         1.50
03588>      Length            (m)=     207.25        20.00
03589>      Mannings n          =        .030         .250
03590>
03591>      Max.eff.Inten.(mm/hr)=     178.56        74.05
03592>                 over (min)        5.00        12.50
03593>      Storage Coeff.  (min)=       6.01 (ii)   11.73 (ii)
03594>      Unit Hyd. Tpeak (min)=       5.00        12.50
03595>      Unit Hyd. peak  (cms)=        .20          .09
03596>                                                          *TOTALS*
03597>      PEAK FLOW       (cms)=       1.03          .01       1.034 (iii)
03598>      TIME TO PEAK    (hrs)=       1.00         1.17       1.000
03599>      RUNOFF VOLUME    (mm)=      70.09        35.46      69.056
03600>      TOTAL RAINFALL   (mm)=      71.66        71.66      71.665
03601>      RUNOFF COEFFICIENT   =        .98          .49        .964
03602>
03603>        (i) CN PROCEDURE SELECTED FOR PERVIOUS LOSSES:
03604>            CN* =  81.0     Ia = Dep. Storage  (Above)
03605>       (ii) TIME STEP (DT) SHOULD BE SMALLER OR EQUAL
03606>            THAN THE STORAGE COEFFICIENT.
03607>      (iii) PEAK FLOW DOES NOT INCLUDE BASEFLOW IF ANY.
03608>
03609> ---------------------------------------------------------------------------
03610> 001:0011-------------------------------------------------------------------
03611> --------------------
03612> | ADD HYD (080   ) | ID: NHYD     AREA     QPEAK   TPEAK   R.V.    DWF
03613> --------------------                (ha)     (cms)   (hrs)   (mm)   (cms)
03614>                    ID1 06:060       .89      .374    1.00  69.06    .000
03615>                   +ID2 07:070      2.66     1.034    1.00  69.06    .000
03616>                    ==================================================
03617>                    SUM 08:080      3.55     1.408    1.00  69.06    .000
03618>
03619>    NOTE:  PEAK FLOWS DO NOT INCLUDE BASEFLOWS IF ANY.
03620>
03621> ---------------------------------------------------------------------------
03622> 001:0012-------------------------------------------------------------------
03623> --------------------
03624> | ADD HYD (090   ) | ID: NHYD     AREA     QPEAK   TPEAK   R.V.    DWF
03625> --------------------                (ha)     (cms)   (hrs)   (mm)   (cms)
03626>                    ID1 05:050      5.01     1.729    1.04  66.66    .000
03627>                   +ID2 08:080      3.55     1.408    1.00  69.06    .000
03628>                    ==================================================
03629>                    SUM 09:090      8.56     3.067    1.04  67.66    .000
03630>
03631>    NOTE:  PEAK FLOWS DO NOT INCLUDE BASEFLOWS IF ANY.
03632>
03633> ---------------------------------------------------------------------------
03634> 001:0013-------------------------------------------------------------------
03635> --------------------
03636> | ROUTE RESERVOIR   |     Requested routing time step =  1.0 min.
03637> |  IN>09:(090   )   |
03638> | OUT<10:(POND  )   |     =========  OUTFLOW STORAGE TABLE  =========
03639> --------------------     OUTFLOW     STORAGE  |  OUTFLOW    STORAGE
03640>                            (cms)    (ha.m.)   |   (cms)    (ha.m.)
03641>                             .000   .0000E+00   |    .593   .6251E+00
03642>                             .008   .6560E-01   |    .654   .6631E+00
03643>                             .017   .1311E+00   |    .797   .7391E+00
03644>                             .093   .2831E+00   |    .950   .8274E+00
03645>                             .233   .3971E+00   |   1.304   .9157E+00
03646>                             .337   .4731E+00   |   1.880   .1004E+01
03647>                             .465   .5491E+00   |   2.577   .1092E+01
03648>                             .531   .5871E+00   |    .000   .0000E+00
03649>
03650>      ROUTING RESULTS              AREA     QPEAK     TPEAK       R.V.
03651>      --------------------         (ha)     (cms)     (hrs)       (mm)
03652>      INFLOW >09: (090   )        8.56     3.067     1.042     67.655
03653>      OUTFLOW<10: (POND  )        8.56      .283     1.861     67.653
03654>
03655>                      PEAK   FLOW   REDUCTION [Qout/Qin](%)=    9.214
03656>                      TIME SHIFT OF PEAK FLOW        (min)=     49.17
03657>                      MAXIMUM  STORAGE   USED      (ha.m.)=.4333E+00
03658>
03659> ---------------------------------------------------------------------------
03660> 001:0014-------------------------------------------------------------------
03661> ********************************************
03662> *      Remaining Hawthorne Industrial Park     *
03663> ********************************************
03664> *
03665> * SUB-AREA No.1
03666> ----------------------
03667> | CALIB STANDHYD    |   Area    (ha)=   19.90
03668> | 01:HIP01  DT= 2.50 |   Total Imp(%)=   71.00   Dir. Conn.(%)=   50.00
03669> ----------------------
03670>                                IMPERVIOUS    PERVIOUS (i)
03671>      Surface Area     (ha)=      14.13         5.77
03672>      Dep. Storage     (mm)=       1.57         4.67
03673>      Average Slope     (%)=        .60         1.50
03674>      Length            (m)=     580.00       100.00
03675>      Mannings n          =        .030         .250
03676>
03677>      Max.eff.Inten.(mm/hr)=     153.66       117.89
03678>                 over (min)       12.50        25.00
03679>      Storage Coeff.  (min)=      11.89 (ii)   24.37 (ii)
03680>      Unit Hyd. Tpeak (min)=      12.50        25.00
03681>      Unit Hyd. peak  (cms)=        .09          .05
03682>                                                          *TOTALS*
03683>      PEAK FLOW       (cms)=       2.77         1.13       3.419 (iii)
03684>      TIME TO PEAK    (hrs)=       1.13         1.38       1.167
03685>      RUNOFF VOLUME    (mm)=      70.09        45.94      58.015
03686>      TOTAL RAINFALL   (mm)=      71.66        71.66      71.665
03687>      RUNOFF COEFFICIENT   =        .98          .64        .810
03688>
03689>        (i) CN PROCEDURE SELECTED FOR PERVIOUS LOSSES:
03690>            CN* =  81.0     Ia = Dep. Storage  (Above)
03691>       (ii) TIME STEP (DT) SHOULD BE SMALLER OR EQUAL
03692>            THAN THE STORAGE COEFFICIENT.
03693>      (iii) PEAK FLOW DOES NOT INCLUDE BASEFLOW IF ANY.
03694>
03695> ---------------------------------------------------------------------------
03696> 001:0015-------------------------------------------------------------------
03697> --------------------
03698> | ADD HYD (HIP02 ) | ID: NHYD     AREA     QPEAK   TPEAK   R.V.    DWF
03699> --------------------                (ha)     (cms)   (hrs)   (mm)   (cms)
03700>                    ID1 10:POND      8.56      .283    1.86  67.65    .000
03701>                   +ID2 01:HIP01    19.90     3.419    1.17  58.02    .000
03702>                    ==================================================
03703>                    SUM 02:HIP02    28.46     3.554    1.17  60.91    .000
03704>
03705>    NOTE:  PEAK FLOWS DO NOT INCLUDE BASEFLOWS IF ANY.
03706>
03707> ---------------------------------------------------------------------------
03708> 001:0016-------------------------------------------------------------------
03709> *
03710> * SUB-AREA No.2
03711> ----------------------
03712> | CALIB STANDHYD    |   Area    (ha)=   17.00
03713> | 03:HIP03  DT= 2.50 |   Total Imp(%)=   71.00   Dir. Conn.(%)=   50.00
03714> ----------------------
03715>                                IMPERVIOUS    PERVIOUS (i)
03716>      Surface Area     (ha)=      12.07         4.93
03717>      Dep. Storage     (mm)=       1.57         4.67
03718>      Average Slope     (%)=        .65         1.50
03719>      Length            (m)=     450.00       100.00
03720>      Mannings n          =        .030         .250
03721>
03722>      Max.eff.Inten.(mm/hr)=     178.56       126.60
03723>                 over (min)       10.00        22.50
03724>      Storage Coeff.  (min)=       9.39 (ii)   21.52 (ii)
03725>      Unit Hyd. Tpeak (min)=      10.00        22.50
03726>      Unit Hyd. peak  (cms)=        .12          .05
03727>                                                          *TOTALS*
03728>      PEAK FLOW       (cms)=       2.68         1.05       3.203 (iii)
03729>      TIME TO PEAK    (hrs)=       1.08         1.33       1.125
03730>      RUNOFF VOLUME    (mm)=      70.09        45.94      58.015
03731>      TOTAL RAINFALL   (mm)=      71.66        71.66      71.665
03732>      RUNOFF COEFFICIENT   =        .98          .64        .810
03733>
03734>        (i) CN PROCEDURE SELECTED FOR PERVIOUS LOSSES:
03735>            CN* =  81.0     Ia = Dep. Storage  (Above)
03736>       (ii) TIME STEP (DT) SHOULD BE SMALLER OR EQUAL
03737>            THAN THE STORAGE COEFFICIENT.
03738>      (iii) PEAK FLOW DOES NOT INCLUDE BASEFLOW IF ANY.
03739>
03740> ---------------------------------------------------------------------------
03741> 001:0017-------------------------------------------------------------------
03742> *
03743> * SUB-AREA No.3
03744> ----------------------
03745> | CALIB STANDHYD    |   Area    (ha)=   15.60
03746> | 04:HIP04  DT= 2.50 |   Total Imp(%)=   71.00   Dir. Conn.(%)=   50.00
03747> ----------------------
03748>                                IMPERVIOUS    PERVIOUS (i)
03749>      Surface Area     (ha)=      11.08         4.52
03750>      Dep. Storage     (mm)=       1.57         4.67
03751>      Average Slope     (%)=        .50         1.50
03752>      Length            (m)=     600.00       100.00
03753>      Mannings n          =        .030         .250
03754>
03755>      Max.eff.Inten.(mm/hr)=     153.66       117.89
03756>                 over (min)       12.50        25.00
03757>      Storage Coeff.  (min)=      12.82 (ii)   25.30 (ii)
03758>      Unit Hyd. Tpeak (min)=      12.50        25.00
03759>      Unit Hyd. peak  (cms)=        .09          .04
03760>                                                          *TOTALS*
03761>      PEAK FLOW       (cms)=       2.10          .87       2.612 (iii)
03762>      TIME TO PEAK    (hrs)=       1.13         1.38       1.167
03763>      RUNOFF VOLUME    (mm)=      70.09        45.94      58.015
03764>      TOTAL RAINFALL   (mm)=      71.66        71.66      71.665
03765>      RUNOFF COEFFICIENT   =        .98          .64        .810
03766>
03767>        (i) CN PROCEDURE SELECTED FOR PERVIOUS LOSSES:
03768>            CN* =  81.0     Ia = Dep. Storage  (Above)
03769>       (ii) TIME STEP (DT) SHOULD BE SMALLER OR EQUAL
03770>            THAN THE STORAGE COEFFICIENT.
03771>      (iii) PEAK FLOW DOES NOT INCLUDE BASEFLOW IF ANY.
03772>
03773> ---------------------------------------------------------------------------
03774> 001:0018-------------------------------------------------------------------
03775> --------------------
03776> | ADD HYD (HIP05 ) | ID: NHYD     AREA     QPEAK   TPEAK   R.V.    DWF
03777> --------------------                (ha)     (cms)   (hrs)   (mm)   (cms)
03778>                    ID1 03:HIP03    17.00     3.203    1.13  58.02    .000
03779>                   +ID2 04:HIP04    15.60     2.612    1.17  58.02    .000
03780>                    ==================================================
```

```
03781>                 SUM 05:HIP05     32.60    5.767    1.13  58.02    .000
03782>
03783>    NOTE:  PEAK FLOWS DO NOT INCLUDE BASEFLOWS IF ANY.
03784>
03785> ---------------------------------------------------------------------------
03786> 001:0019-------------------------------------------------------------------
03787> --------------------
03788> | ADD HYD (HIP06 ) | ID: NHYD     AREA     QPEAK   TPEAK   R.V.    DWF
03789> --------------------                (ha)     (cms)   (hrs)   (mm)   (cms)
03790>                    ID1 05:HIP05    32.60    5.767    1.13  58.02    .000
03791>                   +ID2 02:HIP02    28.46    3.554    1.17  60.91    .000
03792>                    ==================================================
03793>                    SUM 06:HIP06    61.06    9.239    1.13  59.36    .000
03794>
03795>    NOTE:  PEAK FLOWS DO NOT INCLUDE BASEFLOWS IF ANY.
03796>
03797> ---------------------------------------------------------------------------
03798> 001:0020-------------------------------------------------------------------
03799> *
03800> * SUB-AREA No.4
03801> ----------------------
03802> | CALIB STANDHYD     |   Area    (ha)=   12.20
03803> | 07:HIP07  DT= 2.50 |   Total Imp(%)=   71.00   Dir. Conn.(%)=   50.00
03804> ----------------------
03805>                                IMPERVIOUS    PERVIOUS (i)
03806>      Surface Area      (ha)=       8.66          3.54
03807>      Dep. Storage      (mm)=       1.57          4.67
03808>      Average Slope      (%)=        .70          1.50
03809>      Length             (m)=     210.00        100.00
03810>      Mannings n          =        .030          .250
03811>
03812>      Max.eff.Inten.(mm/hr)=     178.56        146.17
03813>                 over (min)        5.00         17.50
03814>      Storage Coeff.  (min)=       5.81 (ii)    17.27 (ii)
03815>      Unit Hyd. Tpeak (min)=       5.00         17.50
03816>      Unit Hyd. peak  (cms)=        .20           .07
03817>                                                          *TOTALS*
03818>      PEAK FLOW       (cms)=       2.46           .87       2.793 (iii)
03819>      TIME TO PEAK    (hrs)=       1.00          1.25        1.042
03820>      RUNOFF VOLUME    (mm)=      70.09         45.94       58.015
03821>      TOTAL RAINFALL   (mm)=      71.66         71.66       71.665
03822>      RUNOFF COEFFICIENT   =        .98           .64         .810
03823>
03824>        (i) CN PROCEDURE SELECTED FOR PERVIOUS LOSSES:
03825>            CN* =  81.0    Ia = Dep. Storage  (Above)
03826>       (ii) TIME STEP (DT) SHOULD BE SMALLER OR EQUAL
03827>            THAN THE STORAGE COEFFICIENT.
03828>      (iii) PEAK FLOW DOES NOT INCLUDE BASEFLOW IF ANY.
03829>
03830> ---------------------------------------------------------------------------
03831> 001:0021-------------------------------------------------------------------
03832> *
03833> *SUB-AREA No.5
03834> ----------------------
03835> | DESIGN NASHYD      |   Area    (ha)=    4.00   Curve Number   (CN)=85.00
03836> | 08:Pond-B DT= 2.50 |   Ia      (mm)=   4.670   # of Linear Res.(N)= 3.00
03837> ----------------------   U.H. Tp(hrs)=    .170
03838>
03839>      Unit Hyd Qpeak  (cms)=     .899
03840>
03841>      PEAK FLOW       (cms)=     .649 (i)
03842>      TIME TO PEAK    (hrs)=    1.125
03843>      RUNOFF VOLUME    (mm)=   40.139
03844>      TOTAL RAINFALL   (mm)=   71.665
03845>      RUNOFF COEFFICIENT   =     .560
03846>
03847>      (i) PEAK FLOW DOES NOT INCLUDE BASEFLOW IF ANY.
03848>
03849> ---------------------------------------------------------------------------
03850> 001:0022-------------------------------------------------------------------
03851> --------------------
03852> | ADD HYD (HIP08 ) | ID: NHYD     AREA     QPEAK   TPEAK   R.V.    DWF
03853> --------------------                (ha)     (cms)   (hrs)   (mm)   (cms)
03854>                    ID1 06:HIP06    61.06    9.239    1.13  59.36    .000
03855>                   +ID2 07:HIP07    12.20    2.793    1.04  58.02    .000
03856>                   +ID3 08:Pond-B    4.00     .649    1.13  40.14    .000
03857>                    ==================================================
03858>                    SUM 09:HIP08    77.26   12.109    1.13  58.16    .000
03859>
03860>    NOTE:  PEAK FLOWS DO NOT INCLUDE BASEFLOWS IF ANY.
03861>
03862> ---------------------------------------------------------------------------
03863> 001:0023-------------------------------------------------------------------
03864> ----------------------
03865> | ROUTE RESERVOIR    |    Requested routing time step =  1.0 min.
03866> |  IN>09:(HIP08 )    |
03867> | OUT<10:(HIP-PO)    |    =========  OUTLFOW STORAGE TABLE  =========
03868> ----------------------    OUTFLOW    STORAGE   |  OUTFLOW    STORAGE
03869>                              (cms)    (ha.m.)   |    (cms)    (ha.m.)
03870>                               .000  .0000E+00   |     .724  .2210E+01
03871>                               .048  .5740E-01   |     .937  .2501E+01
03872>                               .054  .2434E+00   |    1.262  .2798E+01
03873>                               .059  .5834E+00   |    1.404  .3101E+01
03874>                               .062  .8400E+00   |    1.532  .3410E+01
03875>                               .064  .1102E+01   |    1.650  .3724E+01
03876>                               .147  .1370E+01   |    2.409  .4044E+01
03877>                               .280  .1644E+01   |    3.689  .4370E+01
03878>                               .472  .1924E+01   |     .000  .0000E+00
03879>
03880>      ROUTING RESULTS            AREA     QPEAK     TPEAK       R.V.
03881>      --------------------       (ha)     (cms)     (hrs)       (mm)
03882>      INFLOW >09: (HIP08 )      77.26    12.109     1.125     58.156
03883>      OUTFLOW<10: (HIP-PO)      77.26     1.432     2.889     58.156
03884>
03885>                     PEAK   FLOW   REDUCTION [Qout/Qin](%)=   11.826
03886>                     TIME SHIFT OF PEAK FLOW         (min)=   105.83
03887>                     MAXIMUM  STORAGE   USED       (ha.m.)=.3168E+01
03888>
03889> ---------------------------------------------------------------------------
03890> 001:0024-------------------------------------------------------------------
03891> *
03892> *SUB-AREA No. 6
03893> ----------------------
03894> | DESIGN NASHYD      |   Area    (ha)=    2.70   Curve Number   (CN)=76.00
03895> | 01:A3     DT= 2.50 |   Ia      (mm)=   4.670   # of Linear Res.(N)= 3.00
03896> ----------------------   U.H. Tp(hrs)=    .800
03897>
03898>      Unit Hyd Qpeak  (cms)=     .129
03899>
03900>      PEAK FLOW       (cms)=     .114 (i)
03901>      TIME TO PEAK    (hrs)=    1.958
03902>      RUNOFF VOLUME    (mm)=   30.490
03903>      TOTAL RAINFALL   (mm)=   71.665
03904>      RUNOFF COEFFICIENT   =     .425
03905>
03906>      (i) PEAK FLOW DOES NOT INCLUDE BASEFLOW IF ANY.
03907>
03908> ---------------------------------------------------------------------------
03909> 001:0025-------------------------------------------------------------------
03910> --------------------
03911> | ADD HYD (Ultima) | ID: NHYD     AREA     QPEAK   TPEAK   R.V.    DWF
03912> --------------------                (ha)     (cms)   (hrs)   (mm)   (cms)
03913>                    ID1 10:HIP-PO    77.26    1.432    2.89  58.16    .000
03914>                   +ID2 01:A3         2.70     .114    1.96  30.49    .000
03915>                    ==================================================
03916>                    SUM 02:Ultima    79.96    1.515    2.57  57.22    .000
03917>
03918>    NOTE:  PEAK FLOWS DO NOT INCLUDE BASEFLOWS IF ANY.
03919>
03920> ---------------------------------------------------------------------------
03921> 001:0026-------------------------------------------------------------------
03922>       FINISH
03923> ---------------------------------------------------------------------------
03924> ***************************************************************************
03925>      WARNINGS / ERRORS / NOTES
03926>      -------------------------
03927>    Simulation ended on 2009-05-15     at 08:45:24
03928> ===========================================================================
03929>
03930>
```

DATE : 5/27/2009

Hawthorne Industrial Park

City of Ottawa

OPEN DITCH/CULVERT DESIGN SHEET

Prepared by: M. Buchanan, E.I.T.

JLR 20983

February 2009 (Revised April 2009)

Checked by: G. Forget, P.Eng.

1:10 year Ottawa International Airport IDF Curve

Increase Runoff Coefficient by 0.0%

DETAILS	NODES		DRAINAGE AREA					PEAK FLOW GENERATION					OPEN DITCH/SWALE DATA									CULVERTS SIZED UNDER 1:10 YEAR STORM EVENT						FLOW	U/S	D/S
	FROM	TO	Area at C of 0.70 (ha)	0.90 (ha)	SUM(A)	SUM(A*C)	TOTAL A*C	2.78AR	2.78AR CUM	TIME min.	INTENS. mm/hr	PEAK FL. l/s	BW m	D_{10yr} m	D_{max} m	SS X:1	SLOPE %	Q_{10yr} l/s	Q_{100yr} l/s	VEL. m/s	LENGTH m	No. of Barrels	DIA (mm)	B x D (m)	INLET CONTROL	OUTLET CONTROL	HW 1:10 (m)	TIME (min)	Inv (m)	Inv (m)
NORTHERN CATCHMENT AREA																														
WEST SIDE SAPPERS RIDGE	2	3	1.86	0.18	2.04	1.46	1.46	4.07	4.07	15.00	97.85	398.2	0.00	0.42	1.20	3.00	0.50	424.2	6973.0	0.80	136.80							2.84	92.50	91.82
WEST SIDE SAPPERS RIDGE	3	4	1.89	0.14	2.03	1.45	2.92	4.04	8.11	17.84	88.22	715.4	0.00	0.51	1.20	3.00	0.80	904.2	8856.1	1.16	111.00							1.60	91.82	90.93
WEST SIDE SAPPERS RIDGE	4	5	1.76	0.15	1.91	1.36	4.28	3.79	11.90	19.44	83.68	995.9	0.00	0.58	1.20	3.00	0.51	1011.3	7029.1	1.00	112.85							1.88	90.93	90.36
WEST SIDE SAPPERS RIDGE	5	6	2.43	0.11	2.54	1.80	6.08	5.00	16.90	21.32	78.96	1334.4	0.00	0.65	1.20	3.00	0.62	1513.4	7762.6	1.19	82.79							1.16	90.36	89.85
										22.47																				
NORTH ENTRANCE TO SOMME STREET	8	6		0.03	0.03	0.03	0.03	0.08	0.08	15.00	97.85	7.3	0.00	0.20	1.20	3.00	1.30	94.9	11276.7	0.79	10.00							0.21	89.98	89.85
										15.21																				
CULVERT CROSSING	6	14		0.00	0.00	0.00	6.11	0.00	16.97	22.47	76.34	1295.8					0.50				20.00	2	-----	1.15 x 0.82	NO	YES	**0.75**	0.38	89.85	89.75
										22.85																				
NORTH PORTION SOMME STREET	13	14	0.85	0.03	0.88	0.62	0.62	1.73	1.73	15.00	97.85	169.2	0.00	0.30	1.20	3.00	2.30	372.0	14999.4	1.38	10.00							0.12	89.98	89.75
										15.12																				
NORTH PORTION SOMME STREET	14	15	2.93	0.24	3.17	2.27	8.99	6.30	25.00	22.85	75.52	1888.2	0.00	0.74	1.20	3.00	0.50	1926.6	6992.8	1.17	184.04							2.62	89.75	88.83
NORTH PORTION SOMME STREET	15	16	2.08	0.18	2.26	1.62	10.61	4.50	29.50	25.47	70.36	2075.4	0.00	0.77	1.20	3.00	0.57	2291.4	7480.8	1.29	145.08							1.88	88.83	88.00
NORTH PORTION SOMME STREET	16	18	2.34	0.23	2.57	1.85	12.46	5.13	34.63	27.35	67.11	2323.9	0.00	0.80	1.20	3.00	0.51	2399.6	7074.8	1.25	185.66							2.48	88.00	87.05
NORTH PORTION SOMME STREET	18	19	0.00	0.05	0.05	0.05	12.50	0.13	34.75	29.82	63.30	2199.9	0.00	0.76	1.20	3.00	0.72	2476.8	8372.8	1.43	41.86							0.49	87.05	86.75
										30.31																				
EAST SIDE SAPPERS RIDGE	9	10	1.74	0.19	1.93	1.39	1.39	3.86	3.86	15.00	97.85	378.0	0.00	0.41	1.20	3.00	0.50	399.2	6996.6	0.79	147.87							3.11	92.40	91.66
EAST SIDE SAPPERS RIDGE	10	11	1.49	0.14	1.63	1.17	2.56	3.25	7.11	18.11	87.42	622.0	0.00	0.49	1.20	3.00	0.66	735.9	8019.2	1.02	111.04							1.81	91.66	90.93
EAST SIDE SAPPERS RIDGE	11	12	0.73	0.14	0.87	0.64	3.20	1.77	8.88	19.92	82.40	732.0	0.00	0.52	1.20	3.00	0.55	785.5	7304.8	0.97	104.49							1.80	90.93	90.36
EAST SIDE SAPPERS RIDGE	12	7	0.18	0.09	0.27	0.21	3.40	0.58	9.46	21.72	78.02	738.2	0.00	0.49	1.20	3.00	0.81	818.5	8919.0	1.14	72.55							1.06	90.36	89.77
NORTH PORTION SOMME STREET	7	20	1.07	0.23	1.30	0.96	4.36	2.66	12.12	22.79	75.66	916.9	0.00	0.57	1.20	3.00	0.50	956.8	6966.1	0.98	177.39							3.01	89.77	88.89
NORTH PORTION SOMME STREET	20	21	2.27	0.19	2.46	1.76	6.12	4.89	17.01	25.80	69.76	1186.8	0.00	0.62	1.20	3.00	0.50	1200.1	6981.9	1.04	147.49							2.36	88.89	88.16
NORTH PORTION SOMME STREET	21	22	3.43	0.30	3.73	2.67	8.79	7.43	24.44	28.16	65.80	1608.1	0.00	0.70	1.20	3.00	0.56	1759.0	7404.4	1.20	232.84							3.24	88.16	86.85
										31.40																				.
SOUTHERN CATCHMENT AREA																														
SOUTH PORTION SOMME STREET	23A	23B	0.00	0.25	0.25	0.23	0.23	0.63	0.63	15.00	97.85	61.2	0.00	0.20	1.20	3.00	0.64	66.3	7883.5	0.55	181.00							5.46	93.65	92.50
CULVERT CROSSING	23B	23C		0.00	0.00	0.00	0.23	0.00	0.63	20.46	81.05	50.7					0.42				24.00	1	500	-----	NO	YES	**0.33**	1.55	92.50	92.40
SOUTH PORTION SOMME STREET	23C	24A	0.00	0.17	0.17	0.15	0.38	0.43	1.05	22.00	77.38	81.3	0.00	0.22	1.20	3.00	0.82	97.0	8946.1	0.67	110.00							2.74	92.40	91.50
CULVERT CROSSING	24A	24B		0.00	0.00	0.00	0.38	0.00	1.05	24.75	71.70	75.3					0.42				24.00	1	500	-----	NO	YES	**0.34**	1.04	91.50	91.40
SOUTH PORTION SOMME STREET	24B	24C	0.00	0.21	0.21	0.19	0.57	0.53	1.58	25.79	69.78	110.0	0.00	0.25	1.20	3.00	0.70	126.0	8258.2	0.67	142.00							3.52	91.40	90.41
ORGAWORLD - SITE	U/S	24C	1:10 year peak flow = 132 L/s, see Table 4 of Orgaworld Stormwater Site Management Plan, Sept. 2008									132.0																		
SOUTH PORTION SOMME STREET	24C	25	3.70	0.32	4.02	2.88	3.44	8.00	9.58	29.31	64.05	745.3	0.00	0.52	1.20	3.00	0.54	783.8	7289.5	0.97	244.84							4.22	90.41	89.08
SOUTH PORTION SOMME STREET	25	26	2.63	0.12	2.75	1.95	5.39	5.42	14.99	33.53	58.41	1007.7	0.00	0.58	1.20	3.00	0.51	1013.1	7041.5	1.00	90.75							1.51	89.08	88.62
SOUTH PORTION SOMME STREET	26	27A	3.15	0.20	3.35	2.39	7.78	6.63	21.63	35.04	56.65	1357.2	0.00	0.62	1.20	3.00	0.65	1370.0	7970.4	1.19	157.06							2.20	88.62	87.60
SOUTH PORTION SOMME STREET	27A	27B	0.00	0.03	0.03	0.03	7.81	0.08	21.70	37.24	54.29	1310.1	0.00	0.61	1.20	3.00	0.65	1312.4	7973.8	1.18	20.00							0.28	87.60	87.47
CULVERT CROSSING	27B	27C		0.00	0.00	0.00	7.81	0.00	21.70	37.53	54.00	1303.8					0.73				15.00	1	----	1.39 X 0.97	YES	NO	**0.87**	0.20	87.47	87.36
CORNER OF POND	27C	19	0.00	0.11	0.11	0.10	7.88	0.28	21.98	37.73	53.79	1314.2	0.00	0.65	1.20	3.00	0.71	1622.9	8324.0	1.28	72.00							0.94	87.36	86.85
										38.67																				

DATE : 5/27/2009

Hawthorne Industrial Park

OPEN DITCH/CULVERT DESIGN SHEET

City of Ottawa

Prepared by: M. Buchanan, E.I.T.

JLR 20983

1:100 year Ottawa International Airport IDF Curve

February 2009 (Revised April 2009)

Checked by: G. Forget, P.Eng.

Increase Runoff Coefficient by 25.0%

DETAILS	NODES		DRAINAGE AREA					PEAK FLOW GENERATION					OPEN DITCH/SWALE DATA							CULVERTS SIZED UNDER 1:10 YEAR STORM EVENT					FLOW	U/S	D/S
	FROM	TO	Area at C of 0.70 (ha)	Area at C of 0.90 (ha)	SUM(A)	SUM(A*1.25*C) 25% increase in C factor	TOTAL A*C	2.78AR	2.78AR CUM	TIME min.	INTENS. mm/hr	PEAK FL. l/s	BW m	D m	SS X:1	SLOPE %	CAPAC. l/s	VEL. m/s	LENGTH m	No. of Barrels	DIA (mm)	B x D (m)	INLET CONTROL	OUTLET CONTROL	TIME (min)	Inv (m)	Inv (m)
NORTHERN CATCHMENT AREA																											
WEST SIDE SAPPERS RIDGE	2	3	1.86	0.18	2.04	1.81	1.81	5.02	5.02	15.00	142.89	718.0	0.00	1.20	3.00	0.50	6973.0	1.61	136.80						1.41	92.50	91.82
WEST SIDE SAPPERS RIDGE	3	4	1.89	0.14	2.03	1.80	3.61	5.00	10.02	16.41	135.47	1357.9	0.00	1.20	3.00	0.80	8856.1	2.05	111.00						0.90	91.82	90.93
WEST SIDE SAPPERS RIDGE	4	5	1.76	0.15	1.91	1.69	5.29	4.69	14.71	17.31	131.16	1929.7	0.00	1.20	3.00	0.51	7029.1	1.63	112.85						1.16	90.93	90.36
WEST SIDE SAPPERS RIDGE	5	6	2.43	0.11	2.54	2.23	7.53	6.21	20.92	18.47	126.06	2637.5	0.00	1.20	3.00	0.62	7762.6	1.80	82.79						0.77	90.36	89.85
										19.24																	
NORTH ENTRANCE TO SOMME STREET	8	6		0.03	0.03	0.03	0.03	0.08	0.08	15.00	142.89	11.9	0.00	1.20	3.00	1.30	11276.7	2.61	10.00						0.06	89.98	89.85
										15.06																	
CULVERT CROSSING	6	14		0.00	0.00	0.00	7.56	0.00	21.01	19.24	122.91	2581.8				0.50			20.00	2	-----	1.15 x 0.82	NO	YES	0.19	89.85	89.75
										19.43																	
NORTH PORTION SOMME STREET	13	14	0.85	0.03	0.88	0.77	0.77	2.15	2.15	15.00	142.89	307.4	0.00	1.20	3.00	2.30	14999.4	3.47	10.00						0.05	89.98	89.75
										15.05																	
NORTH PORTION SOMME STREET	14	15	2.93	0.24	3.17	2.80	11.13	7.79	30.95	19.43	122.15	3780.5	0.00	1.20	3.00	0.50	6992.8	1.62	184.04						1.89	89.75	88.83
NORTH PORTION SOMME STREET	15	16	2.08	0.18	2.26	2.00	13.13	5.56	36.51	21.32	115.16	4204.4	0.00	1.20	3.00	0.57	7480.8	1.73	145.08						1.40	88.83	88.00
NORTH PORTION SOMME STREET	16	18	2.34	0.23	2.57	2.28	15.41	6.33	42.84	22.72	110.55	4736.0	0.00	1.20	3.00	0.51	7074.8	1.64	185.66						1.89	88.00	87.05
NORTH PORTION SOMME STREET	18	19	0.00	0.05	0.05	0.05	15.46	0.14	42.98	24.61	104.93	4509.7	0.00	1.20	3.00	0.72	8372.8	1.94	41.86						0.36	87.05	86.75
										24.97																	
EAST SIDE SAPPERS RIDGE	9	10	1.74	0.19	1.93	1.71	1.71	4.76	4.76	15.00	142.89	680.4	0.00	1.20	3.00	0.50	6996.6	1.62	147.87						1.52	92.40	91.66
EAST SIDE SAPPERS RIDGE	10	11	1.49	0.14	1.63	1.44	3.16	4.02	8.78	16.52	134.93	1184.3	0.00	1.20	3.00	0.66	8019.2	1.86	111.04						1.00	91.66	90.93
EAST SIDE SAPPERS RIDGE	11	12	0.73	0.14	0.87	0.78	3.94	2.16	10.94	17.52	130.23	1424.7	0.00	1.20	3.00	0.55	7304.8	1.69	104.49						1.03	90.93	90.36
EAST SIDE SAPPERS RIDGE	12	7	0.18	0.09	0.27	0.25	4.18	0.69	11.63	18.55	125.73	1462.2	0.00	1.20	3.00	0.81	8919.0	2.06	72.55						0.59	90.36	89.77
NORTH PORTION SOMME STREET	7	20	1.07	0.23	1.30	1.17	5.35	3.24	14.87	19.13	123.33	1834.1	0.00	1.20	3.00	0.50	6966.1	1.61	177.39						1.83	89.77	88.89
NORTH PORTION SOMME STREET	20	21	2.27	0.19	2.46	2.18	7.53	6.05	20.92	20.97	116.41	2435.6	0.00	1.20	3.00	0.50	6981.9	1.62	147.49						1.52	88.89	88.16
NORTH PORTION SOMME STREET	21	22	3.43	0.30	3.73	3.30	10.83	9.18	30.10	22.49	111.29	3350.0	0.00	1.20	3.00	0.56	7404.4	1.71	232.84						2.26	88.16	86.85
										24.75																	
SOUTHERN CATCHMENT AREA																											
SOUTH PORTION SOMME STREET	23A	23B	0.00	0.25	0.25	0.25	0.25	0.70	0.70	15.00	142.89	99.3	0.00	1.20	3.00	0.64	7883.5	1.82	181.00						1.65	93.65	92.50
CULVERT CROSSING	23B	23C		0.00	0.00	0.00	0.25	0.00	0.70	16.65	134.29	93.3				0.42			24.00	1	500	-----	NO	YES	0.84	92.50	92.40
SOUTH PORTION SOMME STREET	23C	24A	0.00	0.17	0.17	0.17	0.42	0.47	1.17	17.49	130.34	152.2	0.00	1.20	3.00	0.82	8946.1	2.07	110.00						0.89	92.40	91.50
CULVERT CROSSING	24A	24B		0.00	0.00	0.00	0.42	0.00	1.17	18.38	126.45	147.6				0.42			24.00	1	500	-----	NO	YES	0.53	91.50	91.40
SOUTH PORTION SOMME STREET	24B	24C	0.00	0.21	0.21	0.21	0.63	0.58	1.75	18.91	124.24	217.6	0.00	1.20	3.00	0.70	8258.2	1.91	142.00						1.24	91.40	90.41
ORGAWORLD - SITE	U/S	24C	1:100 year peak flow = 283 l/s, see Table 4 of Orgaworld Stormwater Site Management Plan, Sept. 2008									283.0															
SOUTH PORTION SOMME STREET	24C	25	3.70	0.32	4.02	3.56	4.19	9.89	11.64	20.15	119.40	1672.8	0.00	1.20	3.00	0.54	7289.5	1.69	244.84						2.42	90.41	89.08
SOUTH PORTION SOMME STREET	25	26	2.63	0.12	2.75	2.42	6.61	6.73	18.37	22.57	111.05	2323.0	0.00	1.20	3.00	0.51	7041.5	1.63	90.75						0.93	89.08	88.62
SOUTH PORTION SOMME STREET	26	27A	3.15	0.20	3.35	2.96	9.57	8.22	26.59	23.49	108.17	3159.5	0.00	1.20	3.00	0.65	7970.4	1.84	157.06						1.42	88.62	87.60
SOUTH PORTION SOMME STREET	27A	27B	0.00	0.03	0.03	0.03	9.60	0.08	26.67	24.91	104.09	3059.5	0.00	1.20	3.00	0.65	7973.8	1.85	20.00						0.18	87.60	87.47
CULVERT CROSSING	27B	27C		0.00	0.00	0.00	9.60	0.00	26.67	25.09	103.59	3046.2				0.73			15.00	1	-----	1.39 X 0.97	YES	NO	0.09	87.47	87.36
CORNER OF POND	27C	19	0.00	0.11	0.11	0.11	9.71	0.31	26.98	25.18	103.36	3071.7	0.00	1.20	3.00	0.71	8324.0	1.93	72.00						0.62	87.36	86.85
										25.80																	

4.0 Observations

4.1 Surface Conditions

The central portion of the subject site consists of an engineered fill pad which has undergone a successful deep dynamic compaction program by others in June 2022. The remainder of the subject site is generally undeveloped and grass covered, with a slope and watercourse near the northern boundary of the site. Fill piles were also noted within the northern limits of the site, and a gravel surfaced access road bisects the southeast corner of the property.

Based on available aerial photographs, the subject site was densely forested as recently as 1991. By 1999, tree clearing and earthwork operations were ongoing within the subject site and overall business park. Aerial photographs taken between 1999 and 2017 indicate that the subject site was used for stockpiling fill and that numerous temporary access roads had bisected various areas throughout the site. By 2022, it was observed that the central portion of the subject site had been prepared for a ground improvement program. Reference should be made to Figure 1A – Aerial Photograph – 1991, Figure 1B – Aerial Photograph – 1999 and Figure 1C – Aerial Photograph – 2022.

The site is bordered to the north by Rideau Road, to the east by vacant properties located within the overall business park, and to the south and west by Somme Street. The ground surface across the subject site is generally level at an approximate geodetic elevation of 90 to 91 m, but slopes downward near the northern property boundary to an approximate geodetic elevation of 85 m.

4.2 Subsurface Profile

Generally, the subsurface profile encountered at the test hole locations consists of topsoil underlain by an approximate 2.3 to 10 m thickness of fill material, which is further underlain by a layer of clayey silt to silty clay and/or silty sand. Generally, the fill material was observed to consist of a silty sand and/or silty clay with varying amounts of organics, gravel, asphalt, concrete and bedrock fragments.

A deposit of glacial till consisting of a compact to dense, brown silty sand to sandy silt with gravel, cobbles and boulders was noted underlying the fill material. The silty sand to sandy silt was noted to be grey in colour by approximate depths ranging from 5.8 to 7.6 m below ground surface, and extended to maximum depths ranging from 6.9 to 11.9 m.

Coring through boulders within the glacial till deposit was completed by others at boreholes BH 1 and BH 3 at approximate depths of 7.3 and 10.0 m, respectively, below the ground surface.

A deposit of brown silty sand with gravel was noted underlying the fill material borehole BH 1 and BH 3 and extended to an approximate depth of 8.4 m below the existing ground surface.

Bedrock

Practical refusal to augering was encountered at approximate depths ranging from 5.3 to 12.0 m below ground surface. Practical refusal to the DCPT was noted at a depth of about 5.9 m at DCPT 5 by others. The bedrock was cored by others at boreholes BH 1-21, BH 2-21 and BH 1 through BH3, and was noted to consist of poor to excellent quality, grey limestone with interbedded sandstone. The bedrock was cored to a maximum depth of 18.9 m below the existing ground surface.

Uniaxial compressive strength (UCS) testing was carried out on a total of 2 bedrock samples by others. The test results indicate that the UCS of the bedrock samples were 139 and 125 MPa for the samples tested at borehole BH 2-21.

Reference should be made to the Soil Profile and Test Data Sheets in Appendix 1 for details of the soil and bedrock profile encountered at each borehole location.

Grain Size Distribution and Hydrometer Testing

A total of 11 grain size analyses and hydrometer tests were completed by others. The results are summarized in Table 1 on the following page and are presented in Appendix 1.

Table 1 – Summary of Grain Size Distribution Analysis					
Test Hole	**Sample**	**Gravel (%)**	**Sand (%)**	**Silt (%)**	**Clay (%)**
BH1-21	SS2B*	17	60	19	4
BH1-21	SS13	16	32	36	16
BH2-21	SS12	20	38	33	9
BH2-21	SS18	6	29	42	23
BH3-21	SS8	19	49	26	6
BH5-21	SS3*	25	38	29	8
BH5-21	SS7	10	38	41	11
BH1	SS3*	51	43	6	1
BH2	SS4*	1	2	36	61
BH2	SS7*	25	38	29	8
BH3	SS10	8	47	37	8
Note: * – Soil sample taken within the fill material.					

Atterberg Limit Tests

A total of 6 soil samples were submitted for Atterberg Limits testing by others. The test results indicate that the selected soil samples were generally classified as an Inorganic Clay of Low Plasticity (CL) to an Inorganic Silt of Low Plasticity (ML). These classifications are in accordance with the Unified Soil Classification System. The results are summarized in Table 2 below.

Table 2 – Summary of Atterberg Limits Results							
Borehole	**Sample**	**Depth (m)**	**LL (%)**	**PL (%)**	**PI (%)**	**MC (%)**	**Classification**
BH 1-21	SS13	9.1 – 9.8	26	18	8.0	8.0	CL-ML
BH 2-21	SS12	8.4 – 9.0	25	17	8.0	8.9	CL-ML
BH 2-21	SS18	13.0 – 13.6	28	14	14	11.9	CL
BH 3-21	SS8	5.3 – 5.9	17	13	4.0	9.7	CL-ML
BH 5-21	SS7	4.6 – 5.2	20	13	7.0	15.0	CL-ML
BH 2	SS4*	2.3 – 3.0	69	21	48	56.0	CH
Notes: * – Soil sample taken within the fill material; LL: Liquid Limit; PL: Plastic Limit; PI: Plasticity Index; MC: Natural Moisture Content, CH: Inorganic Clay of High Plasticity; CL: Inorganic Clay of Low Plasticity; ML: Inorganic Silt of Low Plasticity							

The results of the Atteberg Limits testing at this site generally indicate that the cohesive soils vary from a high plasticity clay (CH) to a low plasticity silt (ML). Further, the natural moisture contents indicate that the cohesive soils are below the plastic limit, or between the plastic limit and liquid limit.

4.3 Groundwater

Groundwater levels were measured in the monitoring wells and standpipe piezometers following completion of the respective drilling programs. The measured groundwater levels are presented on the Soil Profile and Test Data sheets in Appendix 1, and in Table 1 below:

Table 3 – Summary of Groundwater Levels

Borehole Number	Ground Surface Elevation (m)	Measured Groundwater Level		Dated Recorded
		Depth (m)	Elevation (m)	
BH 1-25	91.31	3.44	87.87	June 5, 2025
BH 2-25	91.06	3.01	88.05	June 5, 2025
BH 3B-25	90.80	3.31	87.49	June 5, 2025
BH 4-25	92.18	7.54	84.64	June 5, 2025
BH 1	91.80	2.92	88.88	May 28, 2019
		3.09	88.71	November 10, 2020
BH 2	92.38	3.82	88.56	May 28, 2019
		3.17	89.21	November 10, 2020
BH1 (GHD)	90.21*	3.99	86.22	August 18, 2020
		2.95	87.26	June 3, 2022
MW7-08	93.81*	3.68	90.13	July 17, 2008
	92.85	2.95	89.90	November 10, 2020
B5-1	90.48*	7.63	82.85	-

Note: Ground surface elevations at borehole location are referenced to a geodetic datum.
* – Ground Surface elevations surveyed by others

However, it should be noted that groundwater levels are subject to seasonal fluctuations. Therefore, the groundwater levels could vary at the time of construction.

5.0 Discussion

5.1 Geotechnical Assessment

From a geotechnical perspective, the subject site is suitable for the proposed development. Foundation support for the proposed buildings is recommended to consist of conventional spread footings bearing on the existing fill material which has undergone a successful ground improvement program, as approved by others. Documentation of the ground improvement program completed to date is provided in Appendix 3.

However, the ground improvement program was completed a few years ago for a different building configuration, and does not encompass the entirety of the currently proposed buildings, therefore additional ground improvement will be required. A letter discussing the additional ground improvement, prepared by the ground improvement contractor, is provided in Appendix 4.

Due to the presence of silty clay at this site, the proposed development will be subjected to grade raise restrictions. Our permissible grade raise recommendations are discussed in Section 5.3.

The current site plan shows the proposed development extending near the northern property boundary. This will require the construction of a retaining wall or mechanically stabilized earth (MSE) wall to stabilize and shift the existing slope. This is discussed further in Section 6.8.

The above and other considerations are discussed in the following paragraphs.

5.2 Site Grading and Preparation

Stripping Depth

Surficial topsoil and any fill containing significant amounts of deleterious or organic materials should be stripped from under the proposed buildings and other settlement sensitive structures.

However, it is anticipated that the existing fill underlying the proposed asphalt paved areas, free of deleterious material and significant amounts of organics, can be left in place. In this case, it is recommended that the existing fill layer be proof-rolled with several passes of a vibratory drum roller, under dry conditions and above freezing temperatures, and which is approved by Paterson personnel at the time of construction. Any poor performing areas noted during the proof-rolling operation should be removed and replaced with an approved fill.

Engineered Fill Placement

Engineered fill used for grading beneath the proposed buildings, where required, should consist of clean imported granular fill, such as Ontario Provincial Standard Specifications (OPSS) Granular A or Granular B Type II. This material should be tested and approved prior to delivery to the site. The fill should be placed in lifts no greater than 300 mm thick and compacted using suitable compaction equipment for the lift thickness. Fill placed beneath the building and paved areas should be compacted to at least 98% of the material's standard Proctor maximum dry density (SPMDD).

Non-specified existing fill, along with site-excavated soil, can be used as general landscaping fill where settlement of the ground surface is of minor concern. This material should be spread in thin lifts and at least compacted by the tracks of the spreading equipment to minimize voids. If this material is to be used to build up the subgrade level for areas to be paved, it should be compacted in thin lifts to at least 95% of the material's SPMDD.

Ground Improvement

As noted above in Section 5.1, additional ground improvement will be required at the subject site in order to encompass the entirety of the currently proposed buildings. This is discussed in the letter in Appendix 4, which has been prepared by the ground improvement contractor.

Ground improvement programs are based on the level of density and the depth of improved soil required.

The existing ground improvement at the site was completed by deep dynamic compaction, which uses a heavy weight dropped from a crane, and which is effective for compacting loose soils to significant depths. Currently, this same method of ground improvement is proposed for the remaining areas to be improved for the currently proposed development.

Ground improvement programs are completed by design-build contractors, many of which have proprietary systems. The ground improvement program should also account for loose fill soils below the groundwater table, and should sufficiently densify them such that they are not susceptible to the effects of liquefaction.

A detailed design submittal should then be provided for Paterson's review and comment prior to the commencement of additional ground improvement operations.

Vibration Considerations

Construction operations could be the cause of vibrations, and possibly, sources of nuisance to the community. Therefore, means to reduce the vibration levels as much as possible should be incorporated in the construction operations to maintain a cooperative environment with the residents.

The following construction equipment could be the source of vibrations: ground improvement, hoe ram, compactor, dozer, crane, truck traffic, etc. Vibrations, whether caused by the ground improvement or by other construction operations, could be the cause or the source of detrimental vibrations at the nearby buildings and structures. Therefore, it is recommended that all vibrations be limited.

Two parameters determine the permissible vibrations, the maximum peak particle velocity and the frequency. For low frequency vibrations, the maximum allowable peak particle velocity is less than that for high frequency vibrations. As a guideline, the peak particle velocity should be less than 15 mm/s between frequencies of 4 to 12 Hz, and 50 mm/s above a frequency of 40 Hz (interpolate between 12 and 40 Hz).

It should be noted that these guidelines are for current construction standards. These guidelines are above perceptible human level and, in some cases, could be very disturbing to some people. It is recommended that a pre-construction survey be completed to minimize the risks of claims during or following the construction of the proposed buildings.

5.3 Foundation Design

Bearing Resistance Values

Footings placed on an existing fill subgrade, which has undergone a ground improvement program, approved by others, can be designed using a bearing resistance value at serviceability limit states (SLS) of **200 kPa** and a factored bearing resistance value at ultimate limit states (ULS) of **275 kPa**, in accordance with the recommendations provided by the ground improvement specialists.

Footings bearing on an approved fill subgrade and designed using the bearing resistance values provided herein will be subjected to potential post-construction total and differential settlements of 25 and 19 mm, respectively, in accordance with the recommendations provided by the ground improvement specialists.

Lateral Support

The bearing medium under footing-supported structures is required to be provided with adequate lateral support with respect to excavations and different foundation levels. Above the groundwater level, adequate lateral support is provided to the in-situ bearing medium soils when a plane extending down and out from the bottom edge of the footing at a minimum of 1.5H:1V passes only through in situ soil.

Permissible Grade Raise Restrictions

Due to the presence of the silty clay soils observed within portions of this site, a permissible grade raise restriction is recommended for the proposed development at the subject site. Based on the testing results, a permissible grade raise restriction of **2.0 m** above the existing ground surface is recommended.

If higher than permissible grade raises are required, preloading with or without a surcharge, lightweight fill, and/or other measures should be investigated to reduce the risks of unacceptable long-term post construction total and differential settlements.

5.4 Design for Earthquakes

The site class for seismic site response can be taken as **Class X_D**. A higher seismic site class (such as Class X_C) may be achievable following completion of the ground improvement program, however, a site-specific shear wave velocity test would be required to accurately determine the higher seismic site classification for foundation design of the proposed buildings, as defined in Table 4.1.8.4.A of the Ontario Building Code (OBC) 2024.

If required, Paterson can conduct the site-specific shear wave velocity test. Following completion of the ground improvement program, the soils underlying the subject site will not be susceptible to liquefaction.

5.5 Slab on Grade Construction

With the removal of all topsoil and fill, containing significant amounts of deleterious or organic materials, the existing fill material, which has undergone a successful ground improvement program, approved by others, is considered to be an acceptable subgrade surface on which to commence backfilling for slab on grade construction.

It is recommended that the upper 200 mm sub-floor fill consists of OPSS Granular A crushed stone. All backfill materials within the footprint of the proposed buildings should be placed in a maximum of 300 mm thick loose layers and compacted to at least 98% of the material's SPMDD.

5.6 Pavement Design

For design purposes, the pavement structures presented in the following tables are recommended for the design of car only parking areas, access lanes, heavy truck parking and loading areas.

Table 4 – Recommended Pavement Structure – Car Only Parking Areas

Thickness (mm)	Material Description
50	**Wear Course** – HL-3 or Superpave 12.5 Asphaltic Concrete
150	**BASE** – OPSS Granular A Crushed Stone
300	**SUBBASE** – OPSS Granular B Type II
SUBGRADE – Either fill, in situ soil or OPSS Granular B Type I or II material placed over in situ soil or fill.	

Table 5 – Recommended Pavement Structure – Access Lanes and Heavy Truck Parking/Loading Areas	
Thickness (mm)	**Material Description**
40	**Wear Course** – HL-3 or Superpave 12.5 Asphaltic Concrete
50	**Binder Course** – HL-8 or Superpave 19.0 Asphaltic Concrete
150	**BASE** – OPSS Granular A Crushed Stone
450	**SUBBASE** – OPSS Granular B Type II
SUBGRADE – Either fill, in situ soil or OPSS Granular B Type I or II material placed over in situ soil or fill.	

Minimum Performance Graded (PG) 58-34 asphalt cement should be used for this project.

If soft spots develop in the subgrade during compaction or due to construction traffic, the affected areas should be excavated and replaced with OPSS Granular B Type II material.

The pavement granular base and subbase should be placed in maximum 300 mm thick lifts and compacted to a minimum of 99% of the material's SPMDD using suitable vibratory equipment.

5.7 SWMP Design

As noted above, it is understood that a SWMP will be constructed at the subject site. From a geotechnical perspective, the construction of the proposed SWM Pond is considered suitable for this site. However, it is recommended that Paterson complete a review of the detailed design, once available, as details such as pond bottom elevation, proposed side slopes, permanent pond elevation, 5-year and 100-year water elevations, were not known at the time of preparation of this report.

Generally, the subsoil conditions at the borehole locations throughout the proposed SWMP generally consist of a silty sand to silty clay fill underlain by glacial till and bedrock. Accordingly, a pond liner is recommended which may consist of one of the following:

- A 500 mm thick layer of workable, brown silty clay which is compacted with several passes of a sheepsfoot roller, and placed directly over the existing fill, or a

- 150 mm thick layer of 19 mm clear crushed stone placed over the fill subgrade, followed by a scrim-reinforced geosynthetic clay liner (such as the Bentofix Thermal Lock SRNWL Series Geosynthetic Clay Liner, or approved equivalent) which is capped with a 300 mm thick layer of OPSS Granular A material.

The long-term performance of the proposed SWMP will depend on the stability of its excavation side slopes. From a geotechnical perspective, the sidewall slopes should be constructed at 3H:1V or shallower.

6.0 Design and Construction Precautions

6.1 Foundation Drainage and Backfill

Backfill against the exterior sides of the foundation walls should consist of free draining, non-frost susceptible granular materials. Imported granular materials, such as clean sand or OPSS Granular B Type I granular material, can be used for this purpose.

6.2 Protection of Footings Against Frost Action

Perimeter foundations of heated structures are required to be insulated against the deleterious effects of frost action. A minimum of 1.5 m of soil cover, or a minimum of 0.6 m of soil cover in conjunction with adequate foundation insulation, should be provided.

Exterior unheated foundations, such as those for isolated exterior piers, are more prone to deleterious movement associated with frost action than the exterior walls of the heated structure and require additional protection, such as soil cover of 2.1 m, or an equivalent combination of soil cover and foundation insulation.

6.3 Excavation Side Slopes

The temporary excavation side slopes anticipated should either be excavated to acceptable slopes or retained by shoring systems from the beginning of the excavation until the structure is backfilled. It is expected that sufficient room will be available for the greater part of the excavation to be undertaken by open-cut methods (i.e. unsupported excavations).

The excavation side slopes above the groundwater level, extending to a maximum depth of 3 m, should be cut back at 1H:1V or flatter. The flatter slope is required for excavation below the groundwater level. The subsurface soil is considered to be mainly a Type 2 and 3 soil according to the Occupational Health and Safety Act and Regulations for Construction Projects.

Excavated soil should not be stockpiled directly at the top of excavations and heavy equipment should maintain a safe working distance from the excavation sides.

Slopes in excess of 3 m in height should be periodically inspected by the geotechnical consultant in order to detect if the slopes are exhibiting signs of distress.

It is recommended that a trench box be used at all times to protect personnel working in trenches with steep or vertical sides. It is expected that services will be installed by “cut and cover” methods and excavations will not be left open for extended periods of time.

6.4 Pipe Bedding and Backfill

Bedding and backfill materials should be in accordance with the most recent Material Specifications and Standard Detail Drawings from the Department of Public Works and Services, Infrastructure Services Branch of the City of Ottawa.

A minimum of 150 mm of OPSS Granular A should be placed for bedding for sewer or water pipes when placed on a soil subgrade. The bedding should extend to the spring line of the pipe. Cover material, from the spring line to a minimum of 300 mm above the obvert of the pipe, should consist of OPSS Granular A (concrete or PSM PVC pipes) or sand (concrete pipe). The bedding and cover materials should be placed in maximum 225 mm thick lifts and compacted to 98% of the SPMDD.

It should generally be possible to re-use the moist (not wet) site-generated fill above the cover material if the excavation and filling operations are carried out in dry weather conditions.

Where hard surface areas are considered above the trench backfill, the trench backfill material within the frost zone (about 1.8 m below finished grade) should match the soils exposed at the trench walls to minimize differential frost heaving. The trench backfill should be placed in maximum 300 mm thick loose lifts and compacted to a minimum of 95% of the material’s SPMDD. All cobbles larger than 200 mm in their longest direction should be segregated from re-use as trench backfill.

6.5 Groundwater Control

Based on our observations, it is anticipated that groundwater infiltration into the excavations should be low to moderate and controllable using open sumps. The contractor should be prepared to direct water away from all bearing surfaces and subgrades, regardless of the source, to prevent disturbance to the founding medium.

Groundwater Control for Building Construction

Under the current regulations enacted by the Ministry of Environment, Conservation and Parks (MECP), any dewatering in excess of 50,000 L/day requires a registration on the Environmental Activity and Sector Registry (EASR), provided that dewatering is related to construction. If the dewatering is not related to construction, a Permit to Take Water obtained from the MECP will be required.

In the event that an EASR is required to facilitate dewatering of the proposed development, a minimum of three to four weeks should be allotted for completion of the EASR registration and the Water Taking and Discharge Plan, to be prepared by a Qualified Person as stipulated under O.Reg. 63/16. Should a Permit to Take Water be required, a minimum of five to six months should be allotted for completion of the permit, due to the minimum review period imposed by the MECP.

Impacts to Neighbouring Properties

The proposed buildings will be a slabs-on-grade construction; therefore, the excavations for these buildings are not expected to extend below the groundwater level. Accordingly, dewatering is not anticipated, and impacts to adjacent properties as a result of dewatering or excavation is not anticipated.

6.6 Winter Construction

Precautions must be taken if winter construction is considered for this project. The subsoil conditions at this site consist of frost susceptible materials. In the presence of water and freezing conditions, ice could form within the soil mass. Heaving and settlement upon thawing could occur.

In the event of construction during below zero temperatures, the founding stratum should be protected from freezing temperatures by the use of straw, propane heaters and tarpaulins or other suitable means. In this regard, the base of the excavations should be insulated from sub-zero temperatures immediately upon exposure and until such time as heat is adequately supplied to the building and the footings are protected with sufficient soil cover to prevent freezing at founding level.

Trench excavations and pavement construction are also difficult activities to complete during freezing conditions without introducing frost in the subgrade or in the excavation walls and bottoms. Precautions should be taken if such activities are to be carried out during freezing conditions. Additional information could be provided, if required.

6.7 Corrosion Potential and Sulphate

The results of analytical testing on the soil samples retrieved by others show that the sulphate content is less than 0.1%. These results are indicative that Type 10 Portland cement (normal cement) would be appropriate for this site. The chloride content and the pH of the samples indicate that they are not significant factors in creating a corrosive environment for exposed ferrous metals at this site, whereas the resistivity is indicative of an aggressive corrosive environment.

6.8 Slope Stability Assessment

The slope conditions at the northern limits of the site were reviewed by Paterson field personnel during the current investigation and previous geotechnical investigations. Two (2) slope cross-sections (Sections A-A' and B-B') were studied, which are considered to be the worst-case scenarios. The cross-section locations are presented on Drawing PG7567-1 – Test Hole Location Plan in Appendix 2.

The existing slope, which extends down to a ditch, was generally observed to be vegetated with trees. No signs of active or historic erosion were observed along the slope face.

Paterson completed two sets of analyses as part of the current study. The first analysis was completed with the slope unreinforced and in its current configuration; the second was completed taking into consideration a reinforced slope using a retaining wall or mechanically stabilized earth (MSE) wall.

Slope Stability Analysis

The analyses of the slope stability were carried out using SLIDE, a computer program which permits a two-dimensional slope stability analysis using several methods, including Bishop's method and Morgenstern-Price method, which are widely used and accepted analysis methods. The program calculates a factor of safety, which represents the ratio of the forces resisting failure to those favouring failure. Theoretically, a factor of safety of 1.0 represents a condition where the slope is stable.

However, due to intrinsic limitations of the calculation methods and the variability of the subsurface soil and groundwater conditions, a factor of safety greater than 1.0 is generally required for the failure risk to be considered acceptable. A minimum factor of safety of 1.5 is generally recommended for conditions where the slope failure would comprise permanent structures.

An analysis considering seismic loading was also completed. A horizontal acceleration of 0.2035 g was considered for the sections under seismic loading conditions. A factor of safety of 1.1 is considered to be satisfactory for stability analyses including seismic loading.

The cross-sections were analyzed taking into consideration the existing conditions observed during our site visit, and our review of the available soils information and topographic mapping. Subsoil conditions at the cross-sections were inferred based on nearby boreholes and general knowledge of the area's geology.

The effective and total soil strength parameters used for the analyses were chosen based on the subsoil information recovered during the previous investigations. The effective strength soil parameters used for the static and seismic analyses are presented in Table 6 below.

Table 6 – Total Effective and Total Soil and Material Parameters

Soil Layer	Unit Weight (kN/m^3)	Friction Angle (degrees)	Cohesion (kPa)
Dynamic Compacted Granular Fill	21	35	0
Engineered Fill	21	36	0
Existing Fill	20	34	0
Grey Silty Sand	20	35	0
Glacial Till	20	35	1
Bedrock	22	-	1,000

Static Loading Analysis

Paterson performed two sets of analyses for the slope, the first with the slope unreinforced, and the second reinforced using an MSE wall. The results of the static analyses for the unreinforced and reinforced slopes at Sections A-A' and B-B' are shown on Figures 2A, 2C, 3A, and 3C located in Appendix 2. For the proposed unreinforced conditions, the factor of safety was found to be 0.34 and 0.44 at Sections A-A' and B-B', respectively, while the factor of safety of the reinforced slope exceeded 1.5 at both cross-section locations.

Based on these results, the proposed reinforced slope is considered to be stable under static loading, while the unreinforced slope requires a Stable Slope Allowance to achieve a factor of safety of 1.5 under static conditions.

Seismic Loading Analysis

Paterson performed two sets of analyses for the slope, the first with the slope unreinforced, and the second reinforced using an MSE wall.The results of the seismic analyses for the unreinforced and reinforced slopes at Sections A-A' and B-B' are shown on Figures 2B, 2D, 3B, and 3D in Appendix 2. For the proposed unreinforced conditions, the factor of safety was found to be 0.386 and 0.254 at Sections A-A' and B-B', respectively, while the factor of safety of the reinforced slope exceeded 1.1 at both cross-section locations.

Based on these results, the proposed reinforced slope is considered to be stable under seismic loading, while the unreinforced slope requires a Stable Slope Allowance to achieve a factor of safety of 1.1 under seismic conditions.

Geotechnical Setback – Limit of Hazard Lands

Under the existing slope conditions (unreinforced), Stable Slope Allowances of 11.1 and 25.7 m are required at cross-sections A-A' and B-B' respectively to achieve the appropriate factors of safety under static and seismic conditions. In addition to the Stable Slope Allowances, Toe Erosion and Erosion Access Allowances of 2 m and 6 m, respectively, are required from the top of the slope. **Therefore, Limit of Hazards Lands setbacks of 19.1 and 33.7 m are required at cross-sections A-A' and B-B', this is shown on the attached Drawing PG7567-1 – Test Hole Location Plan in Appendix 2.**

However, for the reinforced case where the slope is supported with an MSE wall or retaining wall, sufficient factors of safety are present under static and seismic conditions such that Stable Slope Allowance setbacks are not required. Further, erosion protection will be incorporated into the MSE wall design such that a Toe Erosion Allowance is not required for the reinforced case. Also, since the slope will have suitable factors of safety and will have erosion protection, an Erosion Access Allowance will not be required for future repair of the slope. **Accordingly, no Limit of Hazard Lands setback is required for the reinforced case where the slope is supported with an MSE or retaining wall.**

The design of the MSE wall can be prepared during the detailed design stage of the project. The MSE wall design will need to be stamped by a Professional Engineer licensed in the province of Ontario, and will need to be reviewed by Paterson to confirm that it is in accordance with the geotechnical design recommendations provided in this report.

6.9 Global Stability Analysis of the Proposed Retaining Wall

Paterson completed the design of the proposed retaining wall along the north property line adjacent to Rideau Road. A global stability analysis of the proposed retaining wall was completed, and the results are provided in Paterson Group Memorandum PG7567-MEMO.03, included in Appendix 5 of the current report.

7.0 Recommendations

It is a requirement for the foundation design data provided herein to be applicable that a material testing and observation program be performed by the geotechnical consultant. The following aspects of the program should be performed by Paterson:

- ❑ Review of the final design grading and servicing details from a geotechnical perspective.
- ❑ Review and inspection of the installation of the foundation drainage systems, if applicable.
- ❑ Observation of all bearing surfaces prior to the placement of concrete.
- ❑ Sampling and testing of the concrete and fill materials.
- ❑ Periodic observation of the condition of unsupported excavation side slopes in excess of 3 m in height, if applicable.
- ❑ Observation of all subgrades prior to backfilling.
- ❑ Field density tests to determine the level of compaction achieved.
- ❑ Sampling and testing of the bituminous concrete including mix design reviews.

All excess soils, with the exception of engineered crushed stone fill, generated by construction activities that will be transported on-site or off-site should be handled as per *Ontario Regulation 406/19: On-Site and Excess Soil Management*.

A report confirming that these works have been conducted in general accordance with our recommendations could be issued upon request, following the completion of a satisfactory material testing and observation program by Paterson

With every community, we redefine what's possible.

Stantec is a global leader in sustainable engineering, architecture, and environmental consulting. The diverse perspectives of our partners and interested parties drive us to think beyond what's previously been done on critical issues like climate change, digital transformation, and future-proofing our cities and infrastructure. We innovate at the intersection of community, creativity, and client relationships to advance communities everywhere, so that together we can redefine what's possible.