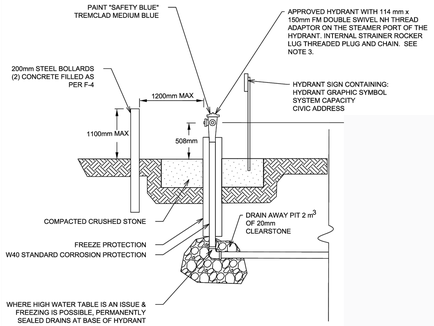

DRY HYDRANT DETAIL

(BASED ON OTTAWA W53 DETAIL)

SCALE = NTS.

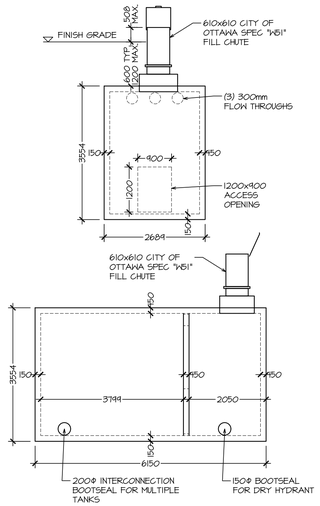

BURIED WATER STORAGE TANK DETAIL

SCALE = 1:75

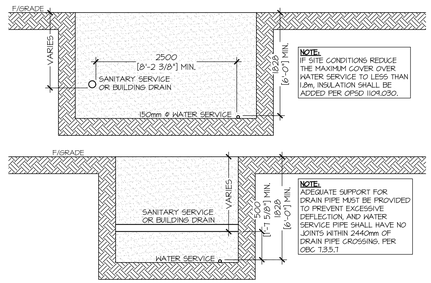

SERVICE CROSSING DETAIL

SCALE = 1:50

APPROVED
By Adam Brown at 12:28 pm, Apr 29, 2026

ADAM BROWN
MANAGER , DEVELOPMENT REVIEW RURAL
PLANNING, DEVELOPMENT & BUILDING SERVICES
DEPARTMENT, CITY OF OTTAWA

SITE LEGEND:

+ 00.00	- EXIST. GRADE ELEVATION
00.00	- PROPOSED GRADE ELEVATION
00.00	- PROPOSED DITCH ELEVATION
	- FLOW / DIRECTION
—— H ——	- HYDRO
—— STM ——	- STORM PIPE
—— SAN ——	- SANITARY PIPE
—— W ——	- WATER LINE
—— G ——	- GAS LINE
—— B ——	- BELL LINE
—— X ——	- FENCE
M.H.	- MAN HOLE
H.P.	- HYDRO POLE
LS	- LIGHT STANDARD
F.H.	- FIRE HYDRANT
C.B.	- CATCH BASIN
D.I.	- DITCH INLET
	- ACCESS / ENTRANCE
	- WATER LINE CURB STOP
	- SOD / GRASS / LANDSCAPE
	- EXISTING GRAVEL
#?	- DENOTES REVISION NUMBER

SEPTIC DESIGN		
DAILY DESIGN SANITARY FLOW RATE (DDSF)		
		TOTAL VOLUME
OFFICE AREA (75L/9.2 m2)	186.3 m2	1,502.4 L
LOADING DOORS (150 L EA.)	4 DOORS	600 L
	TOTAL:	2,102.4 L/day
TANK SIZING		
COMMERCIAL	Q (DDSF) x 3	6,307.2 L
	TANK SIZE:	7,048 L
ELJEN MODULE BED SIZING		
T (PERCOLATION RATE)	10 min/cm	NATIVE SOIL
Q (DDSF)	2,102.4 L/day	
ELJEN MODULES: Q/95	22.2	
NUMBER OF MODULES PROP.	24	
FILTER BED AREA (QT/400)	52.56 m2	
FILTER BED AREA PROP.	66 m2	

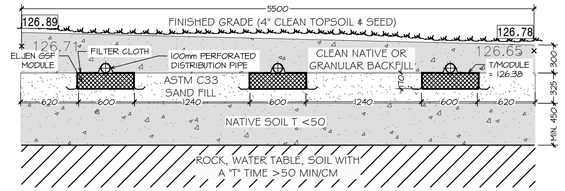

APPROXIMATE DEPTH OF GROUND WATER TABLE FROM BH-3 DETAILED IN THE GEOTECHNICAL REPORT

SEPTIC SYSTEM CROSS SECTION

SCALE = N.T.S

COPYRIGHT © 2025 *TaskForce Engineering Inc.*

THIS DRAWING AND DESIGN IS THE PROPERTY OF *TaskForce* Engineering Inc. AND SHALL NOT BE COPIED, REPRODUCED, ALTERED OR DISTRIBUTED IN WHOLE OR IN PART, WITHOUT THE EXPRESSED WRITTEN CONSENT OF *Taskforce* Engineering Inc..

THE CONTRACTOR SHALL VERIFY AND BE RESPONSIBLE FOR ALL DIMENSIONS AND SHALL REPORT ANY DISCREPANCY TO *Taskforce* Engineering Inc. BEFORE PROCEEDING WITH ANY WORK.

SITE PLAN NOTES:

1. ALL DIMENSIONS & NOTES MUST BE VERIFIED ON JOB SITE BY CONTRACTOR. ANY DISCREPANCIES SHALL BE REPORTED TO THE OWNER.
2. ALL UNDERGROUND WORK AND ABOVE GROUND WORK TO BE DONE IN ACCORDANCE WITH CURRENT CITY PLANS, STANDARDS & SPECS.
3. THE OWNER COVENANTS & AGREES NOT TO MAKE A MATERIAL CHANGE OR CAUSE A MATERIAL CHANGE TO BE MADE TO A PLAN, SPECIFICATION, DOCUMENT OR OTHER INFORMATION, ON THE BASIS OF WHICH THIS DRAWING WAS APPROVED BY THE CITY, WITHOUT NOTIFYING, FILING DETAILS WITH AND OBTAINING THE WRITTEN AUTHORIZATION OF THE CITY.
4. EXISTING ASPHALT;

   HEAVY DUTY ASPHALT;
   - 50mm HL3
   - 40mm HL8
   - 150mm (6") GRANULAR 'A', TYPE II
   - 300mm (12") GRANULAR 'B', TYPE I
5. ALL GRANULAR MATERIAL SHALL BE PLACED IN 300mm LIFTS AND COMPACTED TO 100% STANDARD PROCTOR.
6. INSTALL CONCRETE SIDEWALKS IN ACCORDANCE WITH OPSD-308.013 AND OPSD-3031.04 FOR SIDEWALK RAMP.
7. SILT FENCE AS REQUIRED PER OPSD 219.110
8. GRASSED AREAS SHALL BE SOD AND 4" MINIMUM TOPSOIL. HYDROSEED FOR SLOPES EXCEEDING 4:1 SOD & STAKE.
9. CONTRACTOR SHALL OBTAIN A R.O.W. WORK PERMIT FROM THE CITY OF QUINTE WEST PRIOR TO COMMENCING ANY WORK WITHIN THE MUNICIPAL ROAD ALLOWANCE.
10. UTILITY CUTS WITHIN THE MUNICIPAL ROAD ALLOWANCE TO BE RESTORED USING HEAVY DUTY ASPHALT STANDARDS.
11. CONNECTION OF ALL SANITARY AND STORM SEWERS TO CONFORM TO OPSD-1006.010
12. NO LIGHTING WILL BE DIRECTED ONTO ADJACENT PROPERTIES BUT WILL ONLY BE DIRECTED ONTO THE SUBJECT LANDS
13. ALL CURBING IN ACCORDANCE WITH OPSD - 600.110
14. BARRIER FREE SIGNAGE FOR PARKING AREA TO BE IN ACCORDANCE WITH OBC 3.8.3.1 (1)

OPSD REFERENCES

1. RIGID PIPE BEDDING, COVER AND BACKFILL — OPSD - 802.030
   EXCEPT a) USE "CLASS B-BEDDING" DETAIL ONLY FOR ALL PIPE BEDDINGS DELETE "CLASS C" - BEDDING" DETAIL.
   b) THE "GRANULAR BEDDING MATERIAL" IS TO BE GRANULAR 'A' CRUSHED MATERIAL.
   c) "COVER MATERIAL" IS TO BE SAND FILL
   d) DELETE "150 mm " FROM "NOTE 1" AND INSERT 225 mm FOR THE MINIMUM BEDDING DEPTH
   e) FOR A "WET TRENCH" CONDITION AS DETERMINED BY THE CITY ENGINEER:
      i) THE "GRANULAR BEDDING MATERIAL" IS TO BE AN "HL8 COARSE" GRADATION, CRUSHED LIMESTONE MATERIAL, AND
      ii) THE "COVER MATERIAL" IS TO BE LIMESTONE SCREENINGS OR GRANULAR 'A' CRUSHED MATERIAL.
2. PRECAST CONCRETE MAINTENANCE HOLE, 1200 mm DIAMETER, EXCEPT USE PRECAST MONOLITHIC BASE ONLY. — OPSD - 701.010
3. MAINTENANCE HOLE STEPS, HOLLOW — OPSD - 405.010
   EXCEPT DELETE "RECTANGULAR STAINLESS STEEL" STEP DETAILS. CAST IRON, SQUARE FRAME WITH CIRCULAR CLOSED OR OPEN.
4. COVER FOR MAINTENANCE HOLES — OPSD - 401.010
   EXCEPT DELETE "TYPE 'B' OPEN COVER".
5. CAST-IN-PLACE MAINTENANCE HOLE DROP — OPSD - 1003.010
   STRUCTURE TEE. EXCEPT THE INVERT OF THE INLET END OF THE 90 DEGREE BEND IS TO BE PLACED AT THE "SPRINGLINE" OF THE MAIN SEWER PIPE.
6. SEWER SERVICE CONNECTIONS FOR RIGID MAIN PIPE SEWER, EXCEPT: — OPSD - 1006.010
   a) THE BEDDING AND COVER MATERIALS ARE TO BE SUPPLIED AND INSTALLED IN ACCORDANCE WITH OPSD-802.030
   b) FACTORY MADE TEES OR WYES ARE NOT REQUIRED FOR SANITARY SERVICE CONNECTIONS TO THE MAIN SEWER PIPE UNLESS SPECIFIED.
7. CONCRETE SIDEWALK — OPSD - 310.010
8. CONCRETE BARRIER CURB WITH WIDE GUTTER — OPSD - 600.010
9. CONCRETE BARRIER CURB — OPSD - 600.110

No.	DATE	REVISION(S)	BY
5	JAN.29/26	RE-ISSUED FOR SITE PLAN APPROVAL	ERB
4	DEC. 19/25	REVISED SEPTIC AREA	ERB
3	OCT. 14/25	ISSUED FOR TENDER	DGT
2	SEPT.22/25	RE-ISSUED FOR SITE PLAN APPROVAL	ERB
1	AUG. 13/25	ISSUED FOR SITE PLAN APPROVAL	ERB

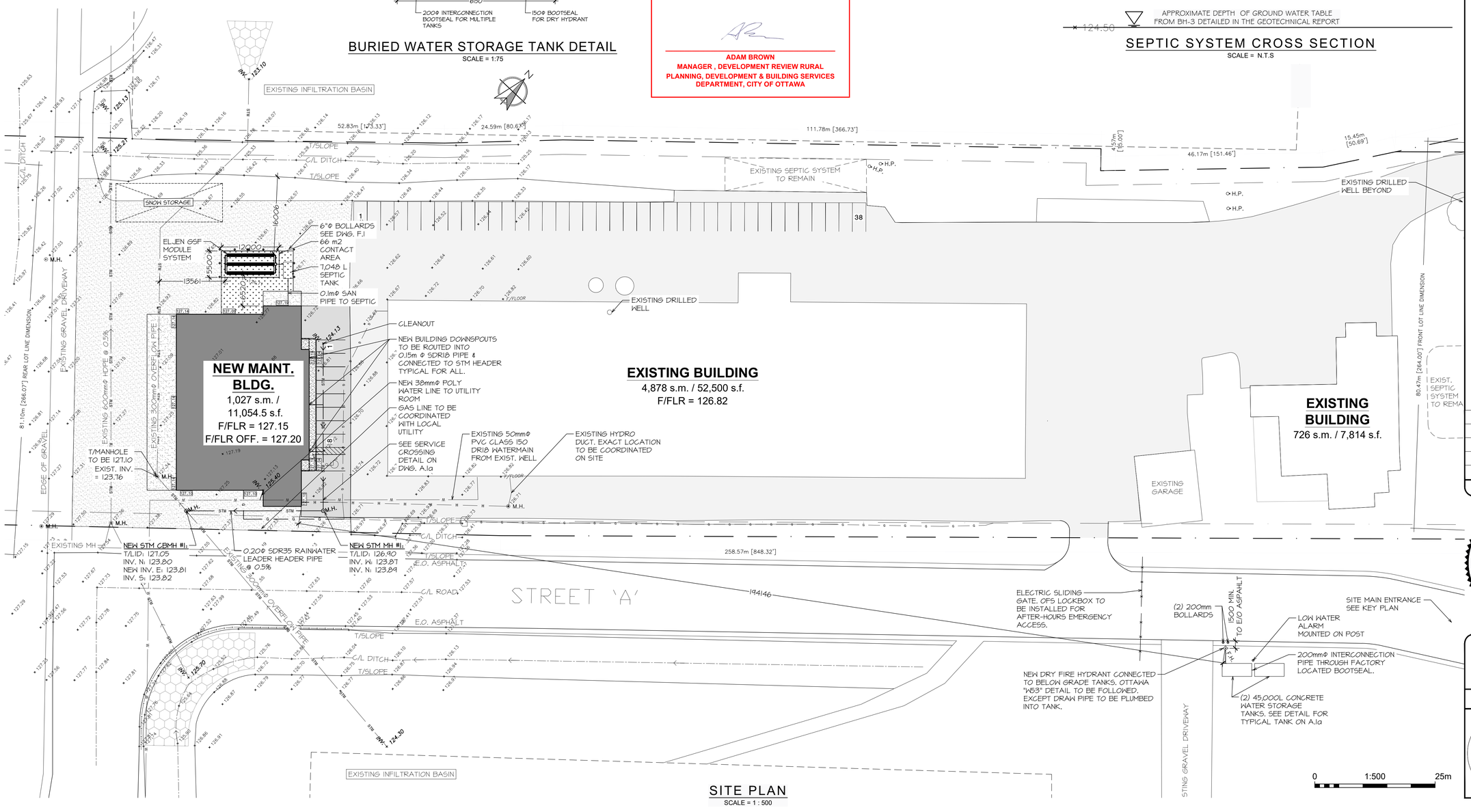

SITE PLAN

SCALE = 1 : 500

TaskForce Engineering Inc.
24 Newberry Street
Suite 201
Belleville, Ontario
K8N 3N3
Voice (613) 966-5600
Fax (613) 966-5701
www.taskforce-eng.com

NEW 11,054 s.f. BUILDING for
WASTE MANAGEMENT OF CANADA CORP
2413 CARP RD.
OTTAWA, ON

SERVICING PLAN AND SEPTIC DETAILS

LICENSED PROFESSIONAL ENGINEER — Jan.29/2026 — E. R. BURTT 100515244 — PROVINCE OF ONTARIO

DATE: JUNE 2025	CONTRACT No.: 2511	
CHECKED BY:	DRAWING No.:	A.1a
DESIGNED BY:		
DRAWN BY: ERB		
SCALE: AS NOTED		

CITY FILE No. D07-12-25-0116 CITY PLAN No. 19427