Report
Project: 30282806-6.4.3

8201 CAMPEAU DRIVE SERVICING BRIEF

Prepared for 8201 Campeau Drive Inc.
by ARCADIS

March 2026

Table of Contents

1 INTRODUCTION 4
1.1 Guidelines and Standards 4
1.2 Pre-Consultation Meeting 5
1.3 Geotechnical Concerns 5
2 WATER DISTRIBUTION 6
2.1 Existing Conditions 6
2.2 Design Criteria 6
2.2.1 Water Demands 6
2.2.2 System Pressures 6
2.2.3 Fire Flow Rate 7
2.2.4 Boundary Conditions 7
2.3 Proposed Water Plan 7
3 WASTEWATER 9
3.1 Existing Conditions 9
3.2 Proposed Sewers 9
3.2.1 Design Flow: 9
3.2.2 Population Density: 9
4 SITE STORMWATER MANAGEMENT 11
4.1 Existing Conditions 11
4.2 Design Criteria 11
4.2.1 Infiltration 12
4.2.2 Infiltration Detailed Calculations 13
4.3 Stormwater Management 15
4.3.1 Water Quantity Control 15
4.3.2 Water Quality Control 17
5 SEDIMENT AND EROSION CONTROL PLAN 18
5.1 General 18
5.2 Trench Dewatering 18
5.3 Bulkhead Barriers 18
5.4 Seepage Barriers 18
5.5 Surface Structure Filters 18

6 CONCLUSIONS & RECOMMENDATIONS 19
6.1 Conclusions 19
6.2 Recommendations 19

List of Appendices

APPENDIX A

Site Plan for 8201 Campeau Drive
City of Ottawa Pre-Consultation Meeting Notes
City of Ottawa Study and Plan Identification Checklist
30282806-001 General Plan of Services

APPENDIX B

Boundary Conditions
Water Demand Calculations
FUS Calculations
Water Model Results

APPENDIX C

Sanitary Sewer Design Sheet
30282806-400 Sanitary Drainage Area Plan

APPENDIX D

Storm Sewer Design Sheet
Excerpt of McIntosh Perry Report Page 12
30282806-500 Storm Drainage Area Plan
Modified Rational Method SWM Calculations
Runoff Coefficient Calculations
Excerpt of Stantec Report Infiltration
Infiltration Gallery Calculations
EZ Storm Underground Storage Detail Sheets
EZ Storm Cross Section Specification Sheet
Watts Adjustable Flow Control for Roof Drains
Excerpt of Section 5.2 from Stantec Kanata Commons Report

APPENDIX E

30282806-900 Erosion and Sediment Control Plan
30282806-010 Notes and Legends
30282806-200 Grading Plan

1 INTRODUCTION

8201 Campeau Drive is located at the South-East intersection of Campeau Drive and Taggart Road in Ottawa, Ontario. This site is Phase 1 of a larger development consisting of residential dwelling units, commercial units and greenspace amenity spaces. The site is comprised of two buildings with a communal link separating the two buildings and is abutted by Campeau Drive to the North, Taggart Road to the West and existing undeveloped land to the East and South. Vehicle access to the site will be provided on Taggart Road. Pedestrian access to the building entrances will be provided from Campeau Drive and Taggart Road.

Arcadis Professional Services (Canada) Inc. (formerly IBI Group) has been retained by 8201 Campeau Drive Inc. to provide professional engineering services for 8201 Campeau Drive. The subject site is approximately 1.23 ha and consists of 176 apartment units in building 1 and 147 apartment units in building 2 for a total of 323 dwelling units. A dedicated park parcel has been allocated to this site with an approximate area of 0.17 ha. Refer to key plan on **Figure 1.1** for Site location.

Figure 1.1 Site Location

The proposed servicing design conforms to current City of Ottawa and MECP design criteria.

1.1 Guidelines and Standards

This evaluation takes into consideration the City of Ottawa Sewer Design Guidelines (OSDG) (October 2012), and the February 2014 Technical Bulletin ISDTB-2014-01, the September 2016 Technical Bulletin PIEDTB-2016-01, the June 2018 Technical Bulletin ISTB-2018-04, October 2019 Technical Bulletin 2019-01, and the July Technical Bulletin 2019-02.

It also considers the City of Ottawa Water Distribution Design Guidelines (OWDDG), and the 2010 Technical Bulletin 2010-02, the 2014 Technical Bulletin 2014-02, the 2018 Technical Bulletin 2018-02 and the 2020 Technical Bulletin 2020-02.

All specifications are as per current City of Ottawa standards and specifications, and Province of Ontario (OPSS/D) standards, specifications and drawings.

1.2 Pre-Consultation Meeting

The City of Ottawa hosted a pre-consultation meeting on March 11th, 2025. Notes of the meeting and City of Ottawa Planning Checklist are provided in **Appendix A**. There were no major engineering concerns flagged in this meeting.

1.3 Geotechnical Concerns

A geotechnical report entitled "Geotechnical Investigation – Proposed Development – 8201 Campeau Drive – Ottawa, Ontario" Report PG6934-1 dated October 4, 2024 by Paterson Group Inc. has been prepared for the subject site.

The objective of the investigation report include:

- Determination of the subsoil and groundwater conditions;
- Provision of geotechnical recommendations pertaining to the design and development of the subject site including construction considerations.

Among other items, the report comments on the following:

- Site grading;
- Foundation design;
- Pavement structure;
- Infrastructure construction;
- Groundwater control;

The report concludes that the subject site is considered suitable for the proposed development.

2 WATER DISTRIBUTION

2.1 Existing Conditions

8201 Campeau Drive will be serviced with potable water from the City of Ottawa's existing watermains. There is an existing 203 mm diameter PVC watermain on Taggart Road and a 600mm diameter watermain on Campeau Drive. For the purpose of this development, only connections to Taggart Road will be considered.

2.2 Design Criteria

2.2.1 Water Demands

The proposed development consists of 323 apartment units, split into two buildings. In order to calculate water demand rates, the per unit population density and consumption rates are taken from Tables 4.1 and 4.2 of the Ottawa Design Guidelines – Water Distribution were used and are summarized as follows:

- 1 Bedroom Apartment — 1.4 person per average apartment
- 2 Bedroom Apartment — 2.1 person per average apartment
- 3 Bedroom Apartment — 3.1 persons per average apartment

- Average Day Demand — 280 l/cap/day
- Peak Daily Demand — 700 l/cap/day
- Peak Hour Demand — 1,540 l/cap/day

A water demand calculation sheet is included in **Appendix B** and the total water demands are summarized as follows:

- Average Day — 1.59 l/s
- Maximum Day — 3.99 l/s
- Peak Hour — 8.77 l/s

2.2.2 System Pressures

The 2010 City of Ottawa Water Distribution Guidelines states that the preferred practice for the design of a new distribution system is to have normal operating pressures range between 345 kPa (50 psi) and 552 kPa (80 psi) under maximum daily flow conditions. Other pressure criteria identified in the guidelines are as follows:

Minimum Pressure	Minimum system pressure under peak hour demand conditions shall not be less than 276 kPa (40 psi).
Fire Flow	During the period of maximum day demand, the system pressure shall not be less than 140 kPa (20 psi) during a fire flow event.

Maximum Pressure	Maximum pressure at any point in the distribution system in unoccupied areas shall not exceed 689 kPa (100 psi). In accordance with the Ontario Building/Plumbing Code the maximum pressure should not exceed 552 kPa (80 psi) in occupied areas. Pressure reduction controls may be required for buildings when it is not possible/feasible to maintain the system pressure below 552 kPa.

2.2.3 Fire Flow Rate

The Fire Underwriters Survey was used to determine the fire flow for the site. The calculations result in a fire flow of 18,000 L/min (300.0 L/s) based on wood frame building construction. A copy of the FUS calculation is included in **Appendix B**.

2.2.4 Boundary Conditions

The City of Ottawa has provided a hydraulic boundary condition at the connection locations off Taggart Road. A copy of the boundary condition received June 11th, 2025 is included in **Appendix B** and is summarized as follows:

BOUNDARY CONDITIONS		
SCENARIO	Connection 1 HGL (m)	Connection 2 HGL (m)
Existing Condition (Pre-SUC Pressure Zone Reconfiguration)		
Average Day	162.0	162.0
Peak Hour	155.8	155.8
Max Day + Fire Flow (183 l/s)	133.5	132.2

2.3 Proposed Water Plan

The site will be serviced by a connection to the existing 200 mm watermain on Taggart Road. One connection will be included to the West entrance of Building A at the intersection to the existing Kanata Commons commercial site. An existing connection has previously been installed in anticipation of the proposed residential development.

Building B will be serviced by extending a new 200mm diameter watermain in J way to accommodate future buildings. One service will be provided from J Way and include an additional connection within the shared parking garages in order to accommodate a double service connection to meet water demands.

There is one hydrant proposed on site, there are two existing hydrants on Campeau Drive adjacent to buildings A and B.

A hydraulic model has been created for the subject site using the InfoWater 12.4 program. The model includes the hydraulic boundary condition and the existing main on Taggart Road. The hydraulic model was run under basic day, maximum day with fire flows and under peak hour conditions, watermains are sized to provide sufficient pressure and to deliver the required fire flow, the watermains on site are 200mm in diameter in order to provide the required pressures. Results of the hydraulic analysis for the site is included in **Appendix B** and is summarized as follows:

SCENARIO	RESULTS
Basic Day (Max HGL) Pressure (kPa)	641.8-651.6 kPa
Maximum Day plus Fire Flow Design Fire Flow @ 140 kPa (20 psi) Residual Pressure	184.7 l/s
Peak Hour Pressure (kPa)	580.8-590.8 kPa

A comparison of the results and design criteria is summarized as follows:

Maximum Pressure	Under Basic Day all nodes have pressure that exceeds 552 kPa (80 psi), therefore pressure reducing control is required for the buildings. There is no area where the pressure exceeds the maximum level of 689 kPa (100 psi) in unoccupied areas.
Minimum Pressure	The lowest minimum pressure during peak hour conditions is 580.8 kPa which exceeds the minimum 276 kPa (40 psi) requirement.
Fire Flow	For the proposed hydrant at the southeast corner of the site, the maximum design flow is 184.7 l/s which is below the 300 l/s rate from the FUS calculation. The design flow is expected to increase to over 300 l/s once the watermain is looped back to the Taggart Road watermain. The two hydrants on Campeau Drive are expected to have fire flows at 300 l/s as they are fed from an existing 600 mm watermain. Further analysis of the hydrants can be conducted to determine the actual design fire flow and the on site hydrant can be looped back to the Taggart Road watermain.

Four hydrants are available to service the subject property. Three of these hydrants are within 75m of the building's Siamese connection and one is within 150m. With three hydrants within 75m of the building and one hydrant within 150m of the building, the minimum number of hydrants needed to deliver the required fire flow to the structure is being provided in accordance with Technical Bulletin ISTB-2018-02 dated March 21, 2018.

BUILDING ID	FIRE FLOW DEMAND (L/MIN)	FIRE HYDRANT(S) WITHIN 75M (5,700 L/MIN)	FIRE HYDRANT(S) WITHIN 150M (3,800 L/MIN)	COMBINED FIRE FLOW (L/MIN)
8201 Campeau	18,000	3	1	20,900

3 WASTEWATER

3.1 Existing Conditions

The proposed site at 8201 Campeau Drive is located within the City of Ottawa where sanitary flows ultimately to the Ottawa Wastewater Treatment Plant at 395 Terry Fox Drive. There is an existing 200mm sanitary sewer bulkhead in Taggart Road at the property line that was previously installed in anticipation of the subject site, which will be utilized to service the dwelling units in Building A. It is proposed to extend the sanitary sewer further South to the intersection of Taggart Road and J Way, and continue East along J Way to the site limits. This proposed sanitary sewer extension along Taggart Road and J Way will provide a separate service connection directly to Building B and has been sized to accommodate future development capacity.

Per the Kanata Commons Commercial Development, Taggart Realty, Kanata West Servicing Report completed by Stantec in December 2014, a design flow of 1.29 L/s was calculated from the commercial site West of the subject site. This calculated design flow was included in the sanitary sewer design sheet as a fixed flow for the sanitary sewer runs in Taggart Road. The design provided by Stantec provided an estimate flow of 7.11 L/s for the subject site under the previous assumption that the subject site would be commercial.

3.2 Proposed Sewers

All on-site sewers have been designed to City of Ottawa and MECP design criteria which include but are not limited to the below listed criteria. The detailed sanitary sewer design sheet which is included in **Appendix C** illustrates the population densities and sewers which provide the necessary outlets. The design wastewater criteria for this analysis area:

3.2.1 Design Flow:

Average Residential Flow	-	280 l/cap/day
Peak Residential Factor	-	Modified Harmon Formula
Infiltration Allowance	-	0.33 l/sec/Ha
Minimum Pipe Size	-	200mm diameter

3.2.2 Population Density:

1 Bedroom Apartments	-	1.4 people per unit
2 Bedroom Apartments	-	2.1 people per unit
3 Bedroom Apartments	-	3.1 people per unit
Average Apartments	-	1.8 people per unit

In order to calculate the projected average dwelling units and capacity requirements in future phases, a criteria of 1.8 people per unit was used for the total estimated unit count.

3.3 Future Development

As shown in the sanitary sewer design sheet, the current and proposed wastewater design is sufficient for Phase 1. Due to the decision to switch from the originally proposed commercial area to mid-rise and high-rise residential buildings, the ultimate sanitary flow is higher than originally anticipated. Before full build-out, existing downstream sanitary sewer runs will have to be altered in order to accommodate the additional flow. To accommodate the required design flow, it is proposed

to upsize the existing sanitary sewers on Taggart Road (EXMH10A-EXMH9A to EXMH9A-EXMH8A) to 300mm diameter sewers, maintaining the same slope. The calculations providing support to this proposed change is shown in the sanitary sewer design sheet, which includes “FULL BUILDOUT – NO UPSIZE”, “PHASE 1 ONLY”, and “FULL BUILDOUT – UPSIZE” conditions. Since plans may be altered in advance of full build-out, the upsize in sanitary sewers is proposed to be designed and completed at a later date, when required. All new sanitary sewers are able to accommodate the tributary ultimate population that is proposed to outlet through Taggart Road.

It is assumed that some sanitary drainage and population for the remainder of the site will be directed East to Didsbury Road.

4 SITE STORMWATER MANAGEMENT

4.1 Existing Conditions

The subject site is currently undeveloped with no known stormwater management control measures. Stormwater currently flows overland to the South-West of the site.

An existing 300mm storm sewer stub, complete with temporary catch basin, is located within the site from the previous Kanata Commons commercial development. The stub will be utilized to service Building A. This stub was designed and installed in anticipation of this proposed development.

It is proposed that a new storm maintenance hole will be installed at the intersection of J Way and extended to the Eastern site limits in order to service Building B and future development separately. This proposed storm extension has been designed in anticipation of future overall development loads.

Catchment areas can be referenced in the Storm Drainage Area Plan in **Appendix D**.

4.2 Design Criteria

The stormwater system for the subdivision was designed following the principles of dual drainage, making accommodations for both major and minor flow.

Some of the key criteria include the following:

- Design Storm — 1:2-year return (Ottawa)
- Rational Method Sewer Sizing
- Initial Time of Concentration — 10 minutes
- Runoff Coefficients
  - Softscape Areas — C = 0.20
  - Hardscape Areas — C = 0.90
- Pipe Velocities — 0.80 m/s to 3.0 m/s
- Minimum Pipe Size — 250 mm diameter

4.2.1 Infiltration

The Taggart-Loblaws Design Brief, dated June 2013, maintained the infiltration targets established within previous studies completed for the Kanata West Area, namely the Kanata West Master Servicing Study. The targets provided within the KWMSS design brief indicated that a range of 50-70 mm/year of runoff be infiltrated from the area. The infiltration target for this site is therefore to be considered as 70mm/year (see **Appendix D** for study excerpt).

The design of the infiltration gallery is to be as per MECP requirements and the bottom of storage media will be minimum 1m above the high groundwater. The lowest bottom of media storage is 94.425m (94.575m header pipe elevation – 0.15m depth of clear stone base), or approximately 1.4m deep. Based on the geotechnical report the current groundwater table onsite is approximately 4.9-5.5m deep.

The proposed infiltration gallery has been sized to maximize infiltration potential for the site. The sizing was based on the amenity area catchment, and daily precipitation data (using wet year and dry year to establish overflow volume based on measured historical data). The maximum potential infiltration of the gallery was estimated using gallery size and precipitation norms for the area [920mm] and the overflow was then subtracted. Infiltration was assumed through the bottom surface area, with percolation rates established based on geotechnical investigation of the site determining that area generally ranges from silty sand to silty clay. The sizing of the gallery has been tailored for the proposed catchment area. The below table provides summary of the infiltration calculations for the site, further details of the infiltration galleries are provided within the servicing drawing. Also, detailed design calculations are provided within **Appendix D**. These calculations are discussed in-depth in Section 4.2.2 of this report.

Table 4.2.1 - Infiltration Gallery Calculations Summary on Annual Basis

GALLERY	TRIB AREA (M2)	ANNUAL RUNOFF VOLUME (M3)	AVERAGE OVERFLOW VOLUME (M3)	AVERAGE ANNUAL VOLUME INFILTRATED (M3)
Amenity Area	2200	1214	30	1184

Where:

- Annual Runoff Volume is based on catchment area and 60% of the annual precipitation from the catchment available as runoff (920mm annual precipitation)
- Overflow Volume is based on building specific infiltration gallery sizing

The required infiltration will be provided by an infiltration gallery. The infiltration gallery will provide an estimated 996 m^3 of infiltration on an annual basis, or 80.3 mm/year for the 1.24ha site, above the required post-development rate of 70mm/year.

4.2.2 Infiltration Detailed Calculations

The Appendix C calculations have been broken down step-by-step below.
The volume of the infiltration gallery can be calculated as follows:

Volume = Width x Length x Depth x No. of Cells x Void Ratio
= 4m x 34.4m x 0.81m x 1 x 0.38
= 42.35 m3

The depth has been considered to be the height of the underground storage system (0.66m) plus the clear stone base (0.15m). In order to establish a range of function for the proposed infiltration gallery, precipitation data for a wet year and a dry year was used. Daily precipitation data was provided by the Government of Canada Climate Normals Data for Station Ottawa CDA. The data that was provided includes rainfall amounts from April 1st through October 31st. This rainfall (in mm) was converted into an average rainfall intensity (mm/hr) by taking the amount of rain and dividing by 24 hours. The rainfall available to the infiltration gallery was then determined to be the average rainfall intensity multiplied by the captured area (2200 m2) by the effective runoff percent (60%). To be conservative, the volume into the infiltration gallery was then capped at the volume of the gallery (42.35 m3) and assumed any overage would outlet through the overflow pipe. A percolation rate of 0.3495 m/day was used as an average for silty clay.

The amount of water that can infiltrate through the gallery from the bottom per day is as follows:

Infiltration = Surface Area of Infiltration Gallery x No. of Cells x Percolation Rate
= (4m x 34.4m) x 1 x 0.3495 m/day
= 48.09 m3/day

Therefore the maximum infiltration that the gallery can provide in one day is 48.09 m3. Since this value is above our conservative capped volume, the calculations will only show up to 48.09 m3/day of infiltration.

These calculations were applied to each “wet year” and “dry year” day’s rainfall quantities on the catchment area and the infiltration gallery’s overflow was tracked to be 53 m3 and 166 m3, respectively.

The function of the infiltration gallery during a wet year can then be determined as follows:

Runoff Percent = Overflow Volume / Precipitation Volume
= 53 m3 / 1056 m3
= 5.00%

Therefore, during a wet year it can be expected that 5.00% of the water that enters the infiltration gallery will overflow without being infiltrated. The same calculations were done for a “dry year” and yielded a result of 31.02%. On average, it can be expected that 18.01% of the water that enters the infiltration gallery will overflow and not be infiltrated.

Since the data only ranges from April to October, we cannot take the wet year Precipitation Volume of 1056 m3 and Overflow Volume of 53 m3 as the entire year’s volumes. The overflow percentage must be applied to the Available Volume for an annual precipitation. The annual precipitation is 920mm as provided by the Government of Canada Climate Normals Data for Station Ottawa CDA. The Available Volume can be calculated as follows:

Available Volume = Area of Catchment x (Annual Precipitation x Effective Runoff)
= 2200 m2 x (920mm x 0.60 / 1000 mm/m)
= 1214.4 m3

It is then possible to determine the overflow volume for a full wet year or dry year, as shown below for a wet year:

Overflow Volume = Available Volume x Overflow Percent
= 1214.4 m3 x 5.00%
= 60.7 m3

The infiltration volume is then the difference between the Available Volume and the Overflow Volume, or 1214.4m3 – 60.7m3 = 1153.7 m3/year. Repeating the same calculations for a dry year yields an infiltration volume of 837.7 m3/year (31.02%, 376.7m3 overflow). On average, the infiltration gallery is expected to infiltrate 995.7 m3/year, or 80.3 mm/year for the 1.24 ha site, which is above the target post-development rate of 70mm/year.

There will be some years with high intensity precipitation where the target will not be reached as the intensity will flow through the gallery before it has a chance to infiltrate, however the target has been met for an average year as required.

4.3 Stormwater Management

This site is designed to have minimal impact on adjacent properties grading, drainage, access, circulation, and privacy. This will be achieved by means of Water Quantity Controls.

4.3.1 Water Quantity Control

Per the McIntosh Perry Assessment of Adequacy of Public Services Report – 8201 Campeau Drive & 303 Didsbury Road (CCO-24-3115), the subject site will be limited to a maximum minor system release rate of 85 L/s/Ha (see excerpt in **Appendix D**). For a Phase 1 area of 1.24 Ha, that results in 105.40 L/s during a 100-year storm (see storm drainage plan in **Appendix D**).

However, the original report did not foresee the now-existing Taggart Road potentially becoming a public road in the future, and now the City and developer both have interest in maintaining that possibility. Taggart Road is not suited to control stormwater falling into its catchment areas with its minimal ponding availability. In order to remove the need for non-standard underground storage in the ROW, the catchbasins in Taggart Road will be unrestricted, which takes up the majority of the 105.40 L/s release rate for Phase 1. Similarly, there is also interest in maintaining the possibility of J Way being made public. J Way was designed with greater ponding volumes compared to Taggart Road and so it is able to be restricted, however as a pure private road would also have had underground storage to reduce its release rate.

Since the impact from Taggart Road will only be felt in Phase 1, and Phase 1 is only 20% of the ultimate area, some additional release rate was borrowed from the ultimate in order to allow Taggart Road to not have underground storage and maintain the ability to make it a public road in the future.

The reduced release rate will be achieved through a combination of inlet control devices (ICD's), underground storage and surface storage where possible.

Surface flows in excess of the site's allowable release rate will be stored on site and gradually released into the minor system to respect the site's allowable release rate. The surface flows and ponding allocated to this site plan are shown in the grading plan located in **Appendix E**.

Along the Northern perimeter of the site, the opportunity to capture and store runoff is limited due to grading constraints and building geometry. These areas will discharge uncontrolled to Campeau Drive. As aforementioned, the opportunity to capture and store runoff on Taggart Road is also not suitable as underground storage is not permitted in public Right of Ways. Due to this, all drainage areas between Building A and Taggart Road is considered uncontrolled flow. These areas are located at the perimeter of the site where it is necessary to tie into public boulevards and adjacent properties or in areas where ponding stormwater is undesirable.

Based on the proposed site plan, the total uncontrolled areas have been calculated to be 0.24 Ha. The runoff calculations for these uncontrolled areas have been calculated and provided in **Appendix D**. For the detailed storm drainage area plan for the site, refer to Drawing 500 in **Appendix D**.

Based on a 1:100-year event, the flow from the 0.24 Ha uncontrolled areas can be determined as:

$\mathbf{Q_{uncontrolled}}$ = **2.78** x $\mathbf{C_{100yr}}$ x $\mathbf{i_{100yr}}$ x **A** where:

C = Average runoff coefficient (100-year C-value, max 1.00)

$\mathbf{i_{100yr}}$ = Intensity of 100-year storm event (mm/hr)

= $1735.688 \times (T_c + 6.014)^{0.820}$ =178.56 mm/hr; where T_c = 10 minutes

A = Uncontrolled Area

Therefore, the uncontrolled release rates can be determined as:

$Q_{uncontrolled1}$ = **2.78** x C_{100yr} x i_{100yr} x **A**
= 2.78 x 0.85 x 178.56 x 0.09
= 37.97 L/s

$Q_{uncontrolled2}$ = **2.78** x C_{100yr} x i_{100yr} x **A**
= 2.78 x 1.00 x 178.56 x 0.15
= 74.46 L/s

The Maximum allowable release rate from the Phase 1 site can be determined by subtracting the Uncontrolled release rate from the minor system restricted flow rate.

$Q_{max} = Q_{restricted} - Q_{uncontrolled1} - Q_{uncontrolled2}$

Q_{max} = 105.40 L/s – 37.97 L/s – 74.46 L/s

$\mathbf{Q_{max}}$ **=** -7.03 **L/s**

Therefore, the total restricted flow rate through the minor system is calculated to have a design flow rate of **-7.03 L/s**. Due to the uncontrolled areas containing a larger release rate value than the recommended 85 L/s/ha per the aforementioned report (largely due to Taggart Road), it is proposed that additional release rate from the overall development area be resourced to the subject site. Per the detailing stormwater management calculations, it is proposed that an additional 60.53 L/s be allocated to this site to achieve desired release rate. This corresponds to approximately 12% of the ultimate release rate. The restricted rate will be achieved using Inlet Control Devices, underground storage, surface storage where possible and roof storage. A summary of the ICD's, their corresponding storage requirements, storage availability, and associated drainage areas have been provided below.

DRAINAGE AREA	ICD RESTRICTED FLOW (L/s)	100 YEAR STORAGE REQUIRED (m^3)	2 YEAR STORAGE REQUIRED (m^3)	STORAGE PROVIDED (m^3)
ROOF A	3.00	104.27	31.23	106.88
ROOF B	3.00	104.27	31.23	106.88
LINK	2.00	15.34	3.85	22.50
CB108	4.50	94.11	24.36	94.95
CBMH104	6.50	93.38	23.42	94.42
CICB100B	34.50	8.86	0.00	8.95
TOTAL	**53.50**	**420.22**	**114.07**	**434.57**

Detailed stormwater management calculations for the 2-year event, 100-year event, and stress test (100-year plus 20%) event can be found in **Appendix D**.

The proposed buildings will contain roof inlet controls that help control the amount of stormwater being released into the system. A specification sheet of Watts Adjustable Flow Control for Roof Drains is included in **Appendix D**.

There will be no surface ponding for the 2-year storm event per the rational method calculations, noting that a minimum concentration time of 10 min was considered for 2-year ponding. A 0.3m freeboard from downstream high points/maximum ponding elevations to first floor building openings is maintained in all scenarios including emergency overflow conditions.

Refer to geotechnical report for information regarding foundation drainage. Foundation drainage systems are to be independent and connected to the storm service downstream of any stormwater management control device.

4.3.2 Water Quality Control

Per the Kanata Commons Commercial Development, Taggart Realty, Kanata West Servicing Report completed by Stantec, the stormwater runoff captured by the minor system will be conveyed to the existing Kanata West SWM Pond 3 for water quality control and off-site quantity control up to the 10-year event. The SWM Pond is designed to provide an "enhanced" (80% TSS Removal) level of treatment prior to discharging to the Carp River.

The SWM pond is designed in accordance with the recommendations of the "Kanata West Master Servicing Study" (2006) and the "Carp River Watershed/Subwatershed Study" (2004). Refer to the "Taggart-Loblaws Subdivision Stormwater Management Facility Design Report" by Stantec Consulting Ltd. (June 2013) for specific details related to the stormwater management facility design.

An excerpt of Section 5.2 from the above-mentioned report relating to the water quality control has been included in **Appendix D**.

5 SEDIMENT AND EROSION CONTROL PLAN

5.1 General

During construction, existing stream and conveyance systems can be exposed to significant sediment loadings. Although construction is only a temporary situation, it is proposed to introduce a number of mitigative construction techniques to reduce unnecessary construction sediment loadings. These will include:

- groundwater in trench will be pumped into a filter mechanism prior to release to the environment;
- bulkhead barriers will be installed at the nearest downstream manhole in each sewer which connects to an existing downstream sewer;
- seepage barriers will be constructed in any temporary drainage ditches; and
- silt sacks will remain on open surface structure such as manholes and catchbasins until these structures are commissioned and put into use.

5.2 Trench Dewatering

During construction of municipal services, any trench dewatering using pumps will be discharged into a filter trap made up of geotextile filters and straw bales similar in design to the OPSD 219.240 Dewatering Trap. These will be constructed in a bowl shape with the fabric forming the bottom and the straw bales forming the sides. Any pumped groundwater will be filtered prior to release to the existing surface runoff. The contractor will inspect and maintain the filters as needed including sediment removal and disposal and material replacement as needed.

5.3 Bulkhead Barriers

At the first manhole constructed immediately upstream of an existing sewer, a ½ diameter bulkhead will be constructed over the lower half of the outletting sewer. This bulkhead will trap any sediment carrying flows, thus preventing any construction –related contamination of existing sewers. The bulkheads will be inspected and maintained including periodic sediment removal as needed.

5.4 Seepage Barriers

These barriers will consist of both the Light Duty Straw Bale Barrier as per OPSD 219.100 or the Light Duty Silt Fence Barrier as per OPSD 219.110 and will be installed in accordance with the sediment and erosion control drawing. The barriers are typically made of layers of straw bales or geotextile fabric staked in place. All seepage barriers will be inspected and maintained as needed.

5.5 Surface Structure Filters

All catchbasins, and to a lesser degree manholes, convey surface water to sewers. However, until the surrounding surface has been completed these structures will be covered to prevent sediment from entering the minor storm sewer system. Until rear yards are sodded or until streets are asphalted and curbed, all catchbasins and manholes will be equipped with geotextile filter socks. These will stay in place and be maintained during construction and build until it is appropriate to remove them.

6 CONCLUSIONS & RECOMMENDATIONS

6.1 Conclusions

This report and the accompanying working drawings clearly indicate that the proposed development meets the requirements of the stakeholder regulators, including the City of Ottawa. The proposed development is also in general conformance with the recommendations made by the Pre-consultation Meeting Notes.

There is a reliable water supply available adjacent to the proposed development; a wastewater outlet is available adjacent to the site and local storm sewers have been installed adjacent to the site.

6.2 Recommendations

It is recommended that the regulators review this submission with an aim of providing the requisite approvals to permit the owners to proceed to the construction stage of the subject site.

Report prepared by:

ARCADIS

Samantha E. Labadie, P. Eng
Civil Engineer

Matt Anderson Petitpas
Engineering Technologist

Appendix A

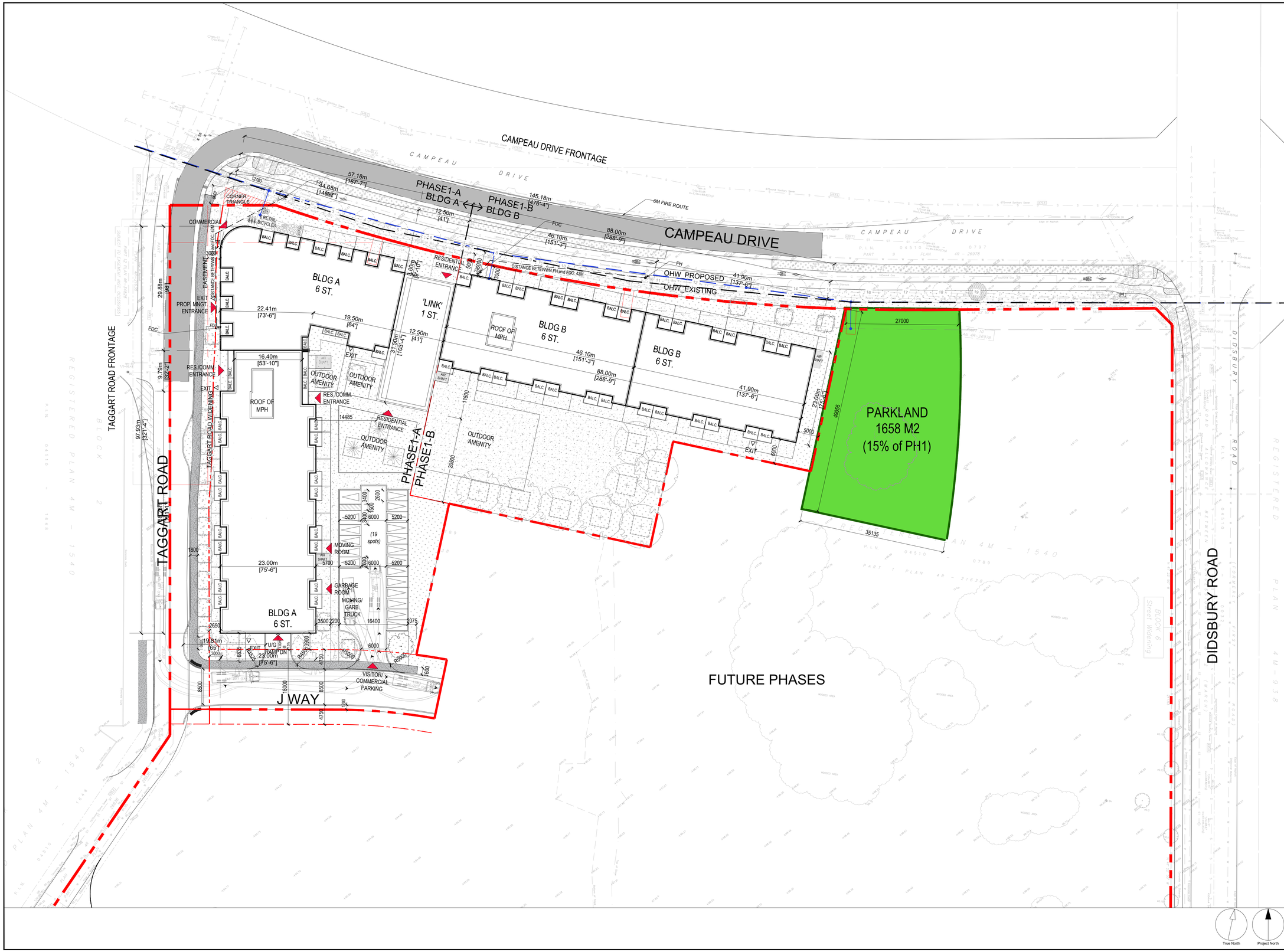

CLIENT

8201 Campeau Drive Inc.

COPYRIGHT

This drawing has been prepared solely for the intended use, thus any reproduction or distribution for any purpose other than authorized by Arcadis is forbidden. Written dimensions shall have precedence over scaled dimensions. Contractors shall verify and be responsible for all dimensions and conditions on the job, and Arcadis shall be informed of any variations from the dimensions and conditions shown on the drawing. Shop drawings shall be submitted to Arcadis for general conformance before proceeding with fabrication.

Arcadis Professional Services (Canada) Inc.

ISSUES

No.	DESCRIPTION	DATE
01	ISSUED FOR SPC	2025-07-18
02	ISSUED FOR SPC RESUB.	2025-10-03

KEY PLAN

CONSULTANTS

Architect:
Arcadis
55 St. Clair Ave. West
Toronto, ON M4V 2Y7
(416) 596-1930

Landscape Architecture
James B. Lennox & Associates Inc.
3332 Carling Avenue
Ottawa, ON K2H 5A8
(613) 722-0168

Civil Engineering:
Arcadis
Suite 500, 333 Preston Street
Ottawa, ON K1S 5N4
(613) 721-0555

Noise Consultant
Paterson Group Inc.
154 Colonnade Road South
Ottawa, ON K2E 7J5
(613) 226-7381

Planning:
Fotenn Planning + Design
420 O'Connor Street
Ottawa, ON K2P 1W4
(613) 730-5709

Environmental Engineer
EXP Services Inc.
100-2650 Queensview Drive
Ottawa, Ontario K2B 8H6
(613) 688-1899

Geotechnical Engineering:
Paterson Group Inc.
154 Colonnade Road South
Ottawa, ON K2E 7J5
(613) 226-7381

Transportation Engineering
CGH Transportation
6 Plaza Court
Ottawa, ON K2H 7W1
(613) 410-8243

SEAL

ARCADIS

55 St. Clair Avenue West, Toronto,
ON M4V 2Y7, CANADA tel 416 596 1930

PROJECT

8201 Campeau Drive

PROJECT NO:	30259723
DRAWN BY:	CHECKED BY:
PROJECT MGR:	APPROVED BY:
SHEET TITLE: PHASE 1 SITE PLAN	SCALE: 1:400
	DATE
SHEET NUMBER: A003	ISSUE

SCALE CHECK 1 in 10mm

File No.: PC2025-0048

March 21, 2025

Scott Alain
Fotenn Planning + Design
Via email: alain@fotenn.com

Subject: Pre-Consultation: Meeting Feedback
Proposed Application – 8201 Campeau Drive

Please find below information regarding next steps as well as consolidated comments from the above-noted pre-consultation meeting held on March 11, 2025.

Pre-Consultation Preliminary Assessment

1 ☐	**2** ☐	**3** ☒	**4** ☐	**5** ☐

One (1) indicates that considerable major revisions are required while five (5) suggests that the proposal appears to meet the City's key land use policies and guidelines. This assessment is purely advisory and does not consider technical aspects of the proposal or in any way guarantee application approval.

Next Steps

1. A review of the proposal and materials submitted for the above-noted pre-consultation has been undertaken. Should you choose, proceed to complete a Phase 2 / Phase 3 Pre-consultation Application Form. Please submit this information together with the necessary studies and/or plans to planningcirculations@ottawa.ca.

2. In your subsequent pre-consultation submission, please ensure that all comments or issues detailed herein are addressed. A detailed cover letter stating how each issue has been addressed is requested with the submission materials. Please coordinate the numbering of your responses within the cover letter with the comment number(s) herein.

3. Please note, if your development proposal changes significantly in scope, design, or density it is recommended that a subsequent pre-consultation application be submitted.

4. If the Urban Design Review Panel (UDRP) Report is listed as a required submission material in the Study and Plan Identification List, the applicant must visit the UDRP prior to formally submitting the planning application. The UDRP report is required for the application to be considered complete.

Supporting Information and Material Requirements

1. The attached **Study and Plan Identification List** outlines the information and material that has been identified, during this phase of pre-consultation, as either required (R) or advised (A) as part of a future complete application submission.

    a. The required plans and studies must meet the City's Terms of Reference (ToR) and/or Guidelines, as available on Ottawa.ca. These ToR and Guidelines outline the specific requirements that must be met for each plan or study to be deemed adequate.

Consultation with Technical Agencies

1. You are encouraged to consult with technical agencies early in the development process and throughout the development of your project concept. A list of technical agencies and their contact information is enclosed.

Planning

Comments:

2. **OP:** Schedule B5 -Suburban West Transect, Neighbourhood (with Overlay),

3. **Zoning:** MC11[74] H(34)

4. **Future Zoning:** Present draft Zoning By-law has it listed as a Hub(H)[74] H(34) and Minor Corridor(CM) [74] H(34).

5. **TOD:** Didsbury LRT Station is part of the Ultimate Transit Network (Sch.C2); However, it is not a funded station.

   From a policy perspective, it is in proximity to a future LRT Station (which is still supportive of a mix of uses in higher densities); BUT, the future context is not intended as a Hub function.

6. Section 37 requirements / Community Benefits Charge

    a. The former Section 37 regime has been replaced with a "Community Benefits Charge", By-law No. 2022-307, of 4% of the land value. This charge will be required for ALL buildings that are 5 or more storeys and 10 or more units and will be required at the time of building permit unless the development is subject to an existing registered Section 37 agreement. Questions regarding this change can be directed to Ranbir.Singh@ottawa.ca.

7. Please observe the Urban Desing Guidelines for High-rise Buildings in any future Site Plan Application in determining appropriate lotting.

8. Landscape requirements

    a. A landscape plan is required prior to early servicing.

9. The comments provided in the 2023 preconsult are largely still applicable.

    a. Size of the blocks are still of concern for us, for scale the building façade along Campeau is a similar length as the strip mall. I think that the development could benefit from further refining both the block and building sizes.

10. Will need confirmation of deeded access to this private ROW on the west.

11. When assessing this application, I'll push for them to treat this as a corner lot line

12. E-W private ROW will need to be included in the Phase 1 lands and detailed further.

13. We would like to get further detail on what is targeted for the interior courtyard. Consider:

    - The shadow impacts on this space – there may be many reasons to have Building A split up into two buildings.
    - The 'back of house' condition that may be present in areas adjacent to amenity areas.
    - The issues that the surface parking lot may have for perspective commercial tenants which will have difficulty managing two entrances.

<u>Urban Design</u>

Comments:

- Urban Design Brief required – please refer to the attached Terms of Reference.
- Staff appreciate that the Applicant is hoping to move ahead with the Phase 1 development leveraging as-of-right zoning permissions, however, it would be best if the plans were viewed in the context of a larger master plan.
- As supported by Parks, the park block should be larger and more regularly shaped with adequate frontage on public roads. Microclimate conditions (future) should inform the position of the park.
- Public roads a critical part of the development of this very large site. Staff appreciate the ongoing discussions being had with the adjacent neighbour as well as the addition of a public road link through the center of the property.

- Staff appreciate that the proposed 6 storey form will relate back to the scale of development anticipated along the Minor Corridor.

- Staff also appreciate that the Applicant is thinking about ground floor animation in the form of retail along Campeau and grade-related units and amenity along the remainder of the streets.

- Ground floor units facing out onto a private walkway and landscaping should also be provided along-side the proposed park for further animation.

- Staff also appreciate that the Applicant is looking at a robust amenity strategy to support the future residents of the Phase 1 development.

- Staff feel that that the development block as proposed cuts off the balance of the future development from Campeau and that the development would benefit from a mid-block connection into the site.

- Built form should be reorganized to support a semi-public connection to Campeau.

- Short term parking areas should be screened from the public realm.

- If connection between the buildings is important a second or third level bridge connection can be supported.

- Staff look forward to reviewing future public realm treatments for Campeau as well as new public and private roads anticipated through the property.

- High level concept (draft) included below to stimulate workshop discussions which we anticipate will occur in the coming weeks:

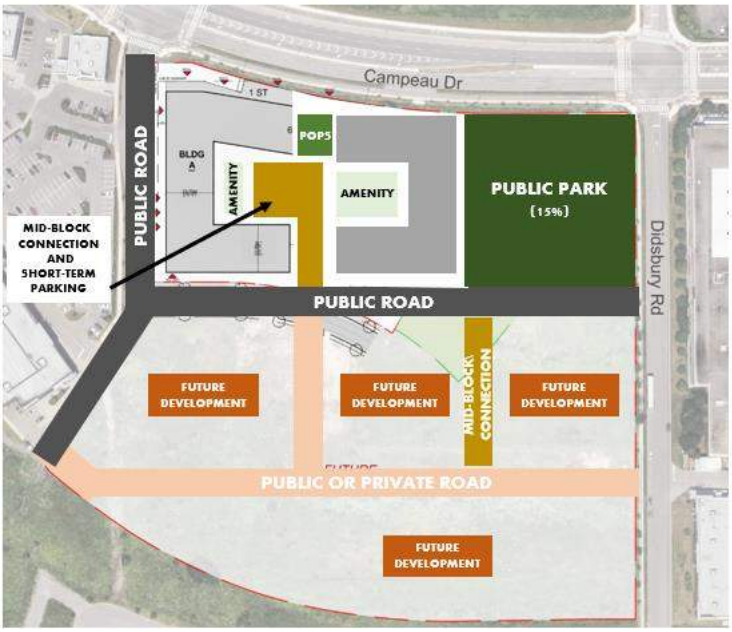

14. Feel free to contact Nader Kadri, Urban Designer, for follow-up questions.

<u>Engineering</u>

15. Existing public infrastructure:

    a. Campeau

        i. 600mm backbone watermain (new connections not permitted)

        ii. 675mm concrete sanitary

        iii. 525mm concrete storm

    b. Didsbury (30 cm reserve must be lifted for frontage on Didsbury)

        i. 203mm PVC watermain

        ii. 450mm concrete sanitary

        iii. 300mm pvc storm

    c. Private service stubs may be available on servicing block between 8201 Campeau Drive and 8231 Campeau Drive. Legal access to the easement will be required.

16. The preferred connection location for new service laterals will be via the private roadway access shared between 8231 Campeau Drive and 8201 Campeau Drive. Legal access will be required. Alternatively, if a private or public roadway is proposed to transect the site, servicing via the new roadway alignment would be a preferred option.

17. Water

    a. Boundary conditions: Civil consultant must request boundary conditions from the City's assigned Project Manager prior to first submission.

        i. Water boundary condition requests must include the location of the service(s) and the expected loads required by the proposed developments. Please provide all the following information:

            - Location of service(s)
            - Type of development and the amount of fire flow required (as per FUS, 2020)
            - Average daily demand: ___ L/s
            - Maximum daily demand: ___ L/s
            - Maximum hourly daily demand: ___ L/s

        ii. Fire protection (Fire demand, Hydrant Locations)

    b. A District Metering Area Chamber (DMA) is required for services 150mm or greater in diameter.

    c. Service areas with a basic demand greater than 50 m3/day shall be connected with a minimum of two water services, separated by an isolation valve, to avoid the creation of a vulnerable service area. If a private watermain network is proposed within the subject site, the private watermain will require two connections to the public watermain network, separated by an isolation valve. Watermain connections to the 600mm backbone watermain on Campeau Drive will not be permitted.

    d. Existing water services that are not to be used must be decommissioned as per City Standards.

18. The sanitary sewer release rate, for the subject site, is to be in accordance with the following reports:

    a. Kanata West Master Servicing Study (KWMSS), Stantec Consulting Ltd and IBI. Group, June 2006

    b. Taggart – Loblaws Subdivision, Kanata West, Servicing Report, Stantec Consulting Ltd., June 2013

Stormwater Management

19. The storm sewer release rate and stormwater management criteria, for the subject site, is to be in accordance with the following reports:

    a. Kanata West Master Servicing Study (KWMSS), Stantec Consulting Ltd and IBI. Group, June 2006

    b. Taggart – Loblaws Subdivision, Kanata West, Servicing Report, Stantec Consulting Ltd., June 2013

    c. Taggart-Loblaws Subdivision Stormwater Management Facility Design Brief, Stantec Consulting Ltd, June 2013

20. Quality Control: SWMP 3 is designed to treat 80% TSS from the minor system. Additional stormwater quality treatment is not required.

21. Water Balance: The subject site must provide infiltration measures in order to meet the 70mm/yr infiltration rate indicated in the KWMSS, and further the Taggart – Loblaws Subdivision Stormwater Management Facility Design Brief (June 2013). Detailed calculations will be required to demonstrate that this requirement can be achieved.

22. When both underground and above ground storage is utilized, the release rate from the system will significantly differ than when solely one level storage is being used (i.e. greater range of head vs smaller change of head during storm event). If both levels of storage are to be accounted for then there are two options for SWM calculations: 1) use a dynamic computer model or 2) use an assumed average flow rate of half (50%) of the controlled peak flow rate of the area(s) utilizing two levels of storage.

Geotechnical

23. The site is subject to water balance requirements through infiltration. All soil assumptions made in the servicing report should be supported by the geotechnical report.

24. If a road cut is proposed on Campeau, the geotechnical report should provide construction recommendations for work around the critical infrastructure within the ROW.

Environmental Compliance Application

25. The development will be exempt from an ECA assuming it continues to meet the O.Reg 525/98 exemption criteria.

    O.Reg 525/98 ECA exemption criteria:

(a) is designed to service one lot or parcel of land;

(b) discharges into a storm sewer that is not a combined sewer;

(c) does not service industrial land or a structure located on industrial land; and

(d) is not located on industrial land.

Feel free to contact Julie Candow, Project Manager, for follow-up questions.

Noise

Comments:

26. Noise Impact Studies required for the following:

    a. Road, as the subject development is located within 100m proximity of Campeau Road, and within 500m of Highway 417.

    b. Rail, site is within 100m of the future LRT ROW.

    c. Stationary, due to the proximity to neighboring exposed mechanical equipment and/or if there will be any exposed mechanical equipment due to the proximity to neighboring noise sensitive land uses.

    d. Vibration Assessment is required as the subject development is located within 75m from the LRT ROW.

    e. Feel free to contact Rochelle Fortier-Lesage, Transportation Project Manager, for follow-up questions.

Transportation

Comments:

27. Follow Transportation Impact Assessment Guidelines:

    a. A Transportation Impact Assessment is required. Please submit the Scoping report to rochelle.fortier@ottawa.ca at your earliest convenience. The applicant is responsible to submit the Scoping Report and must allow for a 14 day circulation period and sign-off prior to proceeding to the Strategy Report.

    b. The Strategy Report must be submitted for review at the latest with the formal submission package. The applicant is still encouraged to submit the Strategy Report to the TMP before submission and allow for a 14 day circulation period.

c. If an RMA is required to support the proposed development, the functional plan and/or RMA plans must be submitted with the formal submission to deem complete. Request base mapping asap if RMA is required. Contact Engineering Services.

28. Ensure that the development proposal complies with the Right-of-Way protection requirements - See Schedule C16 of the Official Plan.

    a. Corner triangles on the final plan will be required (measure on the property line/ROW protected line; no structure above or below this triangle). The City requires the following corner triangles at these locations:

        i. Arterial/Local, or Collector/Local: a 3 metre x 9 metre triangle, with the longer portion on the higher road segment

        ii. Local/Local, or Public Lane/Local: a 3 metre x 3 metre triangle

    b. ROW must be unincumbered and conveyed at no cost to the City. Note that conveyance of the ROW will be required prior to registration of the SP agreement. Additional information on the conveyance process can be provided upon request.

    c. Any requests for exceptions to ROW protection requirements must be discussed with Transportation Planning and concurrence provided by Transportation Planning management.

29. Site is partially within MTO permit control area which requires an MTO Building and Land Use Permit. Coordination with MTO staff is required to determine their TIS requirements.

30. Corner clearances should follow minimum distances set out within TAC Figure 8.8.2.

31. Please note that there is a new transit pad along the Campeau Drive frontage.

32. TMP includes:

    a. LRT from Moodie Drive to Kanata (Ultimate Network Concept), with new station at Didsbury

    b. The City is proceeding with the extension of Earl Grey Drive west to Didsbury Road, with the construction of a segment of road approximately 140 metres in length. The extension will pass under Terry Fox Drive and requires the construction of a new bridge structure as well as an upgrade to the Terry Fox Drive and Didsbury Road intersection in order to meet the requirements of the City's protected intersection guidelines.

33. AODA legislation applies for all areas accessible to the public. Please consider using the City's Accessibility Design Standards, which provide a summary of AODA requirements.

34. On site plan:

    a. Ensure site accesses meet the City's Private Approach Bylaw and all driveways/aisles meet the requirements outlined in Section 107 of the Zoning By-law.

    b. Show all details of the roads abutting the site; include such items as pavement markings, accesses and/or sidewalks.

    c. Turning movement diagrams required for all accesses showing the largest vehicle to access/egress the site.

    d. Turning movement diagrams required for internal movements (loading areas, garbage).

    e. Show all curb radii measurements; ensure that all curb radii are reduced as much as possible and fall within TAC guidelines (Figure 8.5.1).

    f. Show dimensions for site elements (i.e. lane/aisle widths, access width and throat length, parking stalls, sidewalks, pedestrian pathways, etc.)

    g. Sidewalks are to be continuous across accesses as per City Specification 7.1.

    h. Show proposed and required parking rates.

    i. Show slope of garage ramps on site plan. Note that underground ramps should be limited to a 12% grade and must contain a subsurface melting device when exceeding 6%. Ramp grades greater than 15% can be psychological barriers to some drivers.

    j. Parking stalls at the end of dead-end parking aisles require adequate turning around space

    k. Grey out any area that will not be impacted by this application.

Feel free to contact Rochelle Fortier-Lesage, Transportation Project Manager, for follow-up questions.

Environment

Comments:

35. There are no triggers for an Environmental Impact Study.

36. Bird-Safe Design Guidelines - Please review and incorporate bird safe design elements. Some of the risk factors include glass and related design traps such as corner glass and fly-through conditions, ventilation grates and open pipes, landscaping, light pollution. More guidance and solutions are available in the guidelines which can be found here: https://documents.ottawa.ca/sites/documents/files/birdsafedesign_guidelines_en.pdf

37. Please consider if there are features that can be added reduce the urban heat island effect (see OP 10.3.3). For example, this impact can be reduced by adding large canopy trees, green roofs or vegetation walls, or incorporating building with low heat absorbing materials.

38.

Feel free to contact Matthew Hayley, Environmental Planner, for follow-up questions.

Forestry

Comments:

39. The park should be situated to include retention of the existing conifer stand, which is a remnant from the former farm and laneway that were on this parcel.

40. The design including the setbacks from underground parking should allow for retention of as many of the newly planted trees along Campeau and Didsbury as possible, and for replacement of any which must be removed.

41. A TCR and Landscape Plan are required including all elements within the associated guidelines and Terms of Reference.

42. The LP must include trees on all frontages and for screening between the park and building B, toward the Official Plan goal of 40% canopy cover.

Feel free to contact Nancy Young, Forester, for follow-up questions.

Parkland

43. Parkland dedication is required in accordance with the Parkland Dedication By-law (2022-280) and Planning Act. The applicable parkland dedication rate for residential development is 1 ha per 600 units, to a maximum of 15% of the site area, per application. The parcel size is 6.16 ha based on GeoOttawa. If looked at comprehensively, the maximum parkland dedication that can be taken for the residential use of the site is 0.924 ha.

44. Pervious conversations with the applicant included discussion of a parkland dedication based on a Transit Oriented Development Zone. Staff advise that the site does not currently benefit from such a TOD zone, and so policies in Section 5 of the Parkland Dedication By-law are not applicable at this time.

45. Based on the TIA submitted with the pre-con application package, 350 units are considered for phase 1, and so the site plan application generates a parkland dedication requirement of approximately 0.583 ha. As more details of the mixed-use nature of the development are provided, this calculation may be slightly refined.

46. Parks and Facilities Planning encourages that the applicant provide a park block through the phase 1 site plan application that will serve the entire site, i.e. the 0.924 ha park block size. This should provide greater clarity in planning in planning the remainder of the community.

47. A park block 0.924 ha in size is classified as a "parkette" within the hierarchy of parks in the City of Ottawa. Parkettes are small parks, rectangular in shape, that are located within walking distance of residents, they provide a central greenspace and social gathering space. Parkettes are to be located on local streets with a minimum of 50% public road frontage. Staff do not think it is appropriate to locate a parkette abutting Campeau Drive. PFP suggest that the parkette would be better located with greater frontage abutting Didsbury Road and the new public road to the south. PFP supports the park location shown in the sketch provided within the urban design comments.

48. The ultimate concept of the full site proposes residential towers to the south of park block resulting in possible concerns for wind and shade. Ensuring the park has 50% or more road frontage on local roads may help mitigate the effects on park users of feeling squeezed between towers.

49. Prior to site plan approval, the Owner is required to submit a Facility Fit Plan for the 0.583 ha park block, and/or the 0.924 ha park block in accordance with the submission requirements for a Facility Fit Plan (PARK DEVELOPMENT MANUAL page 60). The Facility Fit plan is a planning exercise to ensure the size and configuration of the park block is acceptable. It identifies any existing vegetation or special feature in the park which may be preserved.

50. Forestry has noted that there is a line of mature conifer trees located near to the proposed park site perpendicular to Didsbury. The ideal park location will allow for the retention of those trees and inclusion of them in the Facility Fit Plan.

51. As a starting point, I suggest that the appropriate amenities for include in the Fit Plan for this parkette are a junior and senior play structures, swings, splash pad, shaded seating and a basketball court, along with open space and plantings. This Fit Plan must include a cost estimate corresponding with the park design

and construction budget. Park amenities and design will be further refined through the park detail design process which includes public consultation.

52. Staff are available to discuss the developer-built park process. The applicant is encouraged to ask if they are unfamiliar or have questions about the process expectations. The applicant should make clear their intentions to provide and/or construct the park block in one or more phases. The city encourages the developer to construct the park block in conjunction with Phase 1 to ensure it is made available to residents at the soonest opportunity.

53. Parks staff will also be looking at details of the façade of Building B or any proposed building abutting the park to ensure it is compatible.

Feel free to contact Anissa.mcalpine@ottawa.ca, Parks Planner, for follow-up questions.

Other

54. The High Performance Development Standard (HPDS) is a collection of voluntary and required standards that raise the performance of new building projects to achieve sustainable and resilient design and will be applicable to Site Plan Control and Plan of Subdivision applications.

    a. The HPDS was passed by Council on April 13, 2022, but is not in effect at this time, as Council has referred the 2023 HPDS Update Report back to staff with the direction to bring forward an updated report to Committee at a later date. The timing of an updated report to Committee is unknown at this time, and updates will be shared when they are available.

    b. Please refer to the HPDS information at ottawa.ca/HPDS for more information.

55. Under the Affordable Housing Community Improvement Plan, a Tax Increment Equivalent Grant (TIEG) program was created to incentivize the development of affordable rental units. It provides a yearly fixed grant for 20 years. The grant helps offset the revenue loss housing providers experience when incorporating affordable units in their developments.

    To be eligible for the TIEG program you must meet the following criteria:

    a. the greater of five units OR 15 per cent of the total number of units within the development must be made affordable

    b. provide a minimum of 15 per cent of each unit type in the development as affordable

    c. enter into an agreement with the city to ensure the units maintain affordable for a minimum period of 20 years at or below the city-wide

average market rent for the entire housing stock based on building form and unit type, as defined by the Canada Mortgage and Housing Corporation

d. must apply after a formal Site Plan Control submission, or Building Permit submission for projects not requiring Site Plan Control, and prior to Occupancy Permit issuance

a. Please refer to the TIEG information *at Affordable housing community improvement plan / Plan d'améliorations communautaires pour le logement abordable for more details or contact the TIEG coordinator via email at affordablehousingcip@ottawa.ca.*

Submission Requirements and Fees

1. Complex Site Plan Control & Plan of Subdivision Applciations
    a. Additional information regarding fees related to planning applications can be found here.
2. The attached **Study and Plan Identification List** outlines the information and material that has been identified as either required (R) or advised (A) as part of a future complete application submission.
    a. The required plans and studies must meet the City's Terms of Reference (ToR) and/or Guidelines, as available on Ottawa.ca. These ToR and Guidelines outline the specific requirements that must be met for each plan or study to be deemed adequate.
3. All of the above comments or issues should be addressed to ensure the effectiveness of the application submission review.

Should there be any questions, please do not hesitate to contact myself or the contact identified for the above areas / disciplines.

Yours Truly,
John Bernier, MCIP RPP

APPLICANT'S STUDY AND PLAN IDENTIFICATION LIST

Proposed Site Plan and Subdivision Applications – 8201 Campeau Drive – PC2025-0048

Legend: **R** = Required, the study or plan is required with application submission
A = Advised, the study or plan is advised to evaluate the application or satisfy a condition of approval/draft approval
1 - OPA, **2** - ZBA, **3** - Plan of Subdivision, **4** - Plan of Condominium, **5** - SPC

Core studies required for certain applications all the time (Remaining studies are site specific)

For information and guidance on preparing required studies and plans refer here:

ENGINEERING									
R	**A**	**Study/ Plan Name**	**Description**	**When Required**					**Applicable Study Components & Other Comments**
				1	**2**	**3**	**4**	**5**	
☒	☐	1. Environmental Site Assessment (Phase 1 & Phase 2)	Ensures development only takes place on sites where the environmental conditions are suitable for the proposed use	☒	☒	☒	☒	☒	Record of Site Condition Yes ☐ No ☐
				Study Trigger Details: All cases					
☒	☐	2. Geotechnical Study	Geotechnical design requirements for the subsurface conditions	☒	☒	☒	☒	☒	
				Study Trigger Details: All cases					
☒	☐	3. Grading and Drainage Plan	Grading relationships between connecting (or abutting) properties and surface runoff control	☐	☐	☒	☐	☒	
				Study Trigger Details: All cases					
☐	☐	4. Hydrogeological and Terrain Analysis	A scientific study or evaluation that includes a description of the ground and surface hydrology, geology, terrain, affected landform and its susceptibility	☐	☐	☒	☒	☒	Reasonable Use Study Yes ☐ No ☐ Groundwater Impact Study Yes ☐ No ☐
				Study Trigger Details: When developing on private services or when urban development is in close proximity to existing private serviced development					
☒	☐	5. Noise Control Study	Potential impacts of noise on a development	☒	☒	☒	☒	☒	Vibration Study Yes ☒ No ☐
				Study Trigger Details: See Terms of Reference for full details.					

☒	☐	6. Rail Proximity Study	Development on land adjacent to all Protected Transportation Corridors and facilities shown on Schedule C2 of the Official Plan, to follow rail safety and risk mitigation best practices	☐	☒	☒	☒	☒	Rail Safety Report Yes ☐ No ☐ O-Train Network Proximity Study Yes ☒ No ☐
				Study Trigger Details: Within the Development Zone of Influence for existing and future rapid transit stations and corridors, as shown on Annex 2 of the OP OR on land adjacent to all Protected Transportation Corridors and facilities shown on Schedule C2 of the Official Plan					
☒	☐	7. Site Servicing Study	Provides servicing details based on proposed scale of development with an engineering overview taking into consideration surrounding developments and connections.	☐	☒	☒	☒	☒	Fluvial Geomorphological Report Yes ☐ No ☐ Assessment of Adequacy of Public Services Yes ☐ No ☐ Servicing Options Report Yes ☐ No ☐ Erosion and Sediment Control Plan / Brief Yes ☒ No ☐ Hydraulic Water Main Analysis Yes ☒ No ☐ Stormwater Management Report and Detailed Design Brief Yes ☒ No ☐
				Study Trigger Details: All cases					
☐	☐	8. Slope Stability Study	Assessment of slope stability and measures to provide safe set-back.	☐	☒	☒	☒	☒	Retrogressive Landslide Analysis Yes ☐ No ☐
				Study Trigger Details: Where the potential for Hazard Lands exists on a site.					
☒	☐	9. Transportation Impact Assessment	Identify on and off-site measures to align a development with City transportation objectives.	☐	☒	☒	☒	☒	Roadway Modification Functional Design Yes ☐ No ☐
				Study Trigger Details: If the development generates 60 person-trips or more; or if the development is located in a Location Trigger; or if the development has a Safety Trigger.					

☐	☐	10. Water Budget Assessment	Identify impact of land use changes on the hydrologic cycle and post-development mitigation targets.	☐	☒	☒	☒	☒	
				Study Trigger Details: May be required for site plan control applications for sites with private servicing and / or proximity to hydrogeologically-sensitive areas. Draft plans of subdivision are required to integrate water budget assessments into supporting stormwater management plans and analysis for the study area.					
☐	☐	11. Wellhead Protection Study	Delineate a Wellhead Protection Area (WHPA) and characterize vulnerability for new communal residential drinking water well systems, in accordance with Technical Rules under *Clean Water Act.*	☐	☒	☒	☒	☒	
				Study Trigger Details: Required for all new communal residential drinking water well systems; including new municipal wells, new private communal wells (small water works) that require a Municipal Responsibility Agreement (MRA), expansions or increased water takings from an existing municipal well or existing private communal well and new private communal wells.					

PLANNING									
R	A	Study/Plan Name	Description	When Required					Applicable Study Components & Other Comments
				1	2	3	4	5	
☐	☐	12. Agrology and Soil Capability Study	Confirm or recommend alterations to mapping of agricultural lands in the City.	☒	☐	☐	☐	☐	
				Study Trigger Details: For the expansion of a settlement area or identification of a new settlement area through a comprehensive review; or where it is demonstrated that the land does not meet the requirements for an Agricultural Resource Area.					
☐	☐	13. Archaeological Assessment	Discover any archaeological resources on site, evaluate cultural heritage value and conservation strategies	☒	☒	☒	☒	☒	
				Study Trigger Details: When the land has either: a known archaeological site; or the potential to have archaeological sites; or where the City's Archaeological Resource Potential Mapping Study indicates archaeological potential, outside of the historic core; or upon discovery of any archaeological resource during construction in the City's historic core area.					
☒	☐	14. Building Elevations	Visual of proposed development to understand facing of building including direction of sunlight, height, doors, and windows.	☒	☒	☐	☐	☒	
				Study Trigger Details: Site Plan: for residential buildings with 25 or more residential units; or for residential buildings with less than 25 residential units, if the units are within the Urban area or the High-performance Development Standard threshold in the rural area. Official Plan or Zoning By-law: if staff deem it necessary to determine compliance with OP policies, the Zoning By-law or City of Ottawa Urban Design Guidelines.					

☐	☐	15. Heritage Impact Assessment	Determine impacts of proposed development on cultural heritage resources.	☒	☒	☒	☒	☒	Conservation Plan Yes ☐ No ☐
				Study Trigger Details: Where development or an application under the Ontario Heritage Act is proposed on, adjacent to, across the street from or within 30 metres of a protected heritage property; or for any development adjacent to the Rideau Canal UNESCO World Heritage Site and its landscaped buffer.					
☐	☐	16. Heritage Act Acknowledgement Report	A submission requirement to demonstrate that the *Ontario Heritage Act* requirements have been satisfied, to ensure that multiple applications are considered currently.	☐	☒	☒	☒	☒	Heritage Permit Application Yes ☐ No ☐ Notice of Intent to Demolish Yes ☐ No ☐
				Study Trigger Details: Where the subject property is listed on the Heritage Register and the applicant must submit a Heritage Permit Application (designated heritage property listed on the Heritage Register) or provide notice of intent to demolish or remove a building (non-designated property listed on the Heritage Register).					
☐	☐	17. Impact Assessment Study – Mineral Aggregate	Mineral aggregate extraction activities; and to protect known high quality mineral aggregate resources from development and activities that would preclude or hinder their existence (ability to be extracted) or expansion.	☒	☒	☒	☒	☒	
				Study Trigger Details: New Development within 500 metres of lands within the Bedrock Overlay , or within 300 metres of lands within the Sand and Gravel Resource Area Overlay.					
☐	☐	18. Impact Assessment Study – Mining Hazards	To identify or confirm known mineral deposits or petroleum resources and significant areas of mineral potential. To protect mineral and petroleum resources from development and activities which would preclude or hinder the establishment of new operations or access to the resources.	☒	☒	☒	☒	☒	
				Study Trigger Details: For all applications in proximity to mining operations.					

☐	☐	19. Impact Assessment Study – Waste Disposal Sites / Former Landfill Sites	To identify or confirm known proximity of existing or former waste disposal sites. To ensure issues of public health, public safety and environmental impact are addressed.	☒	☒	☒	☒	☒	
				Study Trigger Details: For the establishment of any new Solid Waste Disposal Site or for a footprint expansion of an operating Solid Waste Disposal Site; or development within three kilometers of an operating or non-operating Waste Disposal Site.					
☒	☐	20. Landscape Plan	A plan to demonstrate how the canopy cover, urban design, health, and climate change objectives of Official Plan will be met through tree planting and other site design elements.	☒	☒	☒	☒	☒	
				Study Trigger Details: Site Plan, Plan of Subdivision, and Plan of Condominium: always required, except where it is demonstrated that the landscape component of a project is not relevant to the review of the application. A high-level conceptual Landscape Plan may be required to support Zoning By-law and Official Plan Amendment applications.					
☐	☐	21. Mature Neighbourhood Streetscape Character Analysis	In the Mature Neighbourhoods a Streetscape Character Analysis is required to determine the applicable zoning requirements.	☐	☒	☐	☐	☐	
				Study Trigger Details: Zoning By-law amendment application in areas covered by the Mature Neighbourhoods zoning overlay for applications of residential development of four storeys or less located in a R1, R2, R3, or R4 zone.					
☐	☐	22. Minimum Distance Separation	Provincial land use planning tool that determines setback distances between livestock barns, manure storages or anaerobic digesters and surrounding land uses, with the objective of minimizing land use conflicts and nuisance complaints related to odour.	☒	☒	☒	☒	☒	
				Study Trigger Details: Applications in the Rural Area, outside of a village.					

☐	☐	23. Parking Plan	A tool to assess the sufficiency of on-street parking in plans of subdivision.	☐	☐	☒	☒	☐	
				Study Trigger Details: For new or revised plans of subdivision with public streets.					
☒	☐	24. Plan of Survey	A Plan of Survey depicts legal boundaries and is a specialized map of a parcel of land and it delineates boundary locations, building locations, physical features and other items of spatial importance.	☒	☒	☒	☒	☒	
				Study Trigger Details: Required for all *Planning Act* applications.					
☒	☐	25. Plan of Subdivision	Proposed subdivision layout to be used for application approval	☐	☒	☒	☐	☐	
				Study Trigger Details: Always required with the submission of plan of subdivision application. Only required with a Zoning By-law Amendment application, where such ZBLA is in response to enable a subdivision.					
☐	☐	26. Plan of Condominium	Proposed condominium layout to be used for application approval	☐	☐	☐	☒	☐	
				Study Trigger Details: With the submission of plan of condominium application.					
☒	☐	27. Planning Rationale	Provides the planning justification in support of the *Planning Act* application and to assist staff and the public in the review of the proposal.	☒	☒	☒	☐	☐	Integrated Environmental Review Summary Yes ☐ No ☐
				Study Trigger Details: For all Official Plan amendment, Zoning By-law amendment, or plan of subdivision applications.					
☒	☐	28. Preliminary Construction Management Plan	A checklist that shows a development proposal's anticipated impacts to all modes of transportation and all elements in the right of way during construction.	☐	☐	☒	☐	☒	
				Study Trigger Details: For all Site Plan and plan of subdivision applications.					

☒	☐	29. Public Consultation Strategy	Proposal to reach and collect public input as part of development application.	☒	☒	☒	☒	☒	
				Study Trigger Details: Official Plan Amendment, Zoning By-law Amendment and Subdivision: Always required. Condominium: Vacant Land only Site Plan: At the discretion of the City's file lead in consultation with the Business and Technical Support Services Manager.					
☐	☐	30. Shadow Analysis	A visual model of how the proposed development will cast its shadow.	☐	☒	☐	☐	☐	
				Study Trigger Details: When there is an increase in height or massing proposed for a residential, commercial or office use. Two triggers: 1. Inside the Greenbelt: proposed development is over 5 storeys in height (≤15 meters). If a development proposal is 5 storeys or less, but is proposing an increase in height and/or massing and is in close proximity to a shadow sensitive area, a shadow analysis may be requested. 2. Outside the Greenbelt: proposed development is over 3 storeys in height (≤9 meters) and is in close proximity to a shadow sensitive area. Where a proposed development is not in close proximity to a shadow sensitive area (e.g. industrial development) the trigger for a shadow analysis is over 5 storeys in height (≤15 meters).					
☒	☐	31. Site Plan	A Site Plan is a visual drawing that illustrates the proposed development of a site in two dimensions.	☒	☒	☒	☒	☒	Site Plan Yes ☐ No ☐ Concept Plan Yes ☐ No ☐
				Study Trigger Details: Site Plan: All Other applications: where a layout of the					

				public realm, building massing, heights, densities or massing of the proposal provides changes to the planned context; sites proposing multiple land uses; sites with multiple landowners; sites with two or more buildings, on-site park dedication, and/or a new public or private street(s); sites with proposed changes to connectivity (such as active transportation networks, vehicular circulation or access to transit); sites where the development potential on adjacent properties may be impacted by or could be integrated into the proposed site.					Facility Fit Plan Yes ☐ No ☐
☒	☐	32. Urban Design Brief	Illustrate how a development proposal represents high-quality and context sensitive design that implements policies of the Official Plan, relevant secondary plans, and Council approved plans and guidelines.	☒	☒	☒	☐	☒	
				<u>Study Trigger Details</u>: For all Official Plan amendment, Zoning By-law amendment, and plan of subdivision applications. For SPC applications: proposals for residential buildings with 25 or more residential units, or for proposals for residential buildings with less than 25 residential units, if the units are within the Urban area or the High-performance Development Standard threshold in the rural area where OP Policy 11.3 (3) is relevant; for non-residential and mixed-use proposals.					
☐	☐	33. Urban Design Review Panel Report	Demonstrates that a development proposal has attended an Urban Design Review Panel formal review meeting, received, and responded to the associated recommendations, if applicable	☒	☒	☒	☒	☒	
				<u>Study Trigger Details</u>: Required for all planning act applications subject to UDRP review, in accordance with the UDRP Panel Terms of Reference.					
☐	☐	34. Wind Analysis	A visual model and a written evaluation of how a proposed development will impact pedestrian-level wind conditions.	☐	☒	☐	☐	☒	
				<u>Study Trigger Details</u>: Applications seeking an increase in height and/or massing which is either: a tall building(s), 10 storeys or more or a proposed building that is more than twice the height of					

				adjacent existing buildings and is greater than five storeys in height and is adjacent to existing or planned low rise development, open spaces, water bodies and large public amenity areas.					
☐	☐	35. Zoning Confirmation Report	The purpose of the Zoning Confirmation Report (ZCR) is to identify all zoning compliance issues, if any, at the outset of a planning application.	☐	☒	☐	☐	☒	
				Study Trigger Details: Required for all SPC and ZBLA applications.					

ENVIRONMENTAL

R	A	Study / Plan Name	Description	When Required					Applicable Study Components & Other Comments
				1	2	3	4	5	
☐	☐	36. Community Energy Plan	Includes a community energy analysis, alongside mitigation measures, and other associated information. The community energy analysis refers to the overall assessment process to identify on and off-site measures to align the design of the development with City climate objectives.	☐	☐	☐	☐	☐	
				NOT IMPLEMENTED & NOT REQUIRED					
☐	☐	37. Energy Modelling Report	The Energy Modeling Report is a Site Plan Control application submission requirement to show how climate change mitigation, and energy objectives will be met through exterior building design elements.	☐	☐	☐	☐	☐	
				NOT IMPLEMENTED & NOT REQUIRED					
☐	☐	38. Environmental Impact Study	Assessment of environmental impacts of a project and documents the existing natural features, identifies the potential environmental impacts,	☒	☒	☒	☐	☒	Assessment of Landform Features Yes ☐ No ☐ Integrated Environmental Review Yes ☐ No ☐
				Study Trigger Details: Is required when development or site alteration is proposed in or within a					

			recommends ways to avoid and reduce the negative impacts, and proposes ways to enhance natural features and functions.	specified distance of environmentally designated lands, natural heritage features, the City's Natural Heritage System, or hazardous forest types for wildland fire. The EIS Decision Tool (Appendix 2 of the Environmental Impact Study Guidelines) provides a checklist of the natural heritage features and adjacent areas within which an EIS is required to support development applications under the *Planning Act.*	Protocol for Wildlife Protection during Construction Yes ☐ No ☐ Significant Woodlands Guidelines for Identification, Evaluation, and Impact Assessment Yes ☐ No ☐
☐	☐	39. Environmental Management Plan	A comprehensive environmental planning document that identifies, evaluates, and mitigates the potential impacts of proposed development on the natural environment and its ecological functions at local planning stage.	☒ ☐ ☐ ☐ ☐ <u>Study Trigger Details</u>: Official Plan amendments for local plans (area-specific policy or secondary plan, where: there is significant change in the conditions upon which the original study was based; there are proposed changes to planned infrastructure needed to service a subdivision that would have a significant impact on the infrastructure needs of another subdivision within the EMP study area, or the applicable Class Environmental Assessment approval has expired.	
☐	☐	40. High-performance Development Standard	A collection of voluntary and required standards that raise performance of new building projects to achieve sustainable and resilient design	☐ ☐ ☐ ☐ ☐ NOT IMPLEMENTED & NOT REQUIRED	
☒	☐	41. Tree Conservation Report	Demonstrates how tree cover will be retained and protected on the site, including mature trees, stands of trees, and hedgerows.	☐ ☐ ☒ ☒ ☒ <u>Study Trigger Details</u>: Where there is a tree of 10 centimeters in diameter or greater on the site and/or if there is a tree on an adjacent site that has a Critical Root Zone (CRZ) extending onto the development site.	

WATERMAIN SCHEDULE

	Station	Description	Finished Grade	Top of Waterain	As Built Watermain
A	0+000.00	TEE	95.670	93.270	
	0+003.59	VB	95.830	93.430	
B	0+073.53	BLDG B	96.460	94.060	

Date 2025-07-18

CROSSING SCHEDULE

1	200 mm ø W/M	0.620 m	CLEARANCE OVER	250 mm ø	SAN
2	200 mm ø W/M	0.515 m	CLEARANCE UNDER	825 mm ø	STM
3	375 mm ø STM	0.820 m	CLEARANCE OVER	250 mm ø	SAN
4	375 mm ø STM	0.340 m	CLEARANCE OVER	200 mm ø	W/M
5	200 mm ø W/M	0.250 m	CLEARANCE OVER	250 mm ø	SAN
6	250 mm ø STM	1.430 m	CLEARANCE OVER	250 mm ø	SAN
7	250 mm ø STM	0.830 m	CLEARANCE OVER	200 mm ø	W/M

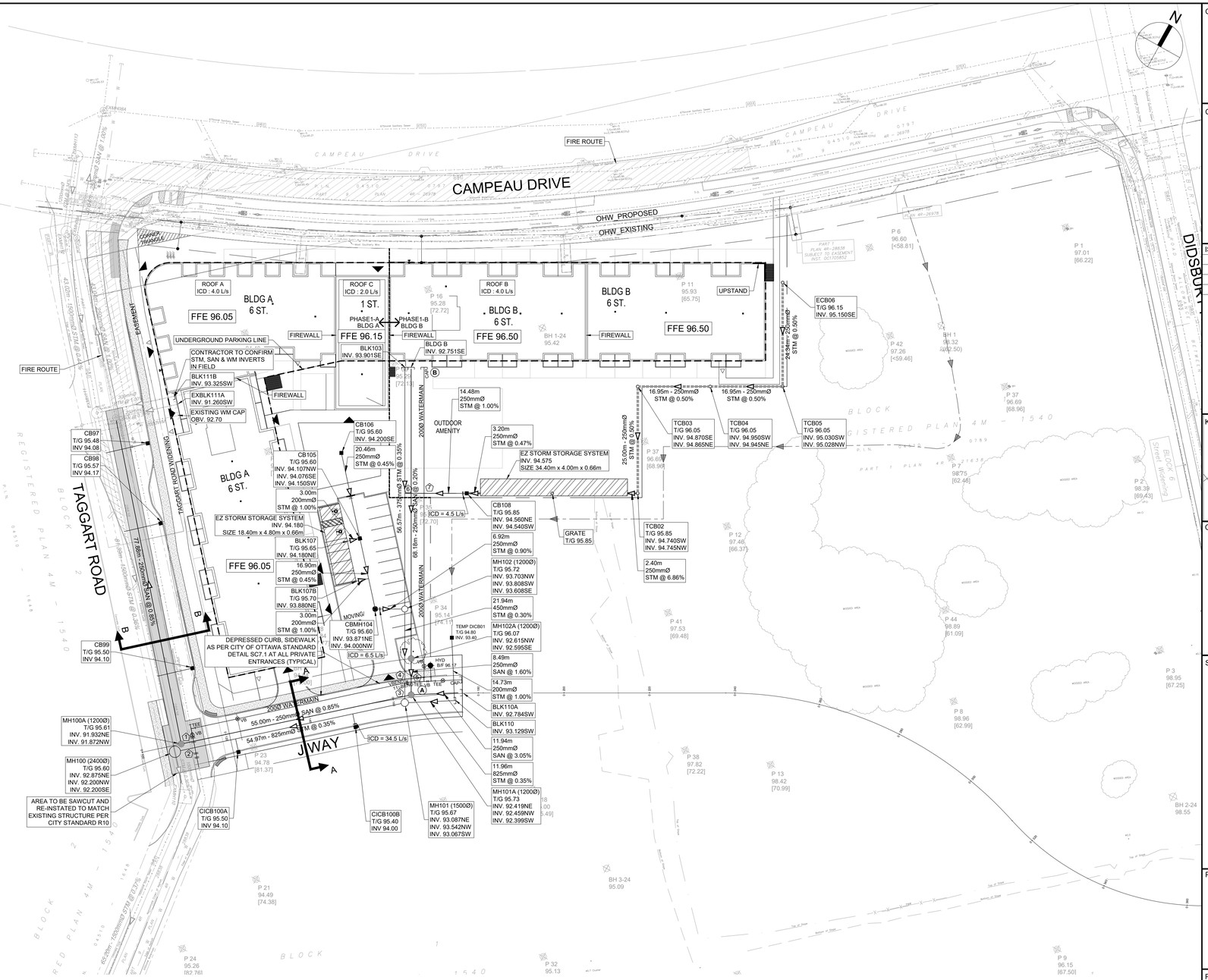

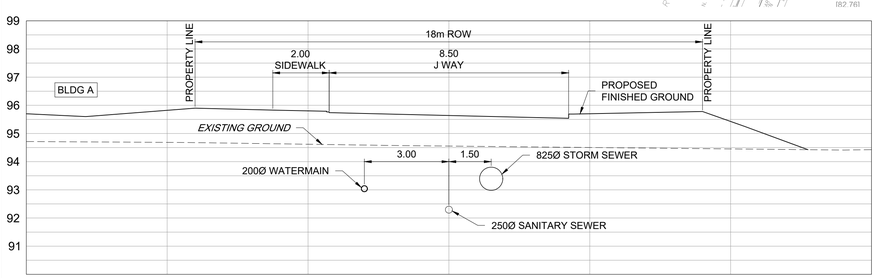

SECTION A

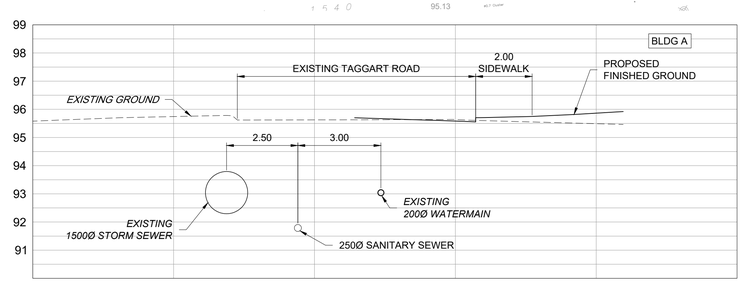

SECTION B

CLIENT

8201 CAMPEAU DRIVE Inc.

COPYRIGHT

This drawing has been prepared solely for the intended use, thus any reproduction or distribution for any purpose other than authorized by Arcadis is forbidden. Written dimensions shall have precedence over scaled dimensions. Contractors shall verify and be responsible for all dimensions and conditions on the job, and Arcadis shall be informed of any variations from the dimensions and conditions shown on the drawing. Shop drawings shall be submitted to Arcadis for general conformance before proceeding with fabrication.

Arcadis Professional Services (Canada) Inc.
formerly IBI Group Professional Services (Canada) Inc

ISSUES

No.	DESCRIPTION	DATE
1	SUBMISSION 1 FOR CITY REVIEW	2025-07-18
2	SUBMISSION 2 FOR CITY REVIEW	2025-10-03
3	SUBMISSION 3 FOR CITY REVIEW	2026-03-13

SEE 010 FOR NOTES, LEGEND, CB TABLE, STREET SECTIONS AND DETAILS

KEY PLAN

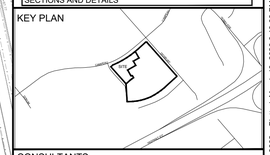

CONSULTANTS

1:500 0 5 15 25m

SEAL

LICENSED PROFESSIONAL ENGINEER
S. E. LABADIE
100214983
2026/03/13
PROVINCE OF ONTARIO

PRIME CONSULTANT

ARCADIS

333 Preston Street - Suite 500
Ottawa ON K1S 5N4 Canada
tel 613 225 1311
www.arcadis.com

PROJECT

8201 CAMPEAU DRIVE

PROJECT NO: 30282806

DRAWN BY:	CHECKED BY:
C.C.	T.B.
PROJECT MGR:	APPROVED BY:
S.L.	S.L.

SHEET TITLE

GENERAL PLAN OF SERVICES

SHEET NUMBER 001

ISSUE 3

SCALE CHECK 1 in 10mm

19407

D07-12-25-0103

File Location: C:\Users\cormierc3992\OCA\ACCDocs\Arcadis ACC US\ACA-30282806-8201 Campeau Drive\Project Files\10_WIP\04_CIVIL\Sheets\001 GENERAL PLAN OF SERVICES.dwg Last Saved: March 13, 2026, by cormierc3992 Plotted: March 13, 2026 3:43:36 PM by Cormier, Chris

Appendix B

Boundary Conditions
8201 Campeau Drive – 2025 Update

Provided Information

Scenario	Demand	
	L/min	L/s
Average Daily Demand	95	1.59
Maximum Daily Demand	238	3.96
Peak Hour	524	8.74
Fire Flow Demand #1	18,000	300.00

Location

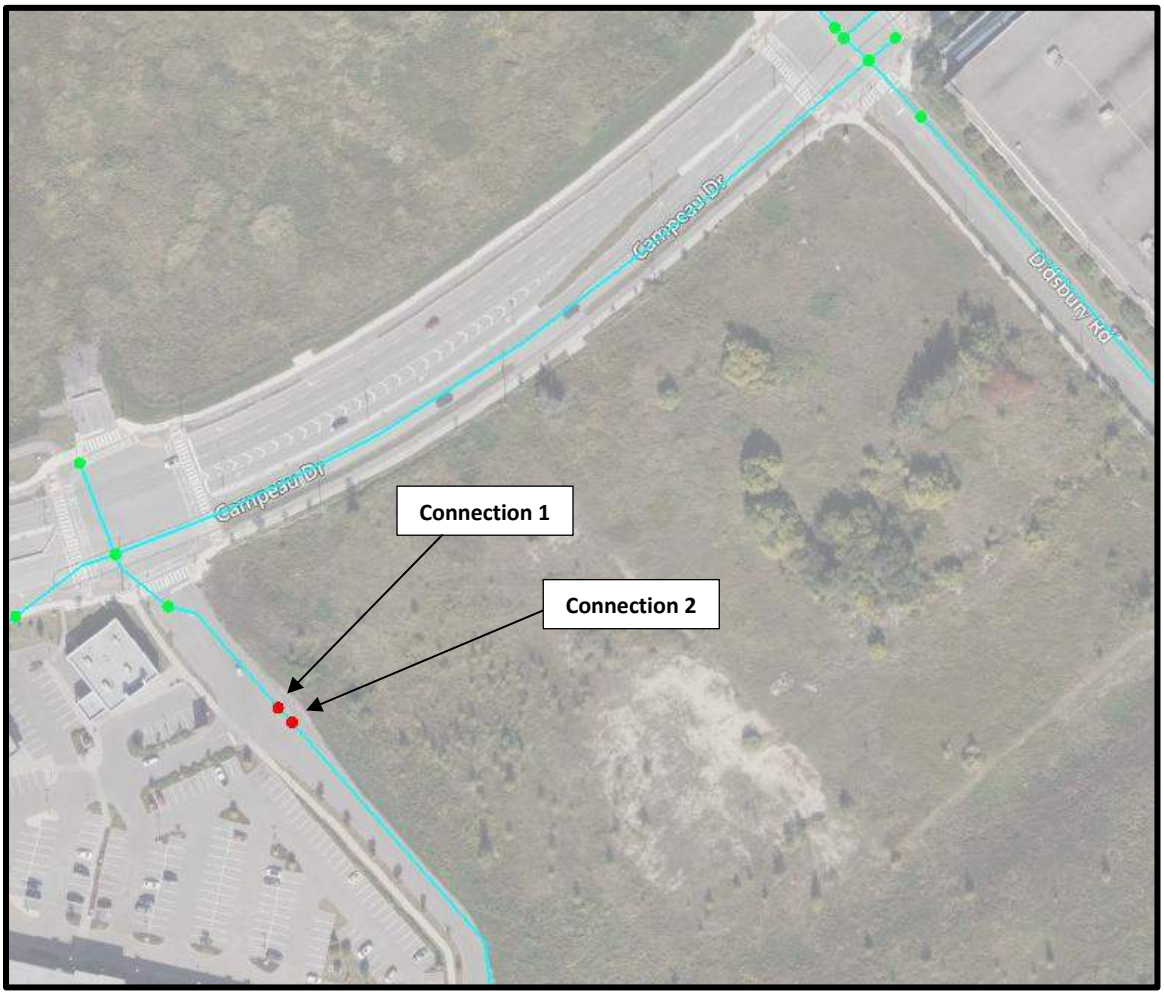

Results

Connection 1

Demand Scenario	Head (m)	Pressure[1] (psi)
Maximum HGL	162.0	93.9
Peak Hour	155.8	85.1
Max Day plus Fire Flow #1	133.5	53.5

[1] Ground Elevation = 95.9 m

Connection 2

Demand Scenario	Head (m)	Pressure[1] (psi)
Maximum HGL	162.0	93.9
Peak Hour	155.8	85.1
Max Day plus Fire Flow #1	132.2	51.6

[1] Ground Elevation = 95.9 m

Notes

1. The IWSD has recently updated their water modelling software. Any significant difference between previously received BC results and newly received BC results could be attributed to this update.
2. As per the Ontario Building Code in areas that may be occupied, the static pressure at any fixture shall not exceed 552 kPa (80 psi.) Pressure control measures to be considered are as follows, in order of preference:
    - If possible, systems to be designed to residual pressures of 345 to 552 kPa (50 to 80 psi) in all occupied areas outside of the public right-of-way without special pressure control equipment.
    - Pressure reducing valves to be installed immediately downstream of the isolation valve in the home/ building, located downstream of the meter so it is owner maintained.

Disclaimer

The boundary condition information is based on current operation of the city water distribution system. The computer model simulation is based on the best information available at the time. The operation of the water distribution system can change on a regular basis, resulting in a variation in boundary conditions. The physical properties of watermains deteriorate over time, as such must be assumed in the absence of actual field test data. The variation in physical watermain properties can therefore alter the results of the computer model simulation. Fire Flow analysis is a reflection of available flow in the watermain; there may be additional restrictions that occur between the watermain and the hydrant that the model cannot take into account.

WATERMAIN DEMAND CALCULATION SHEET

ARCADIS IBI GROUP
500-333 Preston Street
Ottawa, Ontario K1S 5N4 Canada
arcadis.com

WATERMAIN DEMAND CALCULATION SHEET
8201 Campeau Drive | Patry Group / Theberge Homes
147814 -6.0 | Rev #2 | 2025-06-06
Prepared By: MAP | Checked By: SEL

NODE	RESIDENTIAL				NON-RESIDENTIAL (ICI)			AVERAGE DAILY DEMAND (l/s)			MAXIMUM DAILY DEMAND (l/s)			MAXIMUM HOURLY DEMAND (l/s)			FIRE DEMAND (l/min)
	1 Bedroom Apartment	2 Bedroom Apartment	3 Bedroom Apartment	POPULATION	INDUST. (ha)	COMM. (m2)	INSTIT. (pp)	RESIDENTIAL	ICI	TOTAL	RESIDENTIAL	ICI	TOTAL	RESIDENTIAL	ICI	TOTAL	
Building A + B	297	12	16	490.6				1.59		1.59	3.97		3.97	8.74		8.74	18,000

POPULATION DENSITY		WATER DEMAND RATES		PEAKING FACTORS		FIRE DEMANDS	
1 Bedroom Apartment	1.4 persons/unit	Residential	280 l/cap/day	Maximum Daily		Single Family	
2 Bedroom Apartment	2.1 persons/unit	Commercial Shopping Center	2,500 L/(1000m2)/day	Residential	2.5 x avg. day	Semi Detached & Townhouse	15,000 l/min (250.0 l/s)
3 Bedroom Apartment	3.1 persons/unit	Institutional	75 l/cap/day	Commercial	1.5 x avg. day	Medium Density	15,000 l/min (250 l/s)
				Maximum Hourly			
				Residential	2.2 x avg. day		
				Commercial	1.8 x avg. day		

ARCADIS PROFESSIONAL SERVICES (CANADA) INC.
500-333 Preston Street
Ottawa, Ontario K1S 5N4 Canada
arcadis.com

FIRE UNDERWRITERS SURVEY
8201 Campeau Drive | Patry Group / Theberge Homes
147814 -6.0 | Rev #2 | 2025-06-06
Prepared By: MAP | Checked By: SEL

STEP	Contents	Description		Adjustment Factor		Result	
1	**Building A (AA)** 6-storey residential	Floor 1 Floors 2-6	1452 1404	Floors Floors	1 5	1452 7020	m2 m2
	Total Effective Floor Area					**8472**	m2
2	**Type of Construction**	**Type V** Wood Frame **Type III** Ordinary Construction **Type II** Noncombustible Construction **Type I** Fire Resistive Construction	1.5 1.0 0.8 0.6	Type V Wood Frame	1.5		
3	**Required Fire Flow**	RFF = 220C√A, rounded to nearest 1000 L/min				**30000**	L/min
4	**Occupancy and Contents**	Noncombustible Contents Limited Conbustible Contents Combustible Contents Free Burning Contents Rapid Burning Contents	-25% -15% 0% 15% 25%	Limited Conbustible Contents	-15%	-4500	L/min
	Fire Flow					**25500**	L/min
5	**Automatic Sprinkler Protection**	Automatic Sprinkler Conforming to NFPA 13	-30%	Yes	-30%	-7650	L/min
		Standard Water Supply for both the system and Fire Department Hose Lines	-10%	Yes	-10%	-2550	L/min
		Fully Supervised System	-10%	No			
	Total Sprinkler Adjustment					**-10200**	L/min
6	**Exposure Adjustment**	Based on **Table 6** Exposure Adjustement Charges for Subject Building					
	North	Separation (m) Length X Height Factor (m.storeys) Construction Type		Firewall	10%	2550	L/min
	South	Separation (m) Length X Height Factor (m.storeys) Construction Type	>30			0	L/min
	East	Separation (m) Length X Height Factor (m.storeys) Construction Type	>30			0	L/min
	West	Separation (m) Length X Height Factor (m.storeys) Construction Type	>30			0	L/min
	Total Exposure Adjustment					**2550**	L/min
7	**Total Required Fire Flow**					**17850**	L/min
		Rounded to Nearest 1000 L/min				**18000**	L/min
						300	L/s

Notes
1. Fire flow calculation are based on Fire Underwriters Survey version 2020.
2. If any vertical opening in the building are unprotected (e.g. interconnected floor spaces, elevators etc.), consider the two largest adjoining floor area plus 50% of all floors immediately above them up to a maximum of eight.

ARCADIS PROFESSIONAL SERVICES (CANADA) INC.
500-333 Preston Street
Ottawa, Ontario K1S 5N4 Canada
arcadis.com

FIRE UNDERWRITERS SURVEY
8201 Campeau Drive | Patry Group / Theberge Homes
147814 -6.0 | Rev #2 | 2025-06-06
Prepared By: MAP | Checked By: SEL

STEP	Contents	Description		Adjustment Factor		Result	
1	**Building A (AB) + LINK**	Floor 1	1432	Floors	1	1432	m2
	6-storey residential	Floors 2-6	986	Floors	5	4930	m2
	Total Effective Floor Area					**6362**	m2
2	**Type of Construction**	**Type V** Wood Frame	1.5	Type V Wood Frame	1.5		
		Type III Ordinary Construction	1.0				
		Type II Noncombustible Construction	0.8				
		Type I Fire Resistive Construction	0.6				
3	**Required Fire Flow**	RFF = 220C√A, rounded to nearest 1000 L/min				**26000**	L/min
4	**Occupancy and Contents**	Noncombustible Contents	-25%	Limited Conbustible Contents	-15%	-3900	L/min
		Limited Conbustible Contents	-15%				
		Combustible Contents	0%				
		Free Burning Contents	15%				
		Rapid Burning Contents	25%				
	Fire Flow					**22100**	L/min
5	**Automatic Sprinkler Protection**	Automatic Sprinkler Conforming to NFPA 13	-30%	Yes	-30%	-6630	L/min
		Standard Water Supply for both the system and Fire Department Hose Lines	-10%	Yes	-10%	-2210	L/min
		Fully Supervised System	-10%	No		0	L/min
	Total Sprinkler Adjustment					**-8840**	L/min
6	**Exposure Adjustment**	Based on **Table 6** Exposure Adjustement Charges for Subject Building					
	North	Separation (m)	>30			0	L/min
		Length X Height Factor (m.storeys)					
		Construction Type					
	South	Separation (m)		Firewall	10%	2210	L/min
		Length X Height Factor (m.storeys)					
		Construction Type					
	East	Separation (m)		Firewall	10%	2210	L/min
		Length X Height Factor (m.storeys)					
		Construction Type					
	West	Separation (m)	28.6	With unprotected opening	0%	0	L/min
		Length X Height Factor (m.storeys)	21.1				
		Construction Type	Type III				
	Total Exposure Adjustment					**4420**	L/min
7	**Total Required Fire Flow**					**17680**	L/min
		Rounded to Nearest 1000 L/min				**18000**	L/min
						300	L/s

Notes 1. Fire flow calculation are based on Fire Underwriters Survey version 2020.

2. If any vertical opening in the building are unprotected (e.g. interconnected floor spaces, elevators etc.), consider the two largest adjoining floor area plus 50% of all floors immediately above them up to a maximum of eight.

ARCADIS PROFESSIONAL SERVICES (CANADA) INC.
500-333 Preston Street
Ottawa, Ontario K1S 5N4 Canada
arcadis.com

FIRE UNDERWRITERS SURVEY
8201 Campeau Drive | Patry Group / Theberge Homes
147814 -6.0 | Rev #2 | 2025-06-06
Prepared By: MAP | Checked By: SEL

STEP	Contents	Description		Adjustment Factor		Result	
1	**Building B (BA)** 6-storey residential	Floor 1 Floors 2-6	1251 1089	Floors Floors	1 5	1251 5445	m2 m2
	Total Effective Floor Area					**6696**	m2
2	**Type of Construction**	**Type V** Wood Frame **Type III** Ordinary Construction **Type II** Noncombustible Construction **Type I** Fire Resistive Construction	1.5 1.0 0.8 0.6	Type V Wood Frame	1.5		
3	**Required Fire Flow**	RFF = 220C√A, rounded to nearest 1000 L/min				**27000**	L/min
4	**Occupancy and Contents**	Noncombustible Contents Limited Conbustible Contents Combustible Contents Free Burning Contents Rapid Burning Contents	-25% -15% 0% 15% 25%	Limited Conbustible Contents	-15%	-4050	L/min
	Fire Flow					**22950**	L/min
5	**Automatic Sprinkler Protection**	Automatic Sprinkler Conforming to NFPA 13 Standard Water Supply for both the system and Fire Department Hose Lines Fully Supervised System	-30% -10% -10%	Yes Yes No	-30% -10%	-6885 -2295	L/min L/min
	Total Sprinkler Adjustment					**-9180**	L/min
6	**Exposure Adjustment**	Based on **Table 6** Exposure Adjustement Charges for Subject Building					
	North	Separation (m) Length X Height Factor (m.storeys) Construction Type	>30			0	L/min
	South	Separation (m) Length X Height Factor (m.storeys) Construction Type	>30			0	L/min
	East	Separation (m) Length X Height Factor (m.storeys) Construction Type		Firewall	10%	2295	L/min
	West	Separation (m) Length X Height Factor (m.storeys) Construction Type		Firewall	10%	2295	L/min
	Total Exposure Adjustment					**4590**	L/min
7	**Total Required Fire Flow**					**18360**	L/min
		Rounded to Nearest 1000 L/min				**18000**	L/min
						300	L/s

Notes
1. Fire flow calculation are based on Fire Underwriters Survey version 2020.
2. If any vertical opening in the building are unprotected (e.g. interconnected floor spaces, elevators etc.), consider the two largest adjoining floor area plus 50% of all floors immediately above them up to a maximum of eight.

ARCADIS PROFESSIONAL SERVICES (CANADA) INC.
500-333 Preston Street
Ottawa, Ontario K1S 5N4 Canada
arcadis.com

FIRE UNDERWRITERS SURVEY
8201 Campeau Drive | Patry Group / Theberge Homes
147814 -6.0 | Rev #2 | 2025-06-06
Prepared By: MAP | Checked By: SEL

STEP	Contents	Description		Adjustment Factor		Result	
1	**Building B (BB)** 6-storey residential	Floor 1 Floors 2-6	844 747	Floors Floors	1 5	844 3735	m2 m2
	Total Effective Floor Area					**4579**	m2
2	**Type of Construction**	**Type V** Wood Frame **Type III** Ordinary Construction **Type II** Noncombustible Construction **Type I** Fire Resistive Construction	1.5 1.0 0.8 0.6	Type V Wood Frame	1.5		
3	**Required Fire Flow**	RFF = 220C√A, rounded to nearest 1000 L/min				**22000**	L/min
4	**Occupancy and Contents**	Noncombustible Contents Limited Conbustible Contents Combustible Contents Free Burning Contents Rapid Burning Contents	-25% -15% 0% 15% 25%	Limited Conbustible Contents	-15%	-3300	L/min
	Fire Flow					**18700**	L/min
5	**Automatic Sprinkler Protection**	Automatic Sprinkler Conforming to NFPA 13	-30%	Yes	-30%	-5610	L/min
		Standard Water Supply for both the system and Fire Department Hose Lines	-10%	Yes	-10%	-1870	L/min
		Fully Supervised System	-10%	No			
	Total Sprinkler Adjustment					**-7480**	L/min
6	**Exposure Adjustment**	Based on **Table 6** Exposure Adjustement Charges for Subject Building					
	North	Separation (m) Length X Height Factor (m.storeys) Construction Type	>30			0	L/min
	South	Separation (m) Length X Height Factor (m.storeys) Construction Type	>30			0	L/min
	East	Separation (m) Length X Height Factor (m.storeys) Construction Type	>30			0	L/min
	West	Separation (m) Length X Height Factor (m.storeys) Construction Type		Firewall	10%	1870	L/min
	Total Exposure Adjustment					**1870**	L/min
7	**Total Required Fire Flow**					**13090**	L/min
		Rounded to Nearest 1000 L/min				**13000**	L/min
						217	L/s

Notes
1. Fire flow calculation are based on Fire Underwriters Survey version 2020.
2. If any vertical opening in the building are unprotected (e.g. interconnected floor spaces, elevators etc.), consider the two largest adjoining floor area plus 50% of all floors immediately above them up to a maximum of eight.

8201 CAMPEAU DRIVE WATER MODEL

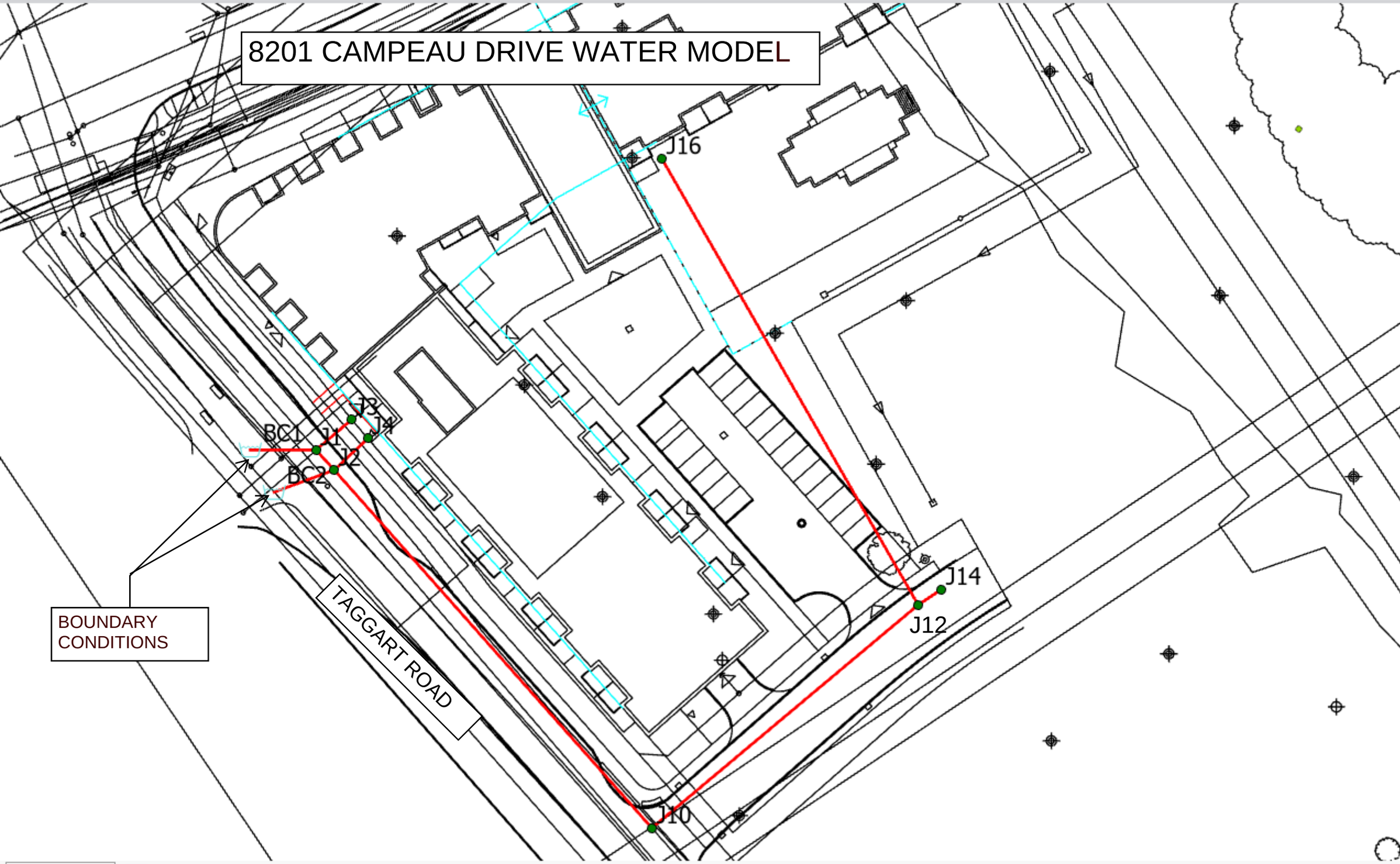

1:598

3.1449173°E 41.0423266°N

Selected Features: 0

		ID	Demand (L/s)	Elevation (m)	Head (m)	Pressure (kPa)
1		J1	0.00	95.55	162.00	651.16
2		J10	0.00	95.50	162.00	651.64
3		J12	0.00	95.65	162.00	650.17
4		J14	0.00	95.70	162.00	649.68
5		J16	0.72	96.50	162.00	641.84
6		J2	0.00	95.55	162.00	651.16
7		J3	0.44	95.80	162.00	648.71
8		J4	0.44	95.80	162.00	648.71

		ID	Demand (L/s)	Elevation (m)	Head (m)	Pressure (kPa)
1		J1	0.00	95.55	155.80	590.39
2		J10	0.00	95.50	155.79	590.78
3		J12	0.00	95.65	155.78	589.24
4		J14	0.00	95.70	155.78	588.75
5		J16	3.94	96.50	155.77	580.81
6		J2	0.00	95.55	155.80	590.39
7		J3	2.45	95.80	155.80	587.93
8		J4	2.45	95.80	155.80	587.93

		ID	From Node	To Node	Length (m)	Diameter (mm)	Roughness	Flow (L/s)	Velocity (m/s)	Headloss (m)	HL/1000 (m/k-m)	Status	Flow Reversal Count
1		P11	J1	J2	3.90	204.00	110.00	1.84	0.06	0.00	0.04	Open	0
2		P13	J16	J12	74.05	204.00	110.00	-3.94	0.12	0.01	0.14	Open	0
3		P15	J12	J14	4.02	204.00	110.00	0.00	0.00	0.00	0.00	Open	0
4		P17	J12	J10	50.00	204.00	110.00	-3.94	0.12	0.01	0.14	Open	0
5		P19	J10	J2	68.87	204.00	110.00	-3.94	0.12	0.01	0.14	Open	0
6		P21	J1	BC1	9.45	204.00	110.00	-4.29	0.13	0.00	0.17	Open	0
7		P23	J2	BC2	9.19	204.00	110.00	-4.55	0.14	0.00	0.19	Open	0
8		P25	J2	J4	6.63	204.00	110.00	2.45	0.07	0.00	0.06	Open	0
9		P27	J1	J3	6.76	204.00	110.00	2.45	0.07	0.00	0.06	Open	0

		ID	Capacity Assessment	Total Demand (L/s)	Hydrant Available Flow (L/s)	Critical Node ID for Design Run	Critical Node Pressure at Available Flow (kPa)	Critical Node Pressure at Fire Demand (kPa)	Critical Pressure for Design Run (kPa)	Hydrant Design Flow (L/s)	Hydrant Pressure at Design Flow (kPa)
1	☐	J14	FAIL	300.00	184.70	J14	139.96	-180.54	139.96	184.70	139.96

Appendix C

ARCADIS PROFESSIONAL SERVICES (CANADA) INC.
500-333 Preston Street
Ottawa, Ontario K1S 5N4 Canada
arcadis.com

SANITARY SEWER DESIGN SHEET

8201 Campeau Drive
8201 Campeau Drive Inc.
CITY OF OTTAWA

LOCATION				RESIDENTIAL										ICI AREAS								INFILTRATION ALLOWANCE			FIXED FLOW (L/s)		TOTAL FLOW	PROPOSED SEWER DESIGN						
				AREA w/ Units (Ha)	UNIT TYPES				AREA w/o Units (Ha)	POPULATION		RES PEAK FACTOR	PEAK FLOW (L/s)	AREA (Ha)						ICI PEAK FACTOR	PEAK FLOW (L/s)	AREA (Ha)		FLOW				CAPACITY	LENGTH	DIA	SLOPE	VELOCITY (full)	AVAILABLE CAPACITY	
STREET	AREA ID	FROM MH	TO MH		AVG	1 Bed APT	2 Bed APT	3 Bed APT		IND	CUM			INSTITUTIONAL		COMMERCIAL		INDUSTRIAL				IND	CUM	(L/s)	IND	CUM	(L/s)	(L/s)	(m)	(mm)	(%)	(m/s)	L/s	(%)
														IND	CUM	IND	CUM	IND	CUM															
FUTURE DEV.	FUT	FUT	BLK110A	2.82	3000					5400.0	5400.0	2.77	48.49	0.00	0.0	0.00	0.0	0.00	0.0	1.00	0.00	2.82	2.8	0.93	0.00	0.0	49.42	57.20	31.00	250	0.85	1.129	7.77	13.59%
J WAY		BLK110A	MH101A	0.01						0.0	5400.0	2.77	48.49	0.00	0.0	0.00	0.0	0.00	0.0	1.00	0.00	0.01	2.8	0.93	0.00	0.0	49.43	57.20	42.90	250	0.85	1.129	7.77	13.58%
PHASE 2	BLDG B	BLDG B	MH102A	0.66		134	7	6		217.3	217.3	3.51	2.47	0.00	0.0	0.00	0.0	0.00	0.0	1.00	0.00	0.66	0.7	0.22	0.00	0.0	2.69	57.20	16.00	250	0.85	1.129	54.51	95.30%
	MH102A	MH102A	MH101A	0.01						0.0	217.3	3.51	2.47	0.00	0.0	0.00	0.0	0.00	0.0	1.00	0.00	0.01	0.0	0.00	0.00	0.0	2.47	57.20	16.00	250	0.85	1.129	54.72	95.68%
J WAY	MH101A	MH101A	MH100A	0.06						0.0	5617.3	2.76	50.21	0.00	0.0	0.00	0.0	0.00	0.0	1.00	0.00	0.06	3.6	1.17	0.00	0.0	51.38	57.20	55.00	250	0.85	1.129	5.81	10.17%
TAGGART ROAD	MH100A	MH100A	EXMH10A	0.09						0.0	5617.3	2.76	50.21	0.00	0.0	0.00	0.0	0.00	0.0	1.00	0.00	0.09	3.6	1.20	0.00	0.0	51.41	57.20	77.88	250	0.85	1.129	5.78	10.11%
TAGGART ROAD	BLDG A	CAP	EXMH10A	0.34		155	11	10		265.1	265.1	3.48	2.99	0.00	0.0	0.00	0.0	0.00	0.0	1.00	0.00	0.34	0.3	0.11	0.00	0.0	3.10	43.87	20.00	250	0.50	0.866	40.77	92.93%
CAMPEAU DRIVE	FULL BUILDOUT - NO UPSIZE	EXMH10A	EXMH9A							0.0	5882.4	2.74	52.29	0.00	0.0	0.00	0.0	0.00	0.0	1.00	0.00	0.00	4.0	1.31	**1.29**	1.29	54.90	45.59	42.90	250	0.54	0.900	-9.31	-20.41%
CAMPEAU DRIVE	PHASE 1 ONLY	EXMH10A	EXMH9A							0.0	482.4	3.39	5.29	0.00	0.0	0.00	0.0	0.00	0.0	1.00	0.00	0.00	4.0	1.31	**1.29**	1.29	7.90	45.59	42.90	250	0.54	0.900	37.69	82.68%
CAMPEAU DRIVE	FULL BUILDOUT - UPSIZE	EXMH10A	EXMH9A							0.0	5882.4	2.74	52.29	0.00	0.0	0.00	0.0	0.00	0.0	1.00	0.00	0.00	4.0	1.31	**1.29**	1.29	54.90	74.13	42.90	300	0.54	1.016	19.24	25.95%
CAMPEAU DRIVE	FULL BUIDLOUT - NO UPSIZE	EXMH9A	EXMH8A							0.0	5882.4	2.74	52.29	0.00	0.0	0.00	0.0	0.00	0.0	1.00	0.00	0.00	4.0	1.31	0.00	1.29	54.90	39.24	31.00	250	0.40	0.774	-15.66	-39.91%
CAMPEAU DRIVE	PHASE 1 ONLY	EXMH9A	EXMH8A							0.0	482.4	3.39	5.29	0.00	0.0	0.00	0.0	0.00	0.0	1.00	0.00	0.00	4.0	1.31	0.00	1.29	7.90	39.24	31.00	250	0.40	0.774	31.34	79.87%
CAMPEAU DRIVE	FULL BUILDOUT - UPSIZE	EXMH9A	EXMH8A							0.0	5882.4	2.74	52.29	0.00	0.0	0.00	0.0	0.00	0.0	1.00	0.00	0.00	4.0	1.31	0.00	1.29	54.90	63.80	31.00	300	0.40	0.874	8.91	13.96%

Design Parameters:

Residential			ICI Areas			
AVG	1.8	p/p/u				
1 Bed	1.4	p/p/u	INST	28,000	L/Ha/day	
2 Bed	2.1	p/p/u	COM	28,000	L/Ha/day	
3 Bed	2.5	p/p/u	IND	35,000	L/Ha/day	MOE Chart
Other	60	p/p/Ha		17000	L/Ha/day	

Notes:
1. Mannings coefficient (n) = 0.013
2. Demand (per capita): 280 L/day 200 L/day
3. Infiltration allowance: 0.33 L/s/Ha
4. Residential Peaking Factor:
   Harmon Formula = 1+(14/(4+(P/1000)^0.5))0.8
   where K = 0.8 Correction Factor
5. Commercial and Institutional Peak Factors based on total area,
1.5 if greater than 20%, otherwise 1.0

Designed: MAP

Checked: SEL

Dwg. Reference: 30282806-400

No.	Revision	Date
1.	Servicing Brief - Submission No. 1	2025-07-18
2.	Servicing Brief - Submission No. 2	2026-03-13

File Reference:	Date:	Sheet No:
30282806-6.04.04	2026-03-13	1 of 1

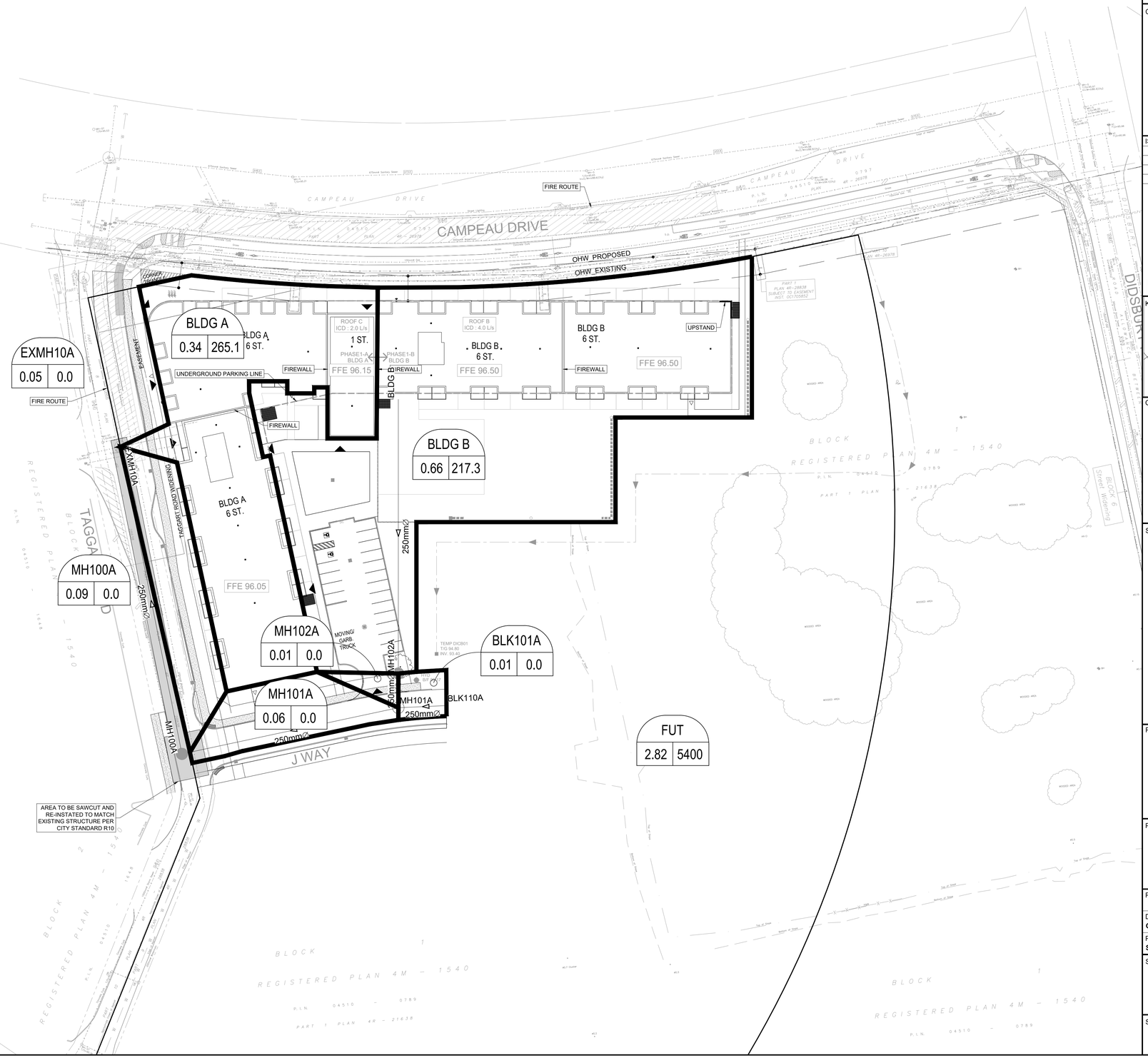

CLIENT

8201 CAMPEAU DRIVE Inc.

COPYRIGHT

This drawing has been prepared solely for the intended use, thus any reproduction or distribution for any purpose other than authorized by Arcadis is forbidden. Written dimensions shall have precedence over scaled dimensions. Contractors shall verify and be responsible for all dimensions and conditions on the job, and Arcadis shall be informed of any variations from the dimensions and conditions shown on the drawing. Shop drawings shall be submitted to Arcadis for general conformance before proceeding with fabrication.

Arcadis Professional Services (Canada) Inc.
formerly IBI Group Professional Services (Canada) Inc.

ISSUES

No.	DESCRIPTION	DATE
1	SUBMISSION 1 FOR CITY REVIEW	2025-07-18
2	SUBMISSION 2 FOR CITY REVIEW	2025-10-03
3	SUBMISSION 3 FOR CITY REVIEW	2026-03-13

SEE 010 FOR NOTES, LEGEND, CB TABLE, STREET SECTIONS AND DETAILS

KEY PLAN

CONSULTANTS

1:500 0 5 15 25m

SEAL

LICENSED PROFESSIONAL ENGINEER
S. E. LABADIE
100214983
2026/03/13
PROVINCE OF ONTARIO

PRIME CONSULTANT

ARCADIS

333 Preston Street - Suite 500
Ottawa ON K1S 5N4 Canada
tel 613 225 1311
www.arcadis.com

PROJECT

8201 CAMPEAU DRIVE

PROJECT NO:
30282806

DRAWN BY:	CHECKED BY:
C.C.	**T.B.**
PROJECT MGR:	APPROVED BY:
S.L.	**S.L.**

SHEET TITLE

SANITARY DRAINAGE AREA PLAN

SHEET NUMBER 400

ISSUE 3

SCALE CHECK 1 in 10mm

19407

D07-12-25-0103

File Location: C:\Users\petitpam9476\DC\ACCDocs\Arcadis ACC US\VACA-30282806-8201 Campeau Drive\Project Files\10_WIP\04_CIVIL\Sheets\400 SANITARY DRAINAGE AREA PLAN.dwg Last Saved: October 2, 2025, by mlinem4626 Plotted: March 13, 2026 3:58:17 PM by Anderson Petitpas, Matt

Appendix D

ARCADIS PROFESSIONAL SERVICES (CANADA) INC.
500-333 Preston Street
Ottawa, Ontario K1S 5N4 Canada
arcadis.com

STORM SEWER DESIGN SHEET
8201 Campeau Drive
8201 Campeau Drive Inc.
CITY OF OTTAWA

LOCATION				AREA (Ha)										RATIONAL DESIGN FLOW																SEWER DATA								
STREET	AREA ID	FROM	TO	C= 0.20	C= 0.25	C= 0.57	C= 0.60	C= 0.64	C= 0.69	C= 0.70	C= 0.72	C= 0.81	C= 0.90	IND 2.78AC	CUM 2.78AC	INLET (min)	TIME IN PIPE	TOTAL (min)	i (2) (mm/hr)	i (5) (mm/hr)	i (10) (mm/hr)	i (100) (mm/hr)	2yr PEAK FLOW (L/s)	5yr PEAK FLOW (L/s)	10yr PEAK FLOW (L/s)	100yr PEAK FLOW (L/s)	FIXED FLOW IND	FIXED FLOW CUM	DESIGN FLOW (L/s)	CAPACITY (L/s)	LENGTH (m)	PIPE SIZE (mm) DIA	PIPE SIZE (mm) W	PIPE SIZE (mm) H	SLOPE (%)	VELOCITY (m/s)	AVAIL CAP (2yr) (L/s)	AVAIL CAP (2yr) (%)
SITE PLAN	ROOF B1, ROOF B2, CB108	BLK103	MH102				0.22						0.19	0.84	0.84	10.00	0.99	10.99	76.81	104.19	122.14	178.56	64.70	87.77	102.88	150.41	0.00	0.00	64.70	108.21	56.57	375			0.35	0.949	43.52	40.21%
SITE PLAN	CB106	CB106	CB105			0.09								0.14	0.14	10.00	0.41	10.41	76.81	104.19	122.14	178.56	10.95	14.86	17.42	25.47	0.00	0.00	10.95	41.80	20.46	250			0.45	0.825	30.85	73.80%
SITE PLAN	CB105	CB105	CBMH104								0.07			0.14	0.28	10.41	0.34	10.76	75.25	102.06	119.63	174.87	21.28	28.85	33.82	49.44	0.00	0.00	21.28	41.66	16.90	250			0.45	0.822	20.39	48.93%
SITE PLAN	CBMH104	CBMH104	MH102						0.05					0.10	0.38	10.76	0.10	10.86	74.02	100.36	117.63	171.93	28.03	38.00	44.54	65.10	0.00	0.00	28.03	58.86	6.92	250			0.90	1.162	30.83	52.38%
SITE PLAN		MH102	MH101											0.00	1.22	10.99	0.37	11.36	73.19	99.22	116.29	169.96	89.36	121.15	141.98	207.52	0.00	0.00	89.36	162.91	21.94	450			0.30	0.992	73.55	45.15%
J WAY	EXT	BLK110	MH101									3.79		8.53	8.53	13.60	0.12	13.73	65.28	88.36	103.51	151.19	557.09	754.12	883.35	1,290.32	0.00	0.00	557.09	885.93	11.96	825			0.35	1.606	328.84	37.12%
J WAY	CICB100A, CICB100B	MH101	MH100					0.02		0.09				0.21	9.97	13.73	0.57	14.30	64.95	87.91	102.97	150.41	647.26	876.13	1,026.24	1,499.01	0.00	0.00	647.26	885.93	54.97	825			0.35	1.606	238.67	26.94%
																																1500						
TAGGART ROAD	ROOF A1, ROOF A2, LINK	BLK111B	EXMH111										0.28	0.70	0.70	10.00	0.22	10.22	76.81	104.19	122.14	178.56	53.81	72.99	85.57	125.09	0.00	0.00	53.81	100.88	18.53	300			1.00	1.383	47.08	46.66%

Definitions:
Q = 2.78CiA, where:
Q = Peak Flow in Litres per Second (L/s)
A = Area in Hectares (Ha)
i = Rainfall intensity in millimeters per hour (mm/hr)
[i = 732.951 / (TC+6.199)^0.810] 2 YEAR
[i = 998.071 / (TC+6.053)^0.814] 5 YEAR
[i = 1174.184 / (TC+6.014)^0.816] 10 YEAR
[i = 1735.688 / (TC+6.014)^0.820] 100 YEAR

Notes:
1. Mannings coefficient (n) = 0.013

Designed: MAP

Checked: SEL

Dwg. Reference: 30282806-500

No.	Revision	Date
1.	Servicing Brief - Submission No. 1	2025-07-18
2.	Servicing Brief - Submission No. 2	2026-03-13

File Reference:	Date:	Sheet No:
30282806-6.04.04	2026-03-13	1 of 1

Roofs/Concrete/Asphalt	0.90
Undeveloped and Grass	0.20

As per the *City of Ottawa - Sewer Design Guidelines*, the 5-year balanced 'C' value must be increased by 25% for a 100-year storm event to a maximum of 1.0.

7.3 Pre-Development Drainage

It has been assumed that the existing development contained no stormwater management controls for flow attenuation. The estimated pre-development peak flows for the 5- and 100-year events are summarized below in ***Table 5***. See CCO-24-3115 - *PRE* in ***Appendix G*** for calculations.

Table 4: Pre-Development Runoff Summary

Drainage Area	Area (ha)	Q (L/s)	
		5-Year	100-Year
A1	6.16	356.68	764.07

7.4 Post-Development Drainage

To meet the stormwater objectives the development may contain a combination of flow attenuation with rooftop controls, surface, and subsurface storage.

Based on the criteria listed in *Section 7.2.1*, the development will be required to restrict flow to the 85 L/s/ha. It is estimated that the target release rate during the 100-year event will be ***523.3 L/s*** for an area of 6.157 ha. See ***Appendix G*** for calculations.

The following storage requirement estimate assumes that approximately 10% of the development area will be directed to the outlet without flow attenuation (Area B2). The estimated post-development peak flows for the 5 and 100-year events and the required storage volumes are summarized below in ***Table 6***, below.

Table 5: Post-Development Runoff Summary

Drainage Area	Area (ha)	5-year Peak Flow (L/s)	100-year Peak Flow (L/s)	100-year Storage Required (m^3)
B1	5.541	137.51	263.56	1729.59
B2	0.616	135.54	259.78	-
Total	**6.157**	**273.05**	**523.34**	**1729.59**

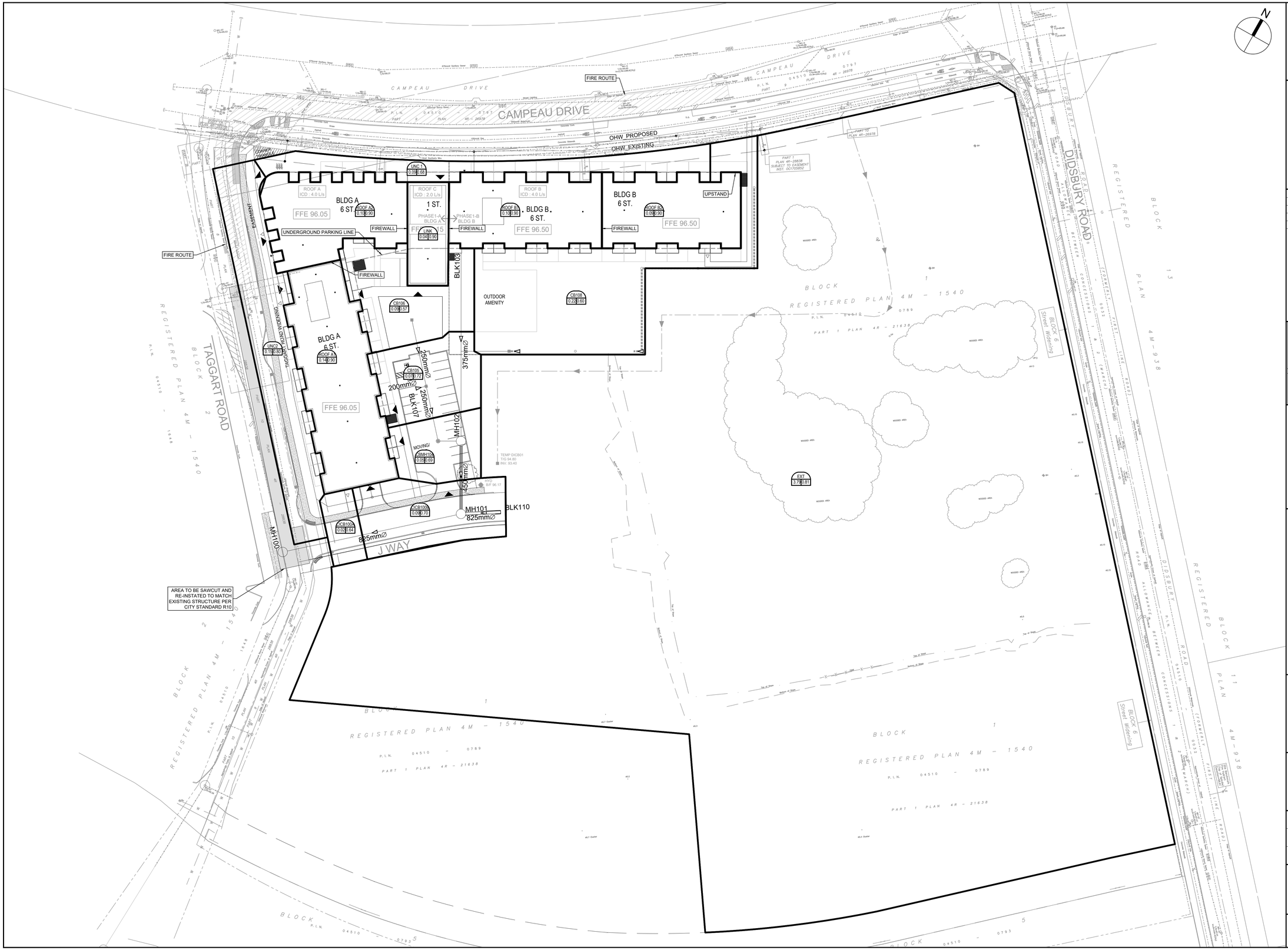

CLIENT

8201 CAMPEAU DRIVE Inc.

COPYRIGHT
This drawing has been prepared solely for the intended use, thus any reproduction or distribution for any purpose other than authorized by Arcadis is forbidden. Written dimensions shall have precedence over scaled dimensions. Contractors shall verify and be responsible for all dimensions and conditions on the job, and Arcadis shall be informed of any variations from the dimensions and conditions shown on the drawing. Shop drawings shall be submitted to Arcadis for general conformance before proceeding with fabrication.

Arcadis Professional Services (Canada) Inc.
formerly IBI Group Professional Services (Canada) Inc.

ISSUES

No.	DESCRIPTION	DATE
1	SUBMISSION 1 FOR CITY REVIEW	2025-07-18
2	SUBMISSION 2 FOR CITY REVIEW	2025-10-03
3	SUBMISSION 3 FOR CITY REVIEW	2026-03-13

SEE 010 FOR NOTES, LEGEND, CB TABLE, STREET SECTIONS AND DETAILS

KEY PLAN

CONSULTANTS

1:500 0 5 15 25m

SEAL

LICENSED PROFESSIONAL ENGINEER
S. E. LABADIE
100214983
2026/03/13
PROVINCE OF ONTARIO

PRIME CONSULTANT

ARCADIS

333 Preston Street - Suite 500
Ottawa ON K1S 5N4 Canada
tel 613 225 1311
www.arcadis.com

PROJECT
8201 CAMPEAU DRIVE

PROJECT NO: 30282806	
DRAWN BY: **C.C.**	CHECKED BY: **T.B.**
PROJECT MGR: **S.L.**	APPROVED BY: **S.L.**

SHEET TITLE
STORM DRAINAGE AREA PLAN

SHEET NUMBER	ISSUE
500	3

File Location: C:\Users\ccormier.39929\DC\ACCDocs\Arcadis ACC US\ACA-30282806-8201 Campeau Drive\Project Files\10_WIP\04_CIVIL\Sheets\500 STORM DRAINAGE AREA PLAN.dwg Last Saved: October 3, 2025, by mlinem4626 Plotted: March 13, 2026 3:43:52 PM by Cormier, Chris

D07-12-25-0103

SCALE CHECK 1 in 19407 70mm

Formulas and Descriptions

i_{2yr} = 1:2 year Intensity = $732.951 / (T_c+6.199)^{0.810}$
i_{5yr} = 1:5 year Intensity = $998.071 / (T_c+6.053)^{0.814}$
i_{100yr} = 1:100 year Intensity = $1735.688 / (T_c+6.014)^{0.820}$
T_c = Time of Concentration (min)
C = Average Runoff Coefficient
A = Area (Ha)
Q = Flow = 2.78CiA (L/s)

Maximum Allowable Release Rate

Restricted Flowrate

Per McIntosh Perry Assesment of Adequacy of Public Services Report - 8201 Campeau Drive & 303 Didsbury Road (CCO-24-3115) dated 12 January 2024
Calculated at 85 L/s/ha with 1.24ha for this Phase (excluding park land)

Release Rate	85	L/s/ha
Phase 1	1.24	ha
Ultimate	6.157	ha
$Q_{restrictedPh1}$ =	105.40	L/s
$Q_{restrictedUlt}$ =	523.35	L/s

Uncontrolled Release ($Q_{uncontrolled} = 2.78*C*i_{100yr}*A_{uncontrolled}$)

UNC 1		UNC 2	
C =	0.85	C =	1.00
T_c =	10 min	T_c =	10 min
i_{100yr} =	178.56 mm/hr	i_{100yr} =	178.56 mm/hr
$A_{uncontrolled}$ =	0.09 Ha	$A_{uncontrolled}$ =	0.15 Ha
$Q_{uncontrolled}$ =	37.97 L/s	$Q_{uncontrolled}$ =	74.46 L/s

Maximum Allowable Release Rate ($Q_{max\ allowable} = Q_{restricted} - Q_{uncontrolled}$)

$Q_{max\ allowable}$ = -7.03 L/s

See Section 4.3.1 in Design Brief

MODIFIED RATIONAL METHOD (100-Year, 5-Year & 2-Year Ponding)

Drainage Area: ROOF A

Area (Ha) 0.190 | Restricted Flow ICD $_{Actual}$ (L/s)= 3.00
C = 1.00 | Restricted Flow $Q_{r\ for\ swm\ calc}$ (L/s)= 3.00 | 50% reduction if sub-surface storage

100-Year Ponding

T_c Variable (min)	i_{100yr} (mm/hour)	Peak Flow Q_p=2.78xCi$_{100yr}$A (L/s)	Q_r (L/s)	Q_p-Q_r (L/s)	Volume 100yr (m^3)
145	28.36	14.98	3.00	11.98	104.22
150	27.61	14.58	3.00	11.58	104.26
155	26.91	14.21	3.00	11.21	**104.27**
160	26.24	13.86	3.00	10.86	104.25
165	25.61	13.53	3.00	10.53	104.21

100-Year +20% Ponding

100YRQ$_p$ 20% (L/s)	Qp - Qr (L/s)	Volume 100+20 (m^3)
17.05	14.05	**130.70**

Storage (m^3) Overflow	Required	Surface	Sub-surface	Balance	100+20 Overflow	Required	Balance
0.00	104.27	106.88	0	0.00	0.00	130.70	23.83
					convert to flow with peak Tc (L/s)		2.56

overflows to:

Drainage Area: ROOF A

Area (Ha) 0.190
C = 0.90 | Restricted Flow Q_r (L/s)= 3.00

2-Year Ponding

T_c Variable (min)	i_{2yr} (mm/hour)	Peak Flow Q_p=2.78xCi$_{2yr}$A (L/s)	Q_r (L/s)	Q_p-Q_r (L/s)	Volume 2yr (m^3)
58	25.18	11.97	3.00	8.97	31.21
59	24.86	11.82	3.00	8.82	31.22
60	24.56	11.67	3.00	8.67	**31.23**
61	24.26	11.53	3.00	8.53	31.23
62	23.97	11.40	3.00	8.40	31.23

Storage (m^3) Overflow	Required	Surface	Sub-surface	Balance
0.00	31.23	106.88	0	0.00

overflows to: 0.00

Drainage Area: ROOF B

Area (Ha) 0.190 | Restricted Flow ICD $_{Actual}$ (L/s)= 3.00
C = 1.00 | Restricted Flow $Q_{r\ for\ swm\ calc}$ (L/s)= 3.00 | 50% reduction if sub-surface storage

100-Year Ponding

T_c Variable (min)	i_{100yr} (mm/hour)	Peak Flow Q_p=2.78xCi$_{100yr}$A (L/s)	Q_r (L/s)	Q_p-Q_r (L/s)	Volume 100yr (m^3)
145	28.36	14.98	3.00	11.98	104.22
150	27.61	14.58	3.00	11.58	104.26
155	26.91	14.21	3.00	11.21	**104.27**
160	26.24	13.86	3.00	10.86	104.25
165	25.61	13.53	3.00	10.53	104.21

100-Year +20% Ponding

100YRQ$_p$ 20% (L/s)	Qp - Qr (L/s)	Volume 100+20 (m^3)
17.05	14.05	**130.70**

Storage (m^3) Overflow	Required	Surface	Sub-surface	Balance	100+20 Overflow	Required	Balance
0.00	104.27	106.88	0	0.00	0.00	130.70	23.83
					convert to flow with peak Tc (L/s)		2.56

overflows to:

Drainage Area: ROOF B

Area (Ha) 0.190
C = 0.90 | Restricted Flow Q_r (L/s)= 3.00

2-Year Ponding

T_c Variable (min)	i_{2yr} (mm/hour)	Peak Flow Q_p=2.78xCi$_{2yr}$A (L/s)	Q_r (L/s)	Q_p-Q_r (L/s)	Volume 2yr (m^3)
58	25.18	11.97	3.00	8.97	31.21
59	24.86	11.82	3.00	8.82	31.22
60	24.56	11.67	3.00	8.67	**31.23**
61	24.26	11.53	3.00	8.53	31.23
62	23.97	11.40	3.00	8.40	31.23

Storage (m^3) Overflow	Required	Surface	Sub-surface	Balance
0.00	31.23	106.88	0	0.00

overflows to: 0.00

Drainage Area: LINK

Area (Ha) 0.040 | Restricted Flow ICD $_{Actual}$ (L/s)= 2.00
C = 1.00 | Restricted Flow $Q_{r\ for\ swm\ calc}$ (L/s)= 2.00 | 50% reduction if sub-surface storage

100-Year Ponding

T_c Variable (min)	i_{100yr} (mm/hour)	Peak Flow Q_p=2.78xCi$_{100yr}$A (L/s)	Q_r (L/s)	Q_p-Q_r (L/s)	Volume 100yr (m^3)
40	75.15	8.36	2.00	6.36	15.25
45	69.05	7.68	2.00	5.68	15.33
50	63.95	7.11	2.00	5.11	**15.34**
55	59.62	6.63	2.00	4.63	15.28
60	55.89	6.22	2.00	4.22	15.18

100-Year +20% Ponding

100YRQ$_p$ 20% (L/s)	Qp - Qr (L/s)	Volume 100+20 (m^3)
8.53	6.53	**19.60**

Storage (m^3) Overflow	Required	Surface	Sub-surface	Balance	100+20 Overflow	Required	Balance
0.00	15.34	22.50	0	0.00	0.00	19.60	0.00
					convert to flow with peak Tc (L/s)		0.00

overflows to:

Drainage Area: LINK

Area (Ha) 0.040
C = 0.90 | Restricted Flow Q_r (L/s)= 2.00

2-Year Ponding

T_c Variable (min)	i_{2yr} (mm/hour)	Peak Flow Q_p=2.78xCi$_{2yr}$A (L/s)	Q_r (L/s)	Q_p-Q_r (L/s)	Volume 2yr (m^3)
17	57.42	5.75	2.00	3.75	3.82
18	55.49	5.55	2.00	3.55	3.84
19	53.70	5.37	2.00	3.37	**3.85**
20	52.03	5.21	2.00	3.21	3.85
21	50.48	5.05	2.00	3.05	3.85

Storage (m^3) Overflow	Required	Surface	Sub-surface	Balance
0.00	3.85	22.50	0	0.00

overflows to: 0.00

Drainage Area: CB108 TCB01, TCB02, TCB03, TCB04, TCB05, ECB06

Area (Ha) 0.220 | Restricted Flow ICD $_{Actual}$ (L/s)= 4.50
C = 0.75 | Restricted Flow $Q_{r\ for\ swm\ calc}$ (L/s)= 2.25 | 50% reduction if sub-surface storage

100-Year Ponding

T_c Variable (min)	i_{100yr} (mm/hour)	Peak Flow Q_p=2.78xCi$_{100yr}$A (L/s)	Q_r (L/s)	Q_p-Q_r (L/s)	Volume 100yr (m^3)
170	25.01	11.47	2.25	9.22	94.07
175	24.44	11.21	2.25	8.96	94.10
180	23.90	10.96	2.25	8.71	**94.11**
185	23.39	10.73	2.25	8.48	94.11
190	22.90	10.50	2.25	8.25	94.09

100-Year +20% Ponding

100YRQ$_p$ 20% (L/s)	Qp - Qr (L/s)	Volume 100+20 (m^3)
13.16	10.91	**117.79**

Storage (m^3) Overflow	Required	Surface	Sub-surface	Balance	100+20 Overflow	Required	Balance
0.00	94.11	7.77	87.18	0.00	0.00	117.79	22.84
					convert to flow with peak Tc (L/s)		2.12

overflows to: CBMH104

Drainage Area: CB108

Area (Ha) 0.220
C = 0.60 | Restricted Flow Q_r (L/s)= 2.25

2-Year Ponding

T_c Variable (min)	i_{2yr} (mm/hour)	Peak Flow Q_p=2.78xCi$_{2yr}$A (L/s)	Q_r (L/s)	Q_p-Q_r (L/s)	Volume 2yr (m^3)
61	24.26	8.90	2.25	6.65	24.35
62	23.97	8.80	2.25	6.55	24.35
63	23.69	8.69	2.25	6.44	**24.36**
64	23.42	8.59	2.25	6.34	24.36
65	23.15	8.50	2.25	6.25	24.36

Storage (m^3) Overflow	Required	Surface	Sub-surface	Balance
0.00	24.36	7.77	87.18	0.00

overflows to: CBMH104

Drainage Area	*CBMH104*	CB106, CB105, CBMH104	
Area (Ha)	0.218	Restricted Flow ICD $_{Actual}$ (L/s)=	6.50
C =	0.81	Restricted Flow $Q_{r\ for\ swm\ calc}$ (L/s)=	3.25

50% reduction if sub-surface storage

100-Year Ponding						100-Year +20% Ponding		
T_c Variable (min)	*i_{100yr} (mm/hour)*	*Peak Flow Q_p=2.78xCi $_{100yr}$A (L/s)*	*Q_r (L/s)*	*Q_p-Q_r (L/s)*	*Volume 100yr (m^3)*	*100YRQ$_p$ 20% (L/s)*	*Qp - Qr (L/s)*	*Volume 100+20 (m^3)*
120	32.89	16.21	3.25	12.96	93.28			
125	31.86	15.70	3.25	12.45	93.35			
130	30.90	15.22	3.25	11.97	**93.38**	18.27	15.02	**117.12**
135	30.00	14.78	3.25	11.53	93.37			
140	29.15	14.36	3.25	11.11	93.33			

Storage (m^3)					100+20		
Overflow	Required	Surface	Sub-surface	Balance	Overflow	Required	Balance
0.00	93.38	38.46	55.96	0.00	0.00	117.12	22.70
					convert to flow with peak Tc (L/s)		2.91

overflows to: CICB100B

Drainage Area	*CBMH104*	
Area (Ha)	0.218	
C =	0.65	Restricted Flow Q_r (L/s)= 3.25

2-Year Ponding					
T_c Variable (min)	*i_{2yr} (mm/hour)*	*Peak Flow Q_p=2.78xCi $_{2yr}$A (L/s)*	*Q_r (L/s)*	*Q_p-Q_r (L/s)*	*Volume 2yr (m^3)*
45	30.24	11.92	3.25	8.67	23.40
46	29.77	11.73	3.25	8.48	23.41
47	29.32	11.55	3.25	8.30	**23.42**
48	28.88	11.38	3.25	8.13	23.42
49	28.45	11.21	3.25	7.96	23.41

Storage (m^3)				
Overflow	Required	Surface	Sub-surface	Balance
0.00	23.42	38.46	55.96	0.00

overflows to: CICB100B

Drainage Area	*CICB100B*		
Area (Ha)	0.110	Restricted Flow ICD $_{Actual}$ (L/s)=	34.50
C =	0.86	Restricted Flow $Q_{r\ for\ swm\ calc}$ (L/s)=	34.50

50% reduction if sub-surface storage

100-Year Ponding						100-Year +20% Ponding		
T_c Variable (min)	*i_{100yr} (mm/hour)*	*Peak Flow Q_p=2.78xCi $_{100yr}$A (L/s)*	*Q_r (L/s)*	*Q_p-Q_r (L/s)*	*Volume 100yr (m^3)*	*100YRQ$_p$ 20% (L/s)*	*Qp - Qr (L/s)*	*Volume 100+20 (m^3)*
-5	1716.01	452.85	34.50	418.35	-125.50			
0	398.62	105.19	34.50	70.69	0.00			
5	242.70	64.05	34.50	29.55	**8.86**	76.86	42.36	**12.71**
10	178.56	47.12	34.50	12.62	7.57			
15	142.89	37.71	34.50	3.21	2.89			

Storage (m^3)					100+20		
Overflow	Required	Surface	Sub-surface	Balance	Overflow	Required	Balance
0.00	8.86	8.95		0.00	0.00	12.71	3.76
					convert to flow with peak Tc (L/s)		12.53

overflows to: offsite

Drainage Area	*CICB100B*	
Area (Ha)	0.110	
C =	0.69	Restricted Flow Q_r (L/s)= 34.50

2-Year Ponding					
T_c Variable (min)	*i_{2yr} (mm/hour)*	*Peak Flow Q_p=2.78xCi $_{2yr}$A (L/s)*	*Q_r (L/s)*	*Q_p-Q_r (L/s)*	*Volume 2yr (m^3)*
-2	229.26	48.40	34.50	13.90	-1.67
-1	192.83	40.71	34.50	6.21	-0.37
0	167.22	35.30	34.50	0.80	**0.00**
1	148.14	31.28	34.50	-3.22	-0.19
2	133.33	28.15	34.50	-6.35	-0.76

Storage (m^3)				
Overflow	Required	Surface	Sub-surface	Balance
0.00	0.00	8.95	0	0.00

overflows to: offsite

Stormwater Management Summary Table				
Drainage Area	**ICD Restricted Flow (L/s)**	**100 Year Storage Required (m3)**	**2 Yr Storage Required (m3)**	**Storage Provided**
ROOF A	3.00	104.27	31.23	106.88
ROOF B	3.00	104.27	31.23	106.88
LINK	2.00	15.34	3.85	22.50
CB108	4.50	94.11	24.36	94.95
CBMH104	6.50	93.38	23.42	94.42
CICB100B	34.50	8.86	0.00	8.95
TOTAL	**53.50**	**420.22**	**114.07**	**434.57**

8201 CAMPEAU DRIVE
RUNOFF COEFFICIENT CALCULATION SHEET

RESTRICTED *Ha*

ROOF A1	Area (m^2)	C	
Softscape	0.00	0.20	
Hardscape	1414.26	0.90	
Total	1414.26	**0.90**	0.14

ROOF A2	Area (m^2)	C	
Softscape	0.00	0.20	
Hardscape	986.47	0.90	
Total	986.47	**0.90**	0.10

LINK	Area (m^2)	C	
Softscape	0.00	0.20	
Hardscape	385.22	0.90	
Total	385.22	**0.90**	0.04

ROOF B1	Area (m^2)	C	
Softscape	0.00	0.20	
Hardscape	960.53	0.90	
Total	960.53	**0.90**	0.10

ROOF B2	Area (m^2)	C	
Softscape	0.00	0.20	
Hardscape	878.19	0.90	
Total	878.19	**0.90**	0.09

CICB100A	Area (m^2)	C	
Softscape	82.97	0.20	
Hardscape	142.75	0.90	
Total	225.72	**0.64**	0.02

CICB100B	Area (m^2)	C	
Softscape	249.40	0.20	
Hardscape	625.47	0.90	
Total	874.87	**0.70**	0.09

CBMH104	Area (m^2)	C	
Softscape	155.31	0.20	
Hardscape	358.90	0.90	
Total	514.21	**0.69**	0.05

CB106	Area (m^2)	C	
Softscape	438.95	0.20	
Hardscape	497.60	0.90	
Total	936.55	**0.57**	0.09

GROUPED DRAINAGE AREAS *Ha*

CBMH104	Area (m^2)	C	
CB106	936.6	0.57	
CB105	730.2	0.72	
CBMH104	514.2	0.69	
Total	2181.0	**0.65**	0.22

CICB100B	Area (m^2)	C	
CICB100A	225.7	0.64	
CICB100B	874.9	0.70	
Total	1100.6	**0.69**	0.11

Total area (m^2) =	12424.67
Total area (ha) =	1.24

CB105	Area (m^2)	C	
Softscape	190.53	0.20	
Hardscape	539.67	0.90	
Total	730.20	**0.72**	0.07

CB108	Area (m^2)	C	
Softscape	928.89	0.20	
Hardscape	1242.64	0.90	
Total	2171.53	**0.60**	0.22

UNC1	Area (m^2)	C	
Softscape	268.69	0.20	
Hardscape	585.95	0.90	
Total	854.64	**0.68**	0.09

UNC2	Area (m^2)	C	
Softscape	214.26	0.20	
Hardscape	1278.02	0.90	
Total	1492.28	**0.80**	0.15

5.8 WATER BALANCE

The Carp River Watershed/Subwatershed study listed infiltration rates ranging from 262 mm/yr to 73 mm/yr in areas of high and low recharge, respectively. Detailed geotechnical work completed for the Kanata West Master Servicing study and the Fairwinds Subdivision modified these rates to 100 mm/yr and 50 mm/yr respectively for lands within the Kanata West Development, as provided on **Figure 5.4** (excerpt from KWMSS). The Taggart-Loblaws Subdivision is identified as having an estimated infiltration rate between 50-70mm/yr. Infiltration requirements were established to provide base flow to the Carp River in post-development conditions.

Development sites within the subdivision are required to include infiltration measures in order to meet the upper limit infiltration rate of 70mm/year as indicated in the KWMSS.

The soils within the Taggart-Loblaws property were described by JD Paterson and Assoc. Ltd. to be topsoil overlying silty sand and clayey silt, overlaying marine clay. As discussed in the report "*Supplemental Geotechnical Investigation, Proposed Commercial Development Campeau Drive Extension, Ottawa, Ontario*" (Paterson, October 28th, 2014), the 70mm/yr infiltration target was determined to be suitable for the subject site.

5.8.1 Pre-Development Infiltration

Pre-development infiltration rates were determined based on the KWMSS requirement of 50-70mm/year over the site area. The upper limit of 70mm/year was used to ensure sufficient infiltration over the site. Therefore, at 70mm/year over the entire 2.3 ha site area, the resulting total pre-development infiltration rate is 1,610 m^3/year.

5.8.2 Post-Development Infiltration

In the Kanata West Master Servicing Study the criteria for infiltration is presented as follows:

"Post development infiltration rates are to be increased by 25 percent above the pre-development rate. This rate of infiltration has been established to compensate for those areas (ie. Roadway corridors) that cannot (sic) provide infiltration."

Applying the 25% increase to the pre-development infiltration rate results in a required post-development infiltration rate of 2,013 m^3/year. However, approximately 15% (0.35 ha) of the post development site area will be pervious grassed surfaces. Assuming that the infiltration rate on these pervious surfaces is no less than 70mm/year, the total infiltration of this area would be at least 242 m^3/year. The remaining infiltration to be provided on-site is therefore, 1771 m^3/year.

Due to the impermeable nature of the marine clay throughout most of the, infiltration galleries are proposed within the shallow silty sand overburden above the top of the clay layer. It is proposed to direct the roof drain lead from the Brick/Unit 1/ Lazy-boy building to two infiltration galleries located below the parking stalls in the parking lot. The proposed infiltration galleries are sized to accommodate the 25mm event runoff from the roof.

The infiltration galleries will be wrapped in woven geotextile to reduce the migration of fine particles. An overflow connection to the storm sewer is proposed to allow runoff to drain to the storm sewer once the infiltration galleries reach capacity. Details for the infiltration gallery configuration are included on **Drawing SSP-1 and DS-1** and detailed infiltration calculations are provided in **Appendix C.** Borehole logs from Paterson's December 2002 geotechnical investigation report are also included in **Appendix D.**

Rainfall data from Environment Canada for 2009-2011 was used to estimate the average total annual rainfall depth for rainfall events between 6mm and 25mm. Applying this rainfall depth over the total roof area results in a roof runoff rate of 2398 m^3/year that will be directed to the infiltration galleries. Therefore, the infiltration targets of 1771 m^3/year will be met with the proposed infiltration galleries.

SUMMARY OF INFILTRATION GALLERY CALCULATIONS
AVERAGE SILTY CLAY PERCOLATION RATE

annual precipitation (mm)	920
60% available runoff (mm)	552
area (ha)	1.24

								Infiltration Gallery Overflow (%)			Overflow Volume (m^3)			Infiltration Volume (m^3)		
Building ID	Area (m^2)	Available Runoff Volume (m^3)	Gallery ID	Width (m)	Length (m)	Area (m2)	Depth (m)	WET YEAR	DRY YEAR	AVERAGE	WET YEAR	DRY YEAR	AVERAGE	WET YEAR	DRY YEAR	AVERAGE
Roof	2200	1214	1	4	34.4	137.6	0.81	5.00%	31.02%	18.01%	61	377	219	1154	838	996
TOTAL		1214											219			996

AVERAGE INFILTRATION RATE	80.30
REQUIRED INFILTRATION RATE	70

INFILTRATION GALLERY SIZING CALCULATION
WET YEAR CALCULATION

Structure	2200	m^2	PRECIPITATION DATA APRIL 1 TO OCTOBER 31 (WET YEAR)		
Effective Runoff	0.6	%	TOT PRECIP DEPTH	800.4	mm
Percolation	0.3495	(m/day, avg silty clay)	TOTAL PRECIP VOLUME	1056	m3
INFILTRATION GALLERY SIZING					
Width	4	m	DEVELOPMENT AREA	1.24	ha
Length	34.4	m			
depth	0.81	m	OVERFLOW VOL	53	m3/year
Number Cells	1				
void ratio	0.38		RUNOFF VOLUME OVERFLOW	5.00%	
	42.35328	TOTAL DRYCELL VOL			

DATE	RAINFALL	RAINFALL INTENSITY (AVG)	RAINWATER AVAILABLE	VOLUME INFLOW TO DRYCELL	VOLUME IN DRY CELL	VOLUME PASSING DRY CELL	INFILTRATION FROM BOTTOM	INFILTRATION FROM SIDES (BOTTOM 1/3)	BALANCE IN DRYCELL
	[MM]	[MM/HR]	[M^3]	[M^3]	[M^3]	[M^3]	[M^3]	[M^3]	[M^3]
01-Apr	0.2	0.008	0	0	0	0	0	0	0
02-Apr	0.4	0.017	1	1	1	0	1	0	0
03-Apr	0	0.000	0	0	0	0	0	0	0
04-Apr	0	0.000	0	0	0	0	0	0	0
05-Apr	0	0.000	0	0	0	0	0	0	0
06-Apr	7.8	0.325	10	10	10	0	10	0	0
07-Apr	3.4	0.142	4	4	4	0	4	0	0
08-Apr	4.6	0.192	6	6	6	0	6	0	0
09-Apr	4.2	0.175	6	6	6	0	6	0	0
10-Apr	0	0.000	0	0	0	0	0	0	0
11-Apr	0	0.000	0	0	0	0	0	0	0
12-Apr	0	0.000	0	0	0	0	0	0	0
13-Apr	0	0.000	0	0	0	0	0	0	0
14-Apr	0	0.000	0	0	0	0	0	0	0
15-Apr	0	0.000	0	0	0	0	0	0	0
16-Apr	0	0.000	0	0	0	0	0	0	0
17-Apr	0	0.000	0	0	0	0	0	0	0
18-Apr	0	0.000	0	0	0	0	0	0	0
19-Apr	0	0.000	0	0	0	0	0	0	0
20-Apr	8.2	0.342	11	11	11	0	11	0	0
21-Apr	2.8	0.117	4	4	4	0	4	0	0
22-Apr	0	0.000	0	0	0	0	0	0	0
23-Apr	0	0.000	0	0	0	0	0	0	0
24-Apr	0	0.000	0	0	0	0	0	0	0
25-Apr	0	0.000	0	0	0	0	0	0	0
26-Apr	0	0.000	0	0	0	0	0	0	0
27-Apr	0	0.000	0	0	0	0	0	0	0
28-Apr	0	0.000	0	0	0	0	0	0	0
29-Apr	0	0.000	0	0	0	0	0	0	0
30-Apr	0	0.000	0	0	0	0	0	0	0
01-May	9	0.375	12	12	12	0	12	0	0
02-May	0	0.000	0	0	0	0	0	0	0
03-May	0	0.000	0	0	0	0	0	0	0
04-May	2.4	0.100	3	3	3	0	3	0	0
05-May	8	0.333	11	11	11	0	11	0	0
06-May	1	0.042	1	1	1	0	1	0	0
07-May	1.6	0.067	2	2	2	0	2	0	0
08-May	0.8	0.033	1	1	1	0	1	0	0
09-May	0	0.000	0	0	0	0	0	0	0
10-May	0	0.000	0	0	0	0	0	0	0
11-May	0	0.000	0	0	0	0	0	0	0
12-May	0	0.000	0	0	0	0	0	0	0
13-May	0	0.000	0	0	0	0	0	0	0
14-May	0	0.000	0	0	0	0	0	0	0
15-May	1	0.042	1	1	1	0	1	0	0
16-May	17.4	0.725	23	23	23	0	23	0	0
17-May	0	0.000	0	0	0	0	0	0	0
18-May	11	0.458	15	15	15	0	15	0	0
19-May	30.2	1.258	40	40	40	0	40	0	0
20-May	29.4	1.225	39	39	39	0	39	0	0
21-May	5.9	0.246	8	8	8	0	8	0	0
22-May	26.9	1.121	36	36	36	0	36	0	0
23-May	11.3	0.471	15	15	15	0	15	0	0
24-May	0.4	0.017	1	1	1	0	1	0	0
25-May	0	0.000	0	0	0	0	0	0	0
26-May	0	0.000	0	0	0	0	0	0	0
27-May	7.8	0.325	10	10	10	0	10	0	0
28-May	0	0.000	0	0	0	0	0	0	0
29-May	0	0.000	0	0	0	0	0	0	0
30-May	0	0.000	0	0	0	0	0	0	0
31-May	0	0.000	0	0	0	0	0	0	0
01-Jun	10.6	0.442	14	14	14	0	14	0	0
02-Jun	0	0.000	0	0	0	0	0	0	0
03-Jun	0	0.000	0	0	0	0	0	0	0
04-Jun	0	0.000	0	0	0	0	0	0	0
05-Jun	1.4	0.058	2	2	2	0	2	0	0
06-Jun	0	0.000	0	0	0	0	0	0	0
07-Jun	5	0.208	7	7	7	0	7	0	0
08-Jun	0.2	0.008	0	0	0	0	0	0	0
09-Jun	0	0.000	0	0	0	0	0	0	0
10-Jun	0	0.000	0	0	0	0	0	0	0
11-Jun	4.8	0.200	6	6	6	0	6	0	0
12-Jun	26.2	1.092	35	35	35	0	35	0	0
13-Jun	1	0.042	1	1	1	0	1	0	0
14-Jun	0	0.000	0	0	0	0	0	0	0
15-Jun	0	0.000	0	0	0	0	0	0	0
16-Jun	5.6	0.233	7	7	7	0	7	0	0
17-Jun	0	0.000	0	0	0	0	0	0	0
18-Jun	0	0.000	0	0	0	0	0	0	0
19-Jun	4	0.167	5	5	5	0	5	0	0
20-Jun	0	0.000	0	0	0	0	0	0	0
21-Jun	0	0.000	0	0	0	0	0	0	0
22-Jun	0	0.000	0	0	0	0	0	0	0
23-Jun	1	0.042	1	1	1	0	1	0	0
24-Jun	27.2	1.133	36	36	36	0	36	0	0
25-Jun	0	0.000	0	0	0	0	0	0	0
26-Jun	0	0.000	0	0	0	0	0	0	0
27-Jun	29	1.208	38	38	38	0	38	0	0
28-Jun	0	0.000	0	0	0	0	0	0	0
29-Jun	0.2	0.008	0	0	0	0	0	0	0
30-Jun	0	0.000	0	0	0	0	0	0	0
01-Jul	0	0.000	0	0	0	0	0	0	0
02-Jul	10	0.417	13	13	13	0	13	0	0
03-Jul	14.8	0.617	20	20	20	0	20	0	0
04-Jul	7.6	0.317	10	10	10	0	10	0	0
05-Jul	14.8	0.617	20	20	20	0	20	0	0
06-Jul	0	0.000	0	0	0	0	0	0	0
07-Jul	0	0.000	0	0	0	0	0	0	0

08-Jul	0	0.000	0	0	0	0	0	0	0
09-Jul	0	0.000	0	0	0	0	0	0	0
10-Jul	0	0.000	0	0	0	0	0	0	0
11-Jul	0	0.000	0	0	0	0	0	0	0
12-Jul	0	0.000	0	0	0	0	0	0	0
13-Jul	10.6	0.442	14	14	14	0	14	0	0
14-Jul	0.4	0.017	1	1	1	0	1	0	0
15-Jul	0	0.000	0	0	0	0	0	0	0
16-Jul	0	0.000	0	0	0	0	0	0	0
17-Jul	0	0.000	0	0	0	0	0	0	0
18-Jul	0	0.000	0	0	0	0	0	0	0
19-Jul	0	0.000	0	0	0	0	0	0	0
20-Jul	6.2	0.258	8	8	8	0	8	0	0
21-Jul	0	0.000	0	0	0	0	0	0	0
22-Jul	0	0.000	0	0	0	0	0	0	0
23-Jul	0	0.000	0	0	0	0	0	0	0
24-Jul	0	0.000	0	0	0	0	0	0	0
25-Jul	3.6	0.150	5	5	5	0	5	0	0
26-Jul	31.6	1.317	42	42	42	0	42	0	0
27-Jul	0	0.000	0	0	0	0	0	0	0
28-Jul	0	0.000	0	0	0	0	0	0	0
29-Jul	42.4	1.767	56	42	42	14	42	0	0
30-Jul	2.4	0.100	3	3	3	0	3	0	0
31-Jul	0	0.000	0	0	0	0	0	0	0
01-Aug	0.6	0.025	1	1	1	0	1	0	0
02-Aug	10.8	0.450	14	14	14	0	14	0	0
03-Aug	0	0.000	0	0	0	0	0	0	0
04-Aug	0	0.000	0	0	0	0	0	0	0
05-Aug	0.4	0.017	1	1	1	0	1	0	0
06-Aug	4	0.167	5	5	5	0	5	0	0
07-Aug	1.2	0.050	2	2	2	0	2	0	0
08-Aug	2.8	0.117	4	4	4	0	4	0	0
09-Aug	11	0.458	15	15	15	0	15	0	0
10-Aug	0	0.000	0	0	0	0	0	0	0
11-Aug	0	0.000	0	0	0	0	0	0	0
12-Aug	0	0.000	0	0	0	0	0	0	0
13-Aug	0	0.000	0	0	0	0	0	0	0
14-Aug	0	0.000	0	0	0	0	0	0	0
15-Aug	2	0.083	3	3	3	0	3	0	0
16-Aug	0	0.000	0	0	0	0	0	0	0
17-Aug	0	0.000	0	0	0	0	0	0	0
18-Aug	14.2	0.592	19	19	19	0	19	0	0
19-Aug	0	0.000	0	0	0	0	0	0	0
20-Aug	0	0.000	0	0	0	0	0	0	0
21-Aug	15.6	0.650	21	21	21	0	21	0	0
22-Aug	0	0.000	0	0	0	0	0	0	0
23-Aug	6.6	0.275	9	9	9	0	9	0	0
24-Aug	0.8	0.033	1	1	1	0	1	0	0
25-Aug	0	0.000	0	0	0	0	0	0	0
26-Aug	3.8	0.158	5	5	5	0	5	0	0
27-Aug	24.2	1.008	32	32	32	0	32	0	0
28-Aug	0.8	0.033	1	1	1	0	1	0	0
29-Aug	0	0.000	0	0	0	0	0	0	0
30-Aug	0	0.000	0	0	0	0	0	0	0
31-Aug	0	0.000	0	0	0	0	0	0	0
01-Sep	0	0.000	0	0	0	0	0	0	0
02-Sep	0.4	0.017	1	1	1	0	1	0	0
03-Sep	0	0.000	0	0	0	0	0	0	0
04-Sep	1.9	0.079	3	3	3	0	3	0	0
05-Sep	5.8	0.242	8	8	8	0	8	0	0
06-Sep	0	0.000	0	0	0	0	0	0	0
07-Sep	0	0.000	0	0	0	0	0	0	0
08-Sep	0	0.000	0	0	0	0	0	0	0
09-Sep	0	0.000	0	0	0	0	0	0	0
10-Sep	6.4	0.267	8	8	8	0	8	0	0
11-Sep	61.8	2.575	82	42	42	39	42	0	0
12-Sep	20.6	0.858	27	27	27	0	27	0	0
13-Sep	5.8	0.242	8	8	8	0	8	0	0
14-Sep	0	0.000	0	0	0	0	0	0	0
15-Sep	8.1	0.338	11	11	11	0	11	0	0
16-Sep	2.3	0.096	3	3	3	0	3	0	0
17-Sep	0	0.000	0	0	0	0	0	0	0
18-Sep	0	0.000	0	0	0	0	0	0	0
19-Sep	0	0.000	0	0	0	0	0	0	0
20-Sep	0.8	0.033	1	1	1	0	1	0	0
21-Sep	0	0.000	0	0	0	0	0	0	0
22-Sep	0	0.000	0	0	0	0	0	0	0
23-Sep	13	0.542	17	17	17	0	17	0	0
24-Sep	0	0.000	0	0	0	0	0	0	0
25-Sep	0	0.000	0	0	0	0	0	0	0
26-Sep	0	0.000	0	0	0	0	0	0	0
27-Sep	0	0.000	0	0	0	0	0	0	0
28-Sep	1.3	0.054	2	2	2	0	2	0	0
29-Sep	14.1	0.588	19	19	19	0	19	0	0
30-Sep	25.2	1.050	33	33	33	0	33	0	0
01-Oct	0	0.000	0	0	0	0	0	0	0
02-Oct	0.4	0.017	1	1	1	0	1	0	0
03-Oct	7.8	0.325	10	10	10	0	10	0	0
04-Oct	7.8	0.325	10	10	10	0	10	0	0
05-Oct	6	0.250	8	8	8	0	8	0	0
06-Oct	0.4	0.017	1	1	1	0	1	0	0
07-Oct	0	0.000	0	0	0	0	0	0	0
08-Oct	1	0.042	1	1	1	0	1	0	0
09-Oct	1.2	0.050	2	2	2	0	2	0	0
10-Oct	0	0.000	0	0	0	0	0	0	0
11-Oct	0	0.000	0	0	0	0	0	0	0
12-Oct	0	0.000	0	0	0	0	0	0	0
13-Oct	10.4	0.433	14	14	14	0	14	0	0
14-Oct	9	0.375	12	12	12	0	12	0	0
15-Oct	0	0.000	0	0	0	0	0	0	0
16-Oct	0.2	0.008	0	0	0	0	0	0	0
17-Oct	1.6	0.067	2	2	2	0	2	0	0
18-Oct	0	0.000	0	0	0	0	0	0	0
19-Oct	0	0.000	0	0	0	0	0	0	0
20-Oct	0	0.000	0	0	0	0	0	0	0
21-Oct	5.8	0.242	8	8	8	0	8	0	0
22-Oct	0	0.000	0	0	0	0	0	0	0
23-Oct	1	0.042	1	1	1	0	1	0	0
24-Oct	0	0.000	0	0	0	0	0	0	0
25-Oct	0	0.000	0	0	0	0	0	0	0
26-Oct	1.3	0.054	2	2	2	0	2	0	0
27-Oct	10.9	0.454	14	14	14	0	14	0	0
28-Oct	0	0.000	0	0	0	0	0	0	0
29-Oct	13	0.542	17	17	17	0	17	0	0
30-Oct	0	0.000	0	0	0	0	0	0	0
31-Oct	0	0.000	0	0	0	0	0	0	0

INFILTRATION GALLERY SIZING CALCULATION
DRY YEAR CALCULATION

Roof	2200	m^2	PRECIPITATION DATA APRIL 1 TO OCTOBER 31 (DRY YEAR)		
Effective Runoff	0.6	%	TOT PRECIP DEPTH	405.1	mm
Percolation	0.3495	(m/day, avg silty clay)	TOTAL PRECIP VOLUME	535	m3
INFILTRATION GALLERY SIZING					
Width	4	m	DEVELOPMENT AREA	1.24	ha
Length	34.4	m			
depth	0.15	m	OVERFLOW VOL	166	m3/year
Number Cells	1				
void ratio	0.38		RUNOFF VOLUME OVERFLOW	31.02%	
	7.8432	TOTAL DRYCELL VOL			

DATE	RAINFALL	RAINFALL INTENSITY (AVG)	RAINWATER AVAILABLE	VOLUME INFLOW TO DRYCELL	VOLUME IN DRY CELL	VOLUME PASSING DRY CELL	INFILTRATION FROM BOTTOM	INFILTRATION FROM SIDES (BOTTOM 1/3)	BALANCE IN DRYCELL
	[MM]	[MM/HR]	[M^3]	[M^3]	[M^3]	[M^3]	[M^3]	[M^3]	[M^3]
01-Apr	0	0.000	0	0	0	0	0	0	0
02-Apr	0	0.000	0	0	0	0	0	0	0
03-Apr	0	0.000	0	0	0	0	0	0	0
04-Apr	15	0.625	20	8	8	12	8	0	0
05-Apr	0	0.000	0	0	0	0	0	0	0
06-Apr	0	0.000	0	0	0	0	0	0	0
07-Apr	0.3	0.013	0	0	0	0	0	0	0
08-Apr	0	0.000	0	0	0	0	0	0	0
09-Apr	0	0.000	0	0	0	0	0	0	0
10-Apr	0	0.000	0	0	0	0	0	0	0
11-Apr	0	0.000	0	0	0	0	0	0	0
12-Apr	1	0.042	1	1	1	0	1	0	0
13-Apr	1.6	0.067	2	2	2	0	2	0	0
14-Apr	5.9	0.246	8	8	8	0	8	0	0
15-Apr	2.3	0.096	3	3	3	0	3	0	0
16-Apr	0	0.000	0	0	0	0	0	0	0
17-Apr	0	0.000	0	0	0	0	0	0	0
18-Apr	0	0.000	0	0	0	0	0	0	0
19-Apr	0	0.000	0	0	0	0	0	0	0
20-Apr	0	0.000	0	0	0	0	0	0	0
21-Apr	0	0.000	0	0	0	0	0	0	0
22-Apr	6.9	0.288	9	8	8	1	8	0	0
23-Apr	4.8	0.200	6	6	6	0	6	0	0
24-Apr	0.3	0.013	0	0	0	0	0	0	0
25-Apr	0	0.000	0	0	0	0	0	0	0
26-Apr	0	0.000	0	0	0	0	0	0	0
27-Apr	0	0.000	0	0	0	0	0	0	0
28-Apr	0	0.000	0	0	0	0	0	0	0
29-Apr	10.8	0.450	14	8	8	6	8	0	0
30-Apr	1.6	0.067	2	2	2	0	2	0	0
01-May	3.8	0.158	5	5	5	0	5	0	0
02-May	0	0.000	0	0	0	0	0	0	0
03-May	11.3	0.471	15	8	8	7	8	0	0
04-May	0	0.000	0	0	0	0	0	0	0
05-May	0	0.000	0	0	0	0	0	0	0
06-May	4.1	0.171	5	5	5	0	5	0	0
07-May	3	0.125	4	4	4	0	4	0	0
08-May	0	0.000	0	0	0	0	0	0	0
09-May	23.4	0.975	31	8	8	23	8	0	0
10-May	0.5	0.021	1	1	1	0	1	0	0
11-May	0	0.000	0	0	0	0	0	0	0
12-May	22.3	0.929	29	8	8	22	8	0	0
13-May	0	0.000	0	0	0	0	0	0	0
14-May	0	0.000	0	0	0	0	0	0	0
15-May	2.3	0.096	3	3	3	0	3	0	0
16-May	0.3	0.013	0	0	0	0	0	0	0
17-May	0	0.000	0	0	0	0	0	0	0
18-May	0	0.000	0	0	0	0	0	0	0
19-May	0	0.000	0	0	0	0	0	0	0
20-May	0	0.000	0	0	0	0	0	0	0
21-May	0	0.000	0	0	0	0	0	0	0
22-May	8.4	0.350	11	8	8	3	8	0	0
23-May	10	0.417	13	8	8	5	8	0	0
24-May	3.4	0.142	4	4	4	0	4	0	0
25-May	6.2	0.258	8	8	8	0	8	0	0
26-May	1.9	0.079	3	3	3	0	3	0	0
27-May	0.3	0.013	0	0	0	0	0	0	0
28-May	1.3	0.054	2	2	2	0	2	0	0
29-May	1.1	0.046	1	1	1	0	1	0	0
30-May	0	0.000	0	0	0	0	0	0	0
31-May	10.9	0.454	14	8	8	7	8	0	0
01-Jun	0	0.000	0	0	0	0	0	0	0
02-Jun	0.5	0.021	1	1	1	0	1	0	0
03-Jun	0	0.000	0	0	0	0	0	0	0
04-Jun	0	0.000	0	0	0	0	0	0	0
05-Jun	0	0.000	0	0	0	0	0	0	0
06-Jun	0	0.000	0	0	0	0	0	0	0
07-Jun	0	0.000	0	0	0	0	0	0	0
08-Jun	0	0.000	0	0	0	0	0	0	0
09-Jun	0	0.000	0	0	0	0	0	0	0
10-Jun	0	0.000	0	0	0	0	0	0	0
11-Jun	0	0.000	0	0	0	0	0	0	0
12-Jun	0.3	0.013	0	0	0	0	0	0	0
13-Jun	12.2	0.508	16	8	8	8	8	0	0
14-Jun	0.3	0.013	0	0	0	0	0	0	0
15-Jun	1.3	0.054	2	2	2	0	2	0	0
16-Jun	11.8	0.492	16	8	8	8	8	0	0
17-Jun	6.4	0.267	8	8	8	1	8	0	0
18-Jun	0.8	0.033	1	1	1	0	1	0	0
19-Jun	0	0.000	0	0	0	0	0	0	0
20-Jun	5.2	0.217	7	7	7	0	7	0	0
21-Jun	3.2	0.133	4	4	4	0	4	0	0
22-Jun	0	0.000	0	0	0	0	0	0	0
23-Jun	0	0.000	0	0	0	0	0	0	0
24-Jun	0.3	0.013	0	0	0	0	0	0	0
25-Jun	0	0.000	0	0	0	0	0	0	0
26-Jun	0	0.000	0	0	0	0	0	0	0
27-Jun	0	0.000	0	0	0	0	0	0	0
28-Jun	0	0.000	0	0	0	0	0	0	0
29-Jun	0	0.000	0	0	0	0	0	0	0
30-Jun	1.1	0.046	1	1	1	0	1	0	0
01-Jul	0.5	0.021	1	1	1	0	1	0	0
02-Jul	6.1	0.254	8	8	8	0	8	0	0
03-Jul	0	0.000	0	0	0	0	0	0	0
04-Jul	6.4	0.267	8	8	8	1	8	0	0
05-Jul	0.8	0.033	1	1	1	0	1	0	0
06-Jul	0	0.000	0	0	0	0	0	0	0
07-Jul	0	0.000	0	0	0	0	0	0	0

08-Jul	0	0.000	0	0	0	0	0	0	0
09-Jul	6.7	0.279	9	8	8	1	8	0	0
10-Jul	0	0.000	0	0	0	0	0	0	0
11-Jul	0	0.000	0	0	0	0	0	0	0
12-Jul	0	0.000	0	0	0	0	0	0	0
13-Jul	0	0.000	0	0	0	0	0	0	0
14-Jul	0	0.000	0	0	0	0	0	0	0
15-Jul	0	0.000	0	0	0	0	0	0	0
16-Jul	0	0.000	0	0	0	0	0	0	0
17-Jul	0	0.000	0	0	0	0	0	0	0
18-Jul	20.9	0.871	28	8	8	20	8	0	0
19-Jul	11.5	0.479	15	8	8	7	8	0	0
20-Jul	0	0.000	0	0	0	0	0	0	0
21-Jul	0	0.000	0	0	0	0	0	0	0
22-Jul	0	0.000	0	0	0	0	0	0	0
23-Jul	6.9	0.288	9	8	8	1	8	0	0
24-Jul	9.2	0.383	12	8	8	4	8	0	0
25-Jul	0	0.000	0	0	0	0	0	0	0
26-Jul	0.3	0.013	0	0	0	0	0	0	0
27-Jul	1.3	0.054	2	2	2	0	2	0	0
28-Jul	0	0.000	0	0	0	0	0	0	0
29-Jul	1.1	0.046	1	1	1	0	1	0	0
30-Jul	0.3	0.013	0	0	0	0	0	0	0
31-Jul	4.1	0.171	5	5	5	0	5	0	0
01-Aug	0	0.000	0	0	0	0	0	0	0
02-Aug	8.9	0.371	12	8	8	4	8	0	0
03-Aug	11.5	0.479	15	8	8	7	8	0	0
04-Aug	0.8	0.033	1	1	1	0	1	0	0
05-Aug	0	0.000	0	0	0	0	0	0	0
06-Aug	0	0.000	0	0	0	0	0	0	0
07-Aug	0	0.000	0	0	0	0	0	0	0
08-Aug	0.8	0.033	1	1	1	0	1	0	0
09-Aug	0	0.000	0	0	0	0	0	0	0
10-Aug	0	0.000	0	0	0	0	0	0	0
11-Aug	0	0.000	0	0	0	0	0	0	0
12-Aug	1.3	0.054	2	2	2	0	2	0	0
13-Aug	0	0.000	0	0	0	0	0	0	0
14-Aug	0	0.000	0	0	0	0	0	0	0
15-Aug	0	0.000	0	0	0	0	0	0	0
16-Aug	0	0.000	0	0	0	0	0	0	0
17-Aug	0.6	0.025	1	1	1	0	1	0	0
18-Aug	0	0.000	0	0	0	0	0	0	0
19-Aug	5.5	0.229	7	7	7	0	7	0	0
20-Aug	0	0.000	0	0	0	0	0	0	0
21-Aug	0	0.000	0	0	0	0	0	0	0
22-Aug	0	0.000	0	0	0	0	0	0	0
23-Aug	0.8	0.033	1	1	1	0	1	0	0
24-Aug	0	0.000	0	0	0	0	0	0	0
25-Aug	0	0.000	0	0	0	0	0	0	0
26-Aug	0	0.000	0	0	0	0	0	0	0
27-Aug	3.3	0.138	4	4	4	0	4	0	0
28-Aug	0	0.000	0	0	0	0	0	0	0
29-Aug	0	0.000	0	0	0	0	0	0	0
30-Aug	0	0.000	0	0	0	0	0	0	0
31-Aug	0.8	0.033	1	1	1	0	1	0	0
01-Sep	0	0.000	0	0	0	0	0	0	0
02-Sep	0.9	0.038	1	1	1	0	1	0	0
03-Sep	8.4	0.350	11	8	8	3	8	0	0
04-Sep	0	0.000	0	0	0	0	0	0	0
05-Sep	0	0.000	0	0	0	0	0	0	0
06-Sep	0	0.000	0	0	0	0	0	0	0
07-Sep	0	0.000	0	0	0	0	0	0	0
08-Sep	0	0.000	0	0	0	0	0	0	0
09-Sep	0.6	0.025	1	1	1	0	1	0	0
10-Sep	4.4	0.183	6	6	6	0	6	0	0
11-Sep	0	0.000	0	0	0	0	0	0	0
12-Sep	3.5	0.146	5	5	5	0	5	0	0
13-Sep	11.7	0.488	15	8	8	8	8	0	0
14-Sep	0	0.000	0	0	0	0	0	0	0
15-Sep	0	0.000	0	0	0	0	0	0	0
16-Sep	0	0.000	0	0	0	0	0	0	0
17-Sep	1.1	0.046	1	1	1	0	1	0	0
18-Sep	0	0.000	0	0	0	0	0	0	0
19-Sep	0	0.000	0	0	0	0	0	0	0
20-Sep	3.1	0.129	4	4	4	0	4	0	0
21-Sep	1.4	0.058	2	2	2	0	2	0	0
22-Sep	0.6	0.025	1	1	1	0	1	0	0
23-Sep	0	0.000	0	0	0	0	0	0	0
24-Sep	0	0.000	0	0	0	0	0	0	0
25-Sep	4.9	0.204	6	6	6	0	6	0	0
26-Sep	0.3	0.013	0	0	0	0	0	0	0
27-Sep	0	0.000	0	0	0	0	0	0	0
28-Sep	3.9	0.163	5	5	5	0	5	0	0
29-Sep	2.1	0.088	3	3	3	0	3	0	0
30-Sep	0	0.000	0	0	0	0	0	0	0
01-Oct	0	0.000	0	0	0	0	0	0	0
02-Oct	4.5	0.188	6	6	6	0	6	0	0
03-Oct	0	0.000	0	0	0	0	0	0	0
04-Oct	0	0.000	0	0	0	0	0	0	0
05-Oct	0	0.000	0	0	0	0	0	0	0
06-Oct	0	0.000	0	0	0	0	0	0	0
07-Oct	3	0.125	4	4	4	0	4	0	0
08-Oct	0	0.000	0	0	0	0	0	0	0
09-Oct	0	0.000	0	0	0	0	0	0	0
10-Oct	2	0.083	3	3	3	0	3	0	0
11-Oct	0	0.000	0	0	0	0	0	0	0
12-Oct	1.8	0.075	2	2	2	0	2	0	0
13-Oct	0	0.000	0	0	0	0	0	0	0
14-Oct	8.9	0.371	12	8	8	4	8	0	0
15-Oct	0	0.000	0	0	0	0	0	0	0
16-Oct	0	0.000	0	0	0	0	0	0	0
17-Oct	6.8	0.283	9	8	8	1	8	0	0
18-Oct	0	0.000	0	0	0	0	0	0	0
19-Oct	0	0.000	0	0	0	0	0	0	0
20-Oct	0	0.000	0	0	0	0	0	0	0
21-Oct	0	0.000	0	0	0	0	0	0	0
22-Oct	0	0.000	0	0	0	0	0	0	0
23-Oct	0	0.000	0	0	0	0	0	0	0
24-Oct	0	0.000	0	0	0	0	0	0	0
25-Oct	6.6	0.275	9	8	8	1	8	0	0
26-Oct	0	0.000	0	0	0	0	0	0	0
27-Oct	0	0.000	0	0	0	0	0	0	0
28-Oct	0	0.000	0	0	0	0	0	0	0
29-Oct	0	0.000	0	0	0	0	0	0	0
30-Oct	5.5	0.229	7	7	7	0	7	0	0
31-Oct	0.3	0.013	0	0	0	0	0	0	0

INFILTRATION SYSTEM

EZstorm system overview

Project details :

Project description :	Campeau
Date :	7/16/2025
Location :	Ottawa, ON

Client details :

Contact:	
E-mail :	

EZstorm configuration	
EZstorm application	Infiltration
Load type	Heavy traffic
Height	0.66 m
Length	34.40 m
Width	4.00 m
EZstorm storage volume	87.18 m³
Total storage volume	87.18 m³

Fill materiel	
Fill materiel	3/4" clear stone
Storage in stone	No
Stone porosity	-
Stone above system	-
Perimeter stone	-
Stone below system	-
Storage in stone	-

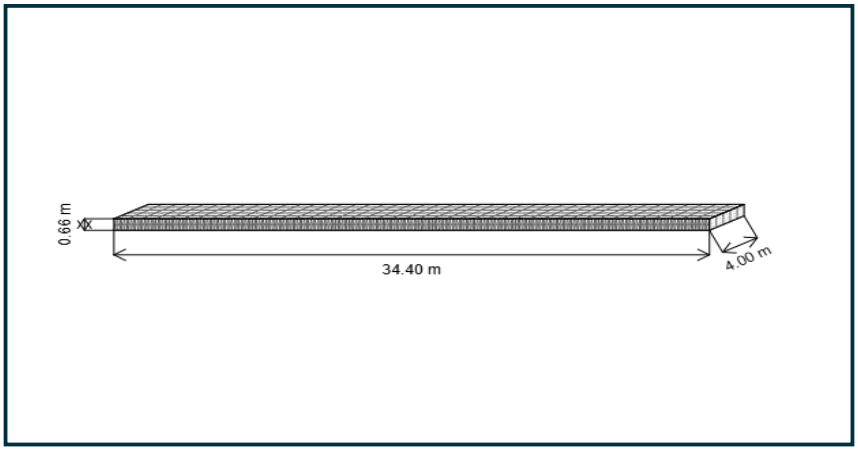

Summary

Total storage volume provided :	87.18 m³
EZstorm storage volume	87.18 m³
Storage in stone	-
Stone quantity (fill) required for this project :	67.35 m³

INFILTRATION SYSTEM

EZstorm system accessories

- Inlet
- Inlet with HDS
- Outlet
- Inspection port
- Pretreatment row
- EZaccess manhole

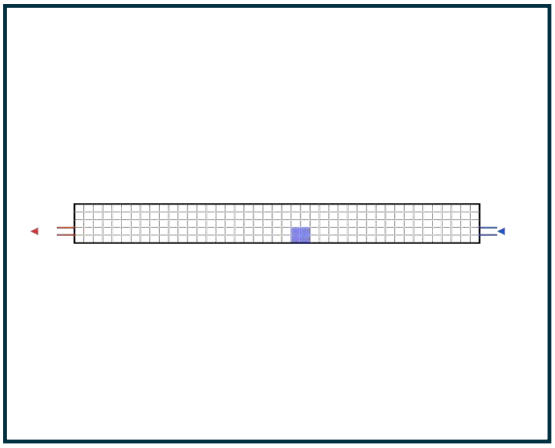

Material list

EZstorm material list	Qty
EZstorm half blocs	0
EZstorm lateral side grid	96
EZstorm access chimney (frame and cover included)	0
EZaccess (frame and cover included)	1
Geotextile surface area required	782.13
Geomembrane surface area required	0.00

450 373-8262
info@nextinfras.com

PARKING LOT STORAGE SYSTEM

EZstorm system overview

Project details :

Project description :	Project description :
Date :	7/16/2025
Location :	null, null

Client details :

Contact:	Matt Petitpas
E-mail :	matt.petitpas@arcadis.com

EZstorm configuration	
EZstorm application	Retention / Detention
Load type	Light traffic
Height	0.66 m
Length	18.40 m
Width	4.80 m
EZstorm storage volume	55.96 m³
Total storage volume	55.96 m³

Fill materiel	
Fill materiel	3/4" granular fill / Sand
Storage in stone	No
Stone porosity	-
Stone above system	-
Perimeter stone	-
Stone below system	-
Storage in stone	-

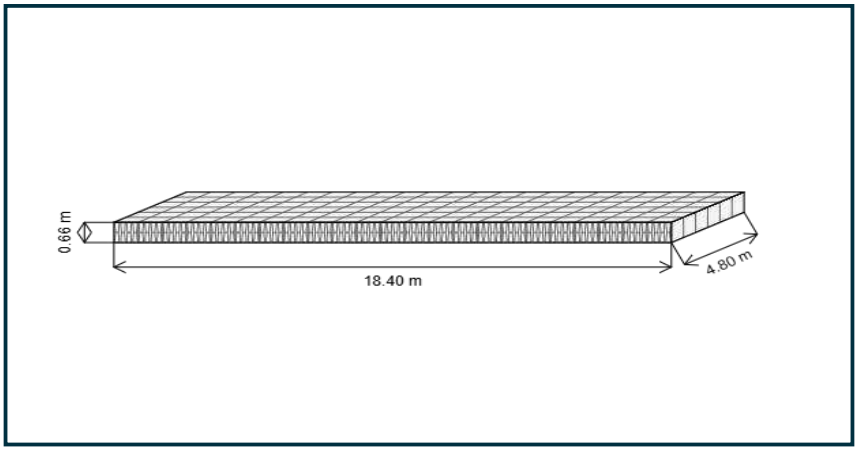

Summary

Total storage volume provided :	55.96 m³
EZstorm storage volume	55.96 m³
Storage in stone	-
Stone quantity (fill) required for this project :	42.80 m³

PARKING LOT STORAGE SYSTEM

EZstorm system accessories

- Inlet
- Inlet with HDS
- Outlet
- Inspection port
- Pretreatment row
- EZaccess manhole

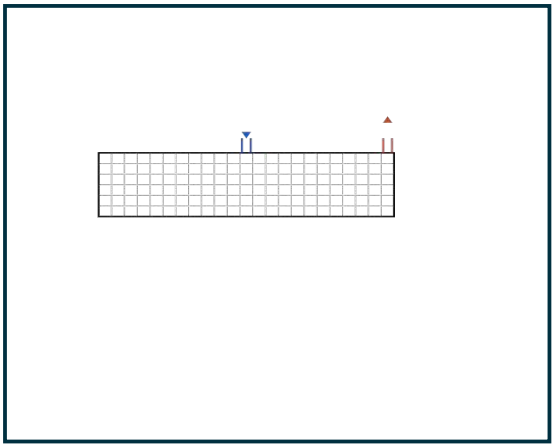

4.80 m

18.40 m

Material list

EZstorm material list	Qty
EZstorm half blocs	0
EZstorm lateral side grid	58
EZstorm access chimney (frame and cover included)	0
EZaccess (frame and cover included)	0
Geotextile surface area required	497.43
Geomembrane surface area required	227.99

450 373-8262
info@nextinfras.com

Recommended backfill materials					
	Layer layout	Description		Density requirements	
		Traffic load	No traffic	Traffic load	No traffic
A	Backfill located above layer B	Roadway structure	Topsoil backfill with a grain size of 30 mm (1¼ in)	According to roadway structure specifications	No compaction necessary
B	Upper Backfill: Backfill located directly above the EZStorm™ blocs and below Layer A	Same material as the base and lateral backfill (20mm (3/4 in) granular material or sand), 20mm (3/4 in) clear stone is also acceptable.		Place a 300 mm (12 in) layer of the same material as the base and side fill, on top of the structure, without driving over it. Then compact to a minimum of 95% of S.P., using a light equipment weighing no more than 5 metric tons (11.000 lbs)	
C	Lateral backfill: Located between the sidewall grids of the EZStorms and the limits of the excavated volume	Frost-resistant granular material with a maximum grain diameter of 20mm (3/4 in) per 300 mm layer and compacted at a rate > 95% SP.		Spread the backfill evenly in layers of 300 mm (12 in) maximum and compact using a light or medium compactor (vibrating plate or rammer).	
D	Laying bed: located under the EZStorm™ blocks, between the foundation floor and the base of the blocks.	Subgrade granular material 100 mm (4 in) Min. 20mm (3/4 in) granular material, clear stone or sand to 96% MP		Compact to at least 95% Standard Proctor (S.P.). It is essential lo lay the system on a flat, solid horizontal surface. A minimum bed thickness of 100 to 150 mm (4 to 6 in) is required.	

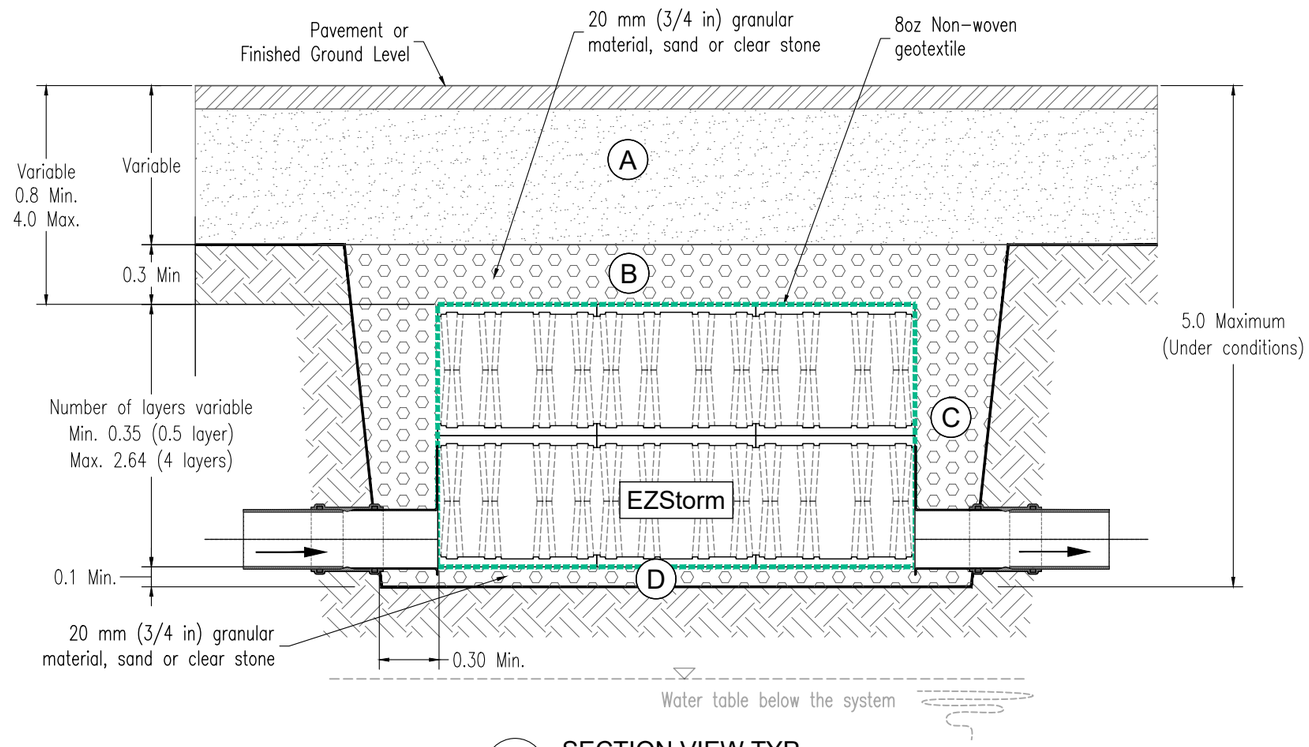

1
01
SECTION VIEW TYP.
SCALE 1:30

*All dimensions in meters unless specified otherwise.

NEXT
1305 Hill Ave, West Palm Beach, FL 33407
www.nextinfras.com

PROJECT:
Typical section view minimum and maximum depth and layers

ISSUED FOR INFORMATION

TYPICAL EZSTORM CROSS SECTION AND GENERAL NOTES

EZStorm System

N°.	REVISION	DATE	BY

PROJECT N°:	DATE:
DRAWN BY: S.M.	CHECKED BY: S.K.
SCALE: N.T.S.	SHEET N°:

EZSTORMSYSTEM ENG.-V4 TTBL_THIN 11X17

EZ STORM CROSS SECTION SPECIFICATIONS

INFILTRATION

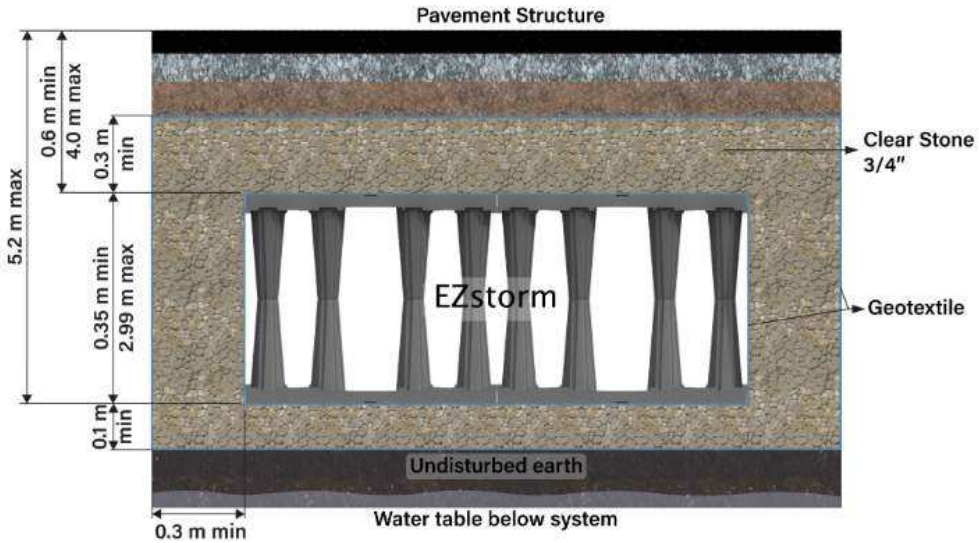

RETENTION / DETENTION

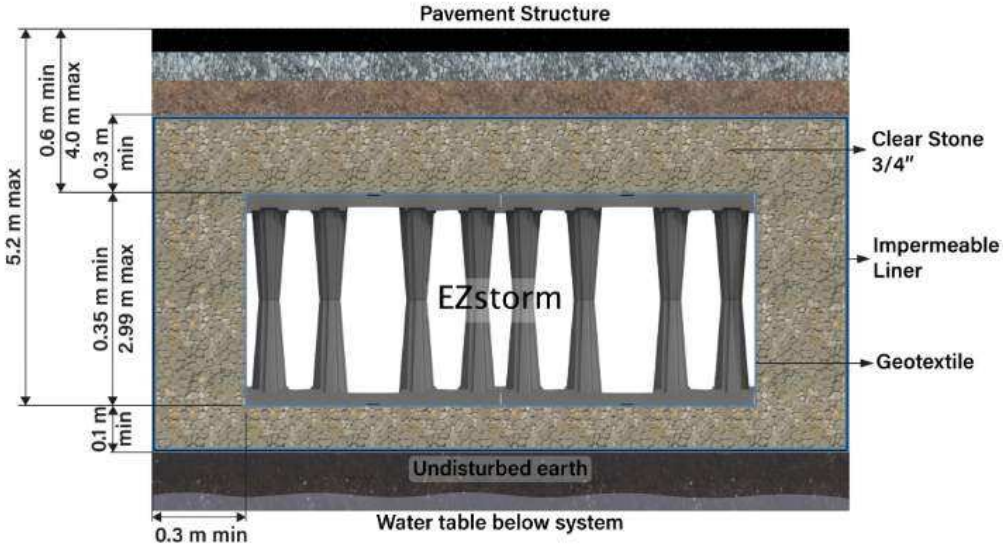

WATTS®	Adjustable Accutrol Weir Tag: _____	Adjustable Flow Control for Roof Drains

ADJUSTABLE ACCUTROL (for Large Sump Roof Drains only)

For more flexibility in controlling flow with heads deeper than 2", Watts Drainage offers the Adjustable Accutrol. The Adjustable Accutrol Weir is designed with a single parabolic opening that can be covered to restrict flow above 2" of head to less than 5 gpm per inch, up to 6" of head. To adjust the flow rate for depths over 2" of head, set the slot in the adjustable upper cone according to the flow rate required. Refer to Table 1 below.
Note: Flow rates are directly proportional to the amount of weir opening that is exposed.

EXAMPLE:

For example, if the adjustable upper cone is set to cover 1/2 of the weir opening, flow rates above 2"of head will be restricted to 2-1/2 gpm per inch of head.

Therefore, at 3"of head, the flow rate through the Accutrol Weir that has 1/2 the slot exposed will be:
[5 gpm (per inch of head) x 2 inches of head] + 2-1/2 gpm (for the third inch of head) = 12-1/2 gpm.

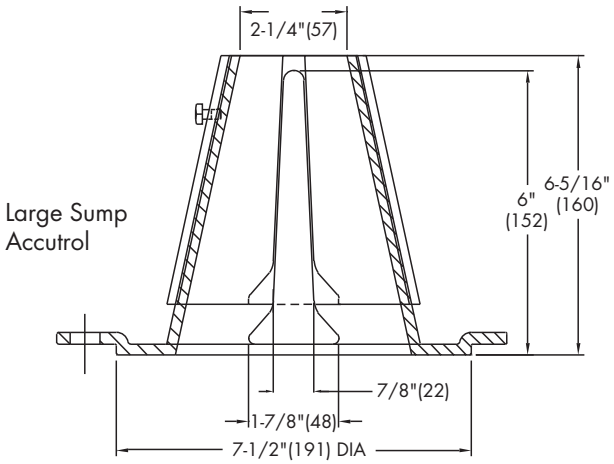

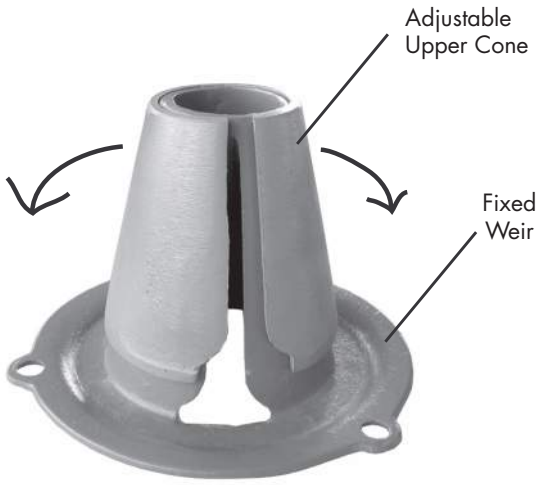

1/2 Weir Opening Exposed Shown Above

TABLE 1. Adjustable Accutrol Flow Rate Settings

Weir Opening Exposed	1"	2"	3"	4"	5"	6"
	Flow Rate (gallons per minute)					
Fully Exposed	5	10	15	20	25	30
3/4	5	10	13.75	17.5	21.25	25
1/2	5	10	12.5	15	17.5	20
1/4	5	10	11.25	12.5	13.75	15
Closed	5	5	5	5	5	5

Job Name _____ Contractor _____

Job Location _____ Contractor's P.O. No. _____

Engineer _____ Representative _____

Watts product specifications in U.S. customary units and metric are approximate and are provided for reference only. For precise measurements, please contact Watts Technical Service. Watts reserves the right to change or modify product design, construction, specifications, or materials without prior notice and without incurring any obligation to make such changes and modifications on Watts products previously or subsequently sold.

WATTS®
A Watts Water Technologies Company

USA: Tel: (800) 338-2581 • Fax: (828) 248-3929 • Watts.com
Canada: Tel: (905) 332-4090 • Fax: (905) 332-7068 • Watts.ca
Latin America: Tel: (52) 81-1001-8600 • Fax: (52) 81-8000-7091 • Watts.com

© 2016 Watts

5.0 STORMWATER MANAGEMENT

5.1 INTRODUCTION

The general approach to Stormwater Management (SWM) in the Kanata West area is to design according to the dual drainage principle. Under this principle, the engineered network of streets provides safe conveyance for runoff from rare storm events when peak rates of runoff are greater than the inlets (catchbasins) can intercept. This concept ensures that any future increase in runoff will not result in increased hydraulic grade lines (HGLs) from higher rates of flow through storm sewers, but rather will be conveyed by wide street segments with marginal increase in flow depth, which provides greater protection against basement flooding.

The minor system is designed to convey the 5 year runoff without surcharge. The minor system is also designed to operate under limited surcharge in the 100 year event such that maximum possible clearance is provided between the HGL and building floor slab (in commercial development areas with no basements).

5.2 STORMWATER MANAGEMENT POND

Stormwater runoff captured to the minor system will be conveyed to the Kanata West SWM Pond 3 for water quality control and off-site quantity control up to the 10-year event. The SWM Pond is designed to provide an “enhanced” (80%TSS removal) level of treatment prior to discharging to the Carp River.

The SWM Pond is designed in accordance with the recommendations of the “Kanata West Master Servicing Study” (2006) and the “Carp River Watershed/ Subwatershed Study” (2004). Refer to the “Taggart-Loblaws Subdivision Stormwater Management Facility Design Report” by Stantec Consulting Ltd. (June 2013) for specific details related to the stormwater management facility design.

5.3 STORM SEWER DESIGN

The proposed storm sewers were designed in accordance with the City of Ottawa Sewer Design Guidelines (2012). The design criteria used in sizing the storm sewers is summarized as follows, with reference to the corresponding section of the City of Ottawa Sewer Design Guidelines:

- Design Return Period as per Level of Service = 5 years
- Sewer sizing by Rational Method calculations.
- Inlet Time = 10 min
- Minimum velocity – 0.80 m/s
- Maximum velocity – 3.00 m/s
- Manning roughness coefficient for all smooth wall pipes – 0.013
- Weighted runoff coefficients (C) were calculated based on the estimated imperviousness of each subcatchment, where C = 0.7*imp + 0.2.

  Imperviousness was estimated from hard and soft surfaces within each subcatchment for the proposed site plan.

Appendix E

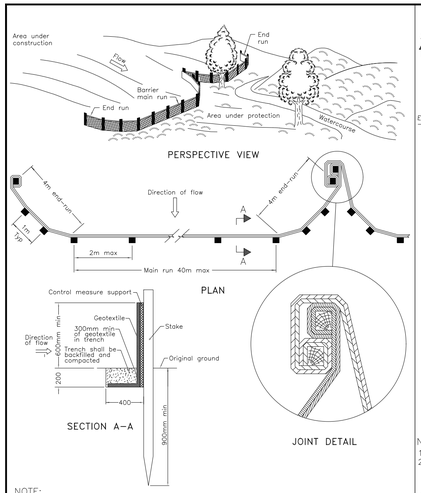

NOTE:
A All dimensions are in millimetres unless otherwise shown.

ONTARIO PROVINCIAL STANDARD DRAWING | Nov 2021 | Rev 3

HEAVY–DUTY SILT FENCE BARRIER

OPSD 219.130

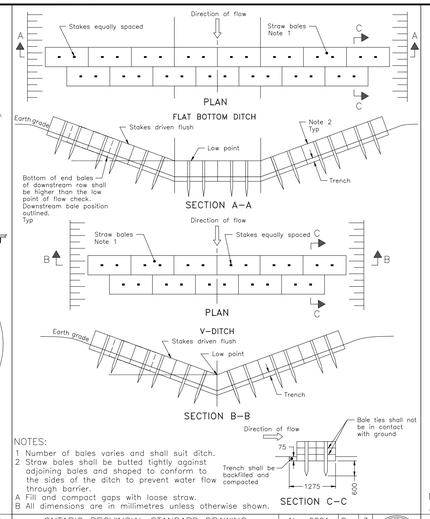

NOTES:
1 Number of bales varies and shall suit ditch.
2 Straw bales shall be butted tightly against adjoining bales and shaped to conform to the sides of the ditch to prevent water flow through barrier.
A Fill and compact gaps with loose straw.
B All dimensions are in millimetres unless otherwise shown.

ONTARIO PROVINCIAL STANDARD DRAWING | Nov 2021 | Rev 3

STRAW BALE FLOW CHECK DAM

OPSD 219.180

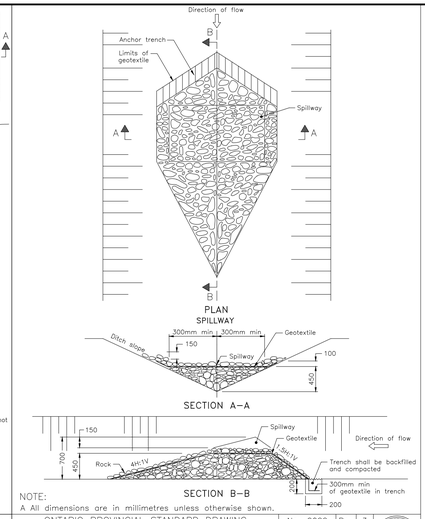

NOTE:
A All dimensions are in millimetres unless otherwise shown.

ONTARIO PROVINCIAL STANDARD DRAWING | Nov 2022 | Rev 3

TEMPORARY ROCK FLOW CHECK DAM V–DITCH

OPSD 219.210

NOTES:

1. THE CONTRACTOR SHALL IMPLEMENT BEST MANAGEMENT PRACTICES, TO PROVIDE FOR PROTECTION OF THE AREA DRAINAGE SYSTEM AND THE RECEIVING WATERCOURSE, DURING CONSTRUCTION ACTIVITIES. THE CONTRACTOR ACKNOWLEDGES THAT FAILURE TO IMPLEMENT APPROPRIATE EROSION AND SEDIMENT CONTROL MEASURES MAY BE SUBJECT TO PENALTIES IMPOSED BY ANY APPLICABLE REGULATORY AGENCY.
2. SILT FENCE TO BE ERECTED PRIOR TO EARTH WORKS BEING COMMENCED. SILT FENCE TO BE INSPECTED DAILY AND MAINTAINED UNTIL VEGETATION IS ESTABLISHED OR UNTIL START OF SUBSEQUENT PHASE.
3. STRAW BALE SEDIMENT TRAPS TO BE CONSTRUCTED IN EXISTING ROAD SIDE DITCHES. TRAPS TO REMAIN AND BE MAINTAINED UNTIL VEGETATION IS ESTABLISHED.
4. FILTER CLOTH TO BE PLACED AND MAINTAINED UNDER COVER OF ALL PROPOSED CATCHBASINS AFTER BASE COURSE, AND EXISTING CATHBASINS IDENTIFIED OUTSIDE OF CONSTRUCTION LIMIT. FILTER CLOTH IN STREET CB'S TO REMAIN UNTIL ALL CURBS ARE CONSTRUCTED. FILTER CLOTH IN RYCB'S TO REMAIN UNTIL VEGETATION IS ESTABLISHED. ALL CATHCBASINS TO BE REGULARLY INSPECTED AND CLEANED AS NECESSARY, UNTIL SOD AND CURBS ARE CONSTRUCTED.
5. CONTRACTOR TO PROVIDE DETAILS ON LOCATION(S) AND DESIGN OF DEWATERING TRAP(S) PRIOR TO COMMENCING WORK. CONTRACTOR ALSO RESPONSIBLE FOR MAINTAINING TRAP(S) AND ADJUSTING SIZE(S) IF DEEMED REQUIRED BY THE ENGINEER DURING CONSTRUCTION.
6. WORKS NOTED ABOVE ARE TO BE INSTALLED, INSPECTED, MAINTAINED AND ULTIMATELY REMOVED BY SERVICING CONTRACTOR.
7. THIS IS A "LIVING DOCUMENT" AND MAY BE MODIFIED IN THE EVENT THE PROPOSED CONTROL MEASURES ARE INSUFFICIENT.

LEGEND:

- HEAVY DUTY SILT FENCE AS PER OPSD-219.130
- SNOW FENCE
- STRAW BALE CHECK DAM AS PER OPSD-219.180
- ROCK CHECK DAM AS PER OPSD-219.210
- FILTER CLOTH PLACED UNDER EXISTING CB COVER
- TEMPORARY MUD MAT 0.15m THICK 50mm CLEAR STONE ON NON WOVEN FILTER CLOTH

N

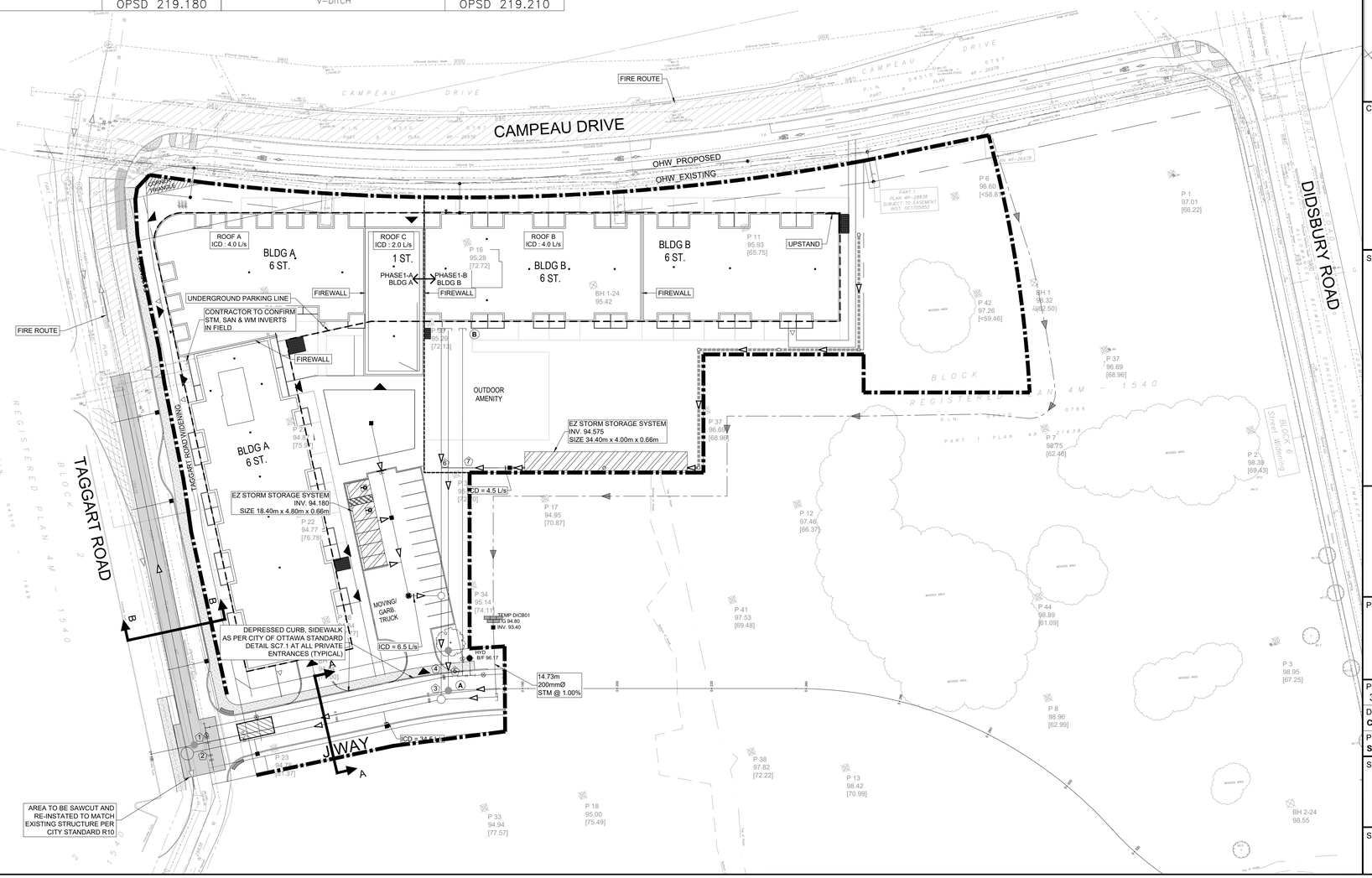

CLIENT

8201 CAMPEAU DRIVE Inc.

COPYRIGHT
This drawing has been prepared solely for the intended use, thus any reproduction or distribution for any purpose other than authorized by Arcadis is forbidden. Written dimensions shall have precedence over scaled dimensions. Contractors shall verify and be responsible for all dimensions and conditions on the job, and Arcadis shall be informed of any variations from the dimensions and conditions shown on the drawing. Shop drawings shall be submitted to Arcadis for general conformance before proceeding with fabrication.

Arcadis Professional Services (Canada) Inc.
formerly IBI Group Professional Services (Canada) Inc.

ISSUES

No.	DESCRIPTION	DATE
1	SUBMISSION 1 FOR CITY REVIEW	2025-07-18
2	SUBMISSION 2 FOR CITY REVIEW	2025-10-03
3	SUBMISSION 3 FOR CITY REVIEW	2026-03-13

SEE 010 FOR NOTES, LEGEND, CB TABLE, STREET SECTIONS AND DETAILS

KEY PLAN

CONSULTANTS

SEAL

LICENSED PROFESSIONAL ENGINEER
S. E. LABADIE
100214983
2026/03/13
PROVINCE OF ONTARIO

ARCADIS
333 Preston Street - Suite 500
Ottawa ON K1S 5N4 Canada
tel 613 225 1311
www.arcadis.com

PROJECT
8201 CAMPEAU DRIVE

PROJECT NO: 30282806

DRAWN BY:	CHECKED BY:
C.C.	T.B.
PROJECT MGR:	APPROVED BY:
S.L.	S.L.

SHEET TITLE
SEDIMENT - EROSION PLAN

SHEET NUMBER 900 | ISSUE 2

D07-12-25-0103

SCALE CHECK 1 in 19407 10mm

File Location: C:\Users\cormierc3992\DC\ACCDocs\Arcadis ACC US\ACA-30282806-8201 Campeau Drive\Project Files\10_WIP\04_CIVIL\Sheets\900 EROSION - SEDIMENT PLAN.dwg Last Saved: March 4, 2026, by pettipam8475 Plotted: March 13, 2026 3:43:58 PM by Cormier, Chris

GENERAL LEGEND

Symbol	Description
	LIMIT OF CONSTRUCTION
	PHASING LINE
	BARRIER CURB
	MOUNTABLE CURB
	DEPRESSED BARRIER CURB
CONCRETE SIDEWALK	CONCRETE SIDEWALK
	TACTILE WALKING SURFACE INDICATOR
ASPHALT SIDEWALK	ASPHALT SIDEWALK / PATHWAY
BUS	BUS STOP CONCRETE / ASPHALT
	AREA TO BE SAWCUT

SERVICING LEGEND

Symbol	Description
MH118A	SANITARY MANHOLE
200mmØ SAN	SANITARY SEWER
MH109 MH118	STORM MANHOLE
825mmØ STM	STORM SEWER - LESS THAN 900Ø
900mmØ STM	STORM SEWER - 900Ø AND GREATER
200Ø WATERMAIN	WATERMAIN
CB100 T/G 104.10	STREET CATCHBASIN C/W TOP OF GRATE
CICB101 G/G 104.25	CURB INLET CATCHBASIN C/W GUTTER GRADE
DCB100 T/G 104.10	DOUBLE CATCHBASIN C/W TOP OF GRATE
DCICB101 G/G 104.25	DOUBLE CURB INLET CATCHBASIN C/W GUTTER GRADE
DI101 T/G 103.59	DITCH INLET MANHOLE C/W TOP OF GRATE
CBMH101 T/G 103.59	CATCHBASIN MANHOLE C/W TOP OF GRATE
RYCB T/G 104.35	REAR YARD CATCHBASIN IN ROAD CONNECTING STRUCTURE C/W SOLID GRATE
T/G 104.35 INV 103.35	REAR YARD "TEE" CATCHBASIN (300Ø) C/W TOP OF GRATE AND INVERT OUT
T/G 104.50 INV 103.50	REAR YARD "END" CATCHBASIN (300Ø) C/W TOP OF GRATE AND INVERT OUT
T/G 104.35 INV 103.35	REAR YARD "CUSTOM ANGLED " CATCHBASIN (450Ø) C/W TOP OF GRATE AND INVERT OUT
T/G 104.35 INV 103.35	REAR YARD "THREE WAY" CATCHBASIN (450Ø) C/W TOP OF GRATE AND INVERT OUT
	PERFORATED REAR YARD SUBDRAIN
300mmØ CSP	CSP CULVERT C/W DIAMETER
VB	VALVE AND VALVE BOX
V&VC	VALVE AND VALVE CHAMBER
	PARK VALVE CHAMBER C/W SERVICE POST
HYD 104.35	FIRE HYDRANT C/W BOTTOM OF FLANGE ELEVATION
200Ø WM RED 150Ø WM	WATERMAIN REDUCER
2 VBENDS	VERTICAL BEND LOCATION
	SIAMESE CONNECTION (IF REQUIRED)
M	METER (IF REQUIRED)
RM	REMOTE METER (IF REQUIRED)
A	WATERMAIN IDENTIFICATION (IF REQUIRED)
1	PIPE CROSSING IDENTIFICATION (IF REQUIRED)
	SINGLE SERVICE LOCATION
	DOUBLE SERVICE LOCATION
*	SINGLE SERVICE LOCATION (REQUIRES FOUNDATION SLEEVE)
BH 12 102.00	INFERRED REFUSAL (SEE GEOTECHNICAL REPORT)
HGL 101.79	100 YEAR STORM HYDRAULIC GRADE LINE AT MANHOLE
USF 101.79	UNDERSIDE OF FOOTING ELEVATION
	CLAY SEAL IN SEWER / WATERMAIN TRENCH

NOTES :

1. ALL MATERIALS AND CONSTRUCTION IS TO BE IN ACCORDANCE WITH THE CURRENT CITY OF OTTAWA STANDARD DRAWINGS & SPECIFICATIONS OR OPSD/OPSS IF CITY DRAWINGS AND SPECIFICATIONS DO NOT APPLY.
2. THE POSITION OF UNDERGROUND AND ABOVE GROUND SERVICE, UTILITIES AND STRUCTURES ARE NOT NECESSARILY SHOWN ON THE CONTRACT DRAWINGS, AND WHERE SHOWN, THE ACCURACY OF THE POSITION OF SUCH SERVICE, UTILITIES AND STRUCTURES IS NOT GUARANTEED. THE CONTRACTOR IS RESPONSIBLE FOR DETERMINING THE EXACT LOCATION, SIZE, MATERIAL AND ELEVATION OF ALL EXISTING SERVICES AND UTILITIES PRIOR TO CONSTRUCTION.
3. THE CONTRACTOR SHALL REPORT ALL CONFLICTS, DISCOVERIES OF ERROR AND DISCREPANCIES TO THE ENGINEER.
4. THE CONTRACTOR SHALL BE RESPONSIBLE TO PROTECT AND ASSUME RESPONSIBILITY FOR ALL UTILITIES WHETHER OR NOT SHOW ON THESE DRAWINGS.
5. THE CONTRACTOR SHALL BE RESPONSIBLE TO PROTECT ALL LANDS BEYOND THE SITE LIMITS. ANY AREAS BEYOND THE SITE LIMITS, WHICH ARE DISTURBED DURING CONSTRUCTION, SHALL BE REPAIRED AND RESTORED TO ORIGINAL CONDITION OR BETTER, TO THE SATISFACTION OF THE ADJACENT LAND OWNER, THE OWNER, THE OWNERS REPRESENTATIVES AND/OR THE AUTHORITY HAVING JURISDICTION AT THE EXPENSE OF THE CONTRACTOR.
6. WHERE NECESSARY, THE CONTRACTOR SHALL IMPLEMENT A TRAFFIC MANAGEMENT PLAN TO THE SATISFACTION OF THE CITY OF OTTAWA. ALL CONSTRUCTION SIGNAGE MUST CONFORM TO THE LATEST VERSION OF THE M.T.O. MANUAL OF UNIFORM TRAFFIC CONTROL DEVICES. ALL TEMPORARY TRAFFIC CONTROL MEASURES MUST BE REMOVED UPON THE COMPLETION OF THE WORKS.
7. SHOULD ANY BURIED ARCHAEOLOGICAL REMAINS BE FOUND ON THE PROPERTY DURING CONSTRUCTION ACTIVITIES, THE CONTRACTOR SHALL NOTIFY THE OWNER TO CONTACT THE HERITAGE OPERATIONS UNIT OF THE ONTARIO MINISTRY OF CULTURE MUST BE NOTIFIED IMMEDIATE, AND WORK WITHIN THE AREA SHALL BE CEASED UNTIL FURTHER NOTICE.
8. FOR GEOTECHNICAL INFORMATION REFER TO GEOTECHNICAL REPORT PG6934-1 PREPARED BY PATERSON GROUP.

   ACCESS LANES AND HEAVY LOADING AREA: (540mm)

40mm	- SUPERPAVE 12.5 ASPHALTIC CONCRETE
50mm	- SUPERPAVE 19.0 ASPHALTIC CONCRETE
150mm	- OPSS GRANULAR "A" CRUSHED STONE
300mm	- OPSS GRANULAR "B" TYPE II

9. FOR GEODETIC BENCHMARK AND GEOMETRIC LAYOUT OF STREET AND LOTS, REFER TO TOPOGRAPHICAL SURVEY AND PLAN OF SUBDIVISION PREPARED BY FARLEY, SMITH & DENIS SURVEYING Ltd. BENCHMARK BASED ON CAN--NET VIRTUAL REFERENCE SYSTEM NETWORK.
10. FOR SITE PLAN INFORMATION, REFER TO SITE PLAN PREPARED BY ARCADIS
11. THESE DRAWINGS ARE NOT TO BE SCALED OR USED FOR LAYOUT PURPOSES
12. ROADWAY SECTIONS REQUIRING GRADE RAISE TO PROPOSED SUB GRADE LEVEL TO BE FILLED WITH ACCEPTABLE NATIVE EARTH BORROW OR IMPORTED OPSS SELECTED SUBGRADE MATERIAL IF NATIVE MATERIAL IS DEFICIENT AS PER RECOMMENDATION OF GEOTECHNICAL ENGINEER.
13. IN AREAS WHERE EXISTING GROUND IS BELOW THE PROPOSED ELEVATION OF SEWER AND WATERMAINS, GRADE RAISING AND FILLING IS TO BE IN ACCORDANCE WITH THE RECOMMENDATIONS OF THE GEOTECHNICAL REPORT. AS PER CITY GUIDELINES ALL WATERMAINS IN FILL AREAS ARE TO BE TIED WITH RESTRAINING JOINTS AND THRUST BLOCKS.
14. THE CONTRACTOR SHALL IMPLEMENT THE EROSION AND SEDIMENT CONTROL PLAN PRIOR TO THE COMMENCEMENT OF ANY SITE CONSTRUCTION. ALL EROSION AND SEDIMENT CONTROL MEASURES SHALL BE INSTALLED TO THE SATISFACTION OF THE ENGINEER, OR ANY REGULATORY AGENCY. ALL EROSION AND SEDIMENT CONTROL MEASURES SHALL BE MAINTAINED UNTIL VEGETATION IS ESTABLISHED OR UNTIL THE START OF A SUBSEQUENT PHASE.
15. CONTRACTORS SHALL BE RESPONSIBLE FOR KEEPING CLEAN ALL ROADS WHICH BECOME COVERED IN DUST, DEBRIS AND/OR MUD AS A RESULT OF ITS CONSTRUCTION OPERATIONS.
16. THE CONTRACTOR SHALL BE RESPONSIBLE FOR ANY ADDITIONAL BEDDING OR ADDITIONAL STRENGTH PIPE SHOULD THE MAXIMUM OPSD TRENCH WIDTH BE EXCEEDED.
17. ALL PIPE, CULVERTS, STRUCTURES REFER TO NOMINAL INSIDE DIMENSIONS.
18. SHOULD CLAY SEALS BE REQUIRED, THEY SHALL BE INSTALLED AS PER THE RECOMMENDATIONS WITHIN THE GEOTECHNICAL REPORT.
19. UNLESS SPECIFICALLY NOTED OTHERWISE, PIPE MATERIALS SHALL BE AS FOLLOWS;
   -WATERMAINS TO BE PVC DR18
   -SANITARY SEWER TO BE PVC DR35
   -PERFORATED STORM SEWERS IN REAR YARDS AND LANDSCAPE AREAS TO BE HDPE
   -STORM SEWERS 375mm DIAMETER AND LESS TO BE PVC DR35
   -STORM SEWERS 450mm DIAMETER AND GREATER TO BE CONCRETE, CLASS AS PER OPSD 807.010 OR 807.030, OR HIGHER
   FOR SHALLOW SEWERS, REFER TO CITY STANDARD S35.
20. ALL CONNECTIONS TO EXISTING WATERMAINS ARE TO BE COMPLETED BY CITY FORCES. CONTRACTOR IS TO EXCAVATE, BACKFILL, COMPACT AND REINSTATE.
21. ANY WATERMAIN WITH LESS THAN 2.4m AND ANY SEWER WITH LESS THAN 2.0m DEPTH OF COVER REQUIRES THERMAL INSULATION AS PER CITY OF OTTAWA STANDARD W22 OR AS APPROVED BY THE ENGINEER.
22. ALL FIRE HYDRANTS AS PER CITY STANDARD W19, c/w 150mmØ LEAD UNLESS OTHERWISE SPECIFIED.
23. ALL STUBBED SEWERS SHALL HAVE PRE-MANUFACTURED CAPS INSTALLED.
24. ALL CATCHBASINS SHALL HAVE A 600mm SUMP. ALL CATCHBASIN MANHOLES, AND ALL STORM MANHOLES WITH OUTLETTING PIPE SIZES LESS THAN 900mm, SHALL HAVE A 300mm SUMP.
25. ALL SANITARY MANHOLES IN PONDING AREAS SHALL BE EQUIPPED WITH A WATERTIGHT COVER.
26. ALL LEADS FOR STREET CATCHBASIN'S AND CURB INLET CATCHBASIN'S CONNECTED TO MAIN SHALL BE 200mmø PVC DR35 @ MIN 2% SLOPE UNLESS NOTED OTHERWISE. ALL LEADS FOR RYCB'S CONNECTED TO MAIN SHALL BE 200mmø PVC DR35 @ MIN 1% SLOPE UNLESS NOTED OTHERWISE.
27. UNLESS SPECIFICALLY NOTED OTHERWISE, ALL STREET CATCHBASINS SHALL BE INSTALLED WITH TWO - 3.0m MINIMUM SUBDRAINS INSTALLED LONGITUDINALLY, PARALLEL WITH THE CURB. ALL CATCHBASINS IN ASPHALT AREAS, NOT ADJACENT TO A CURB, SHALL BE INSTALLED WITH FOUR - 3.0m MINIMUM SUBDRAINS INSTALLED ORTHOGONALLY.
28. INLET CONTROL DEVICES SHALL BE INSTALLED PRIOR TO COMPLETING THE ROAD BASE (GRANULAR A).
29. ALL SEWER SERVICE LATERALS WITH MAINLINE CONNECTIONS DEEPER THAN 5.0m REQUIRE A CONTROLLED SETTLEMENT JOINT.
30. EACH BUILDING SHALL BE EQUIPPED WITH A SANITARY AND STORM SEWER BACKWATER VALVE AND CLEAN-OUT ON ITS PRIMARY SERVICE IF REQUIRED BY ONTARIO BUILDING CODE REQUIREMENTS (BY OTHERS)
31. THE SUBGRADE OF ALL STRUCTURES, PIPE, ROADS, SIDEWALKS, WALKWAYS, AND BUILDINGS SHALL BE INSPECTED BY THE GEOTECHNICAL ENGINEER PRIOR TO PROCEEDING WITH CONSTRUCTION.
32. TOP COURSE ASPHALT SHALL NOT BE PLACED UNTIL THE FINAL CCTV INSPECTION AND NECESSARY REPAIRS HAVE BEEN COMPLETED TO THE SATISFACTION OF THE ENGINEER AND THE CITY OF OTTAWA.
33. ALL RETAINING WALLS GREATER THAN 1.0m IN HEIGHT SHALL BE DESIGNED BY A QUALIFIED STRUCTURAL ENGINEER.
34. ALL RETAINING WALLS GREATER THAN 0.6m IN HEIGHT REQUIRE A GUARD. ANY GUARD ON A RETAINING WALL GREATER THAN 1.0m IN HEIGHT SHALL BE DESIGNED BY THE QUALIFIED STRUCTURAL ENGINEER RESPONSIBLE FOR THE WALL DESIGN.
35. UPON COMPLETION OF THE RETAINING WALL, THE CONTRACTOR SHALL REQUEST A CONFORMANCE CERTIFICATE FROM THE QUALIFIED ENGINEER RESPONSIBLE FOR THE WALL DESIGN.

CLIENT

8201 CAMPEAU DRIVE Inc.

COPYRIGHT
This drawing has been prepared solely for the intended use, thus any reproduction or distribution for any purpose other than authorized by Arcadis is forbidden. Written dimensions shall have precedence over scaled dimensions. Contractors shall verify and be responsible for all dimensions and conditions on the job, and Arcadis shall be informed of any variations from the dimensions and conditions shown on the drawing. Shop drawings shall be submitted to Arcadis for general conformance before proceeding with fabrication.

Arcadis Professional Services (Canada) Inc.
formerly IBI Group Professional Services (Canada) Inc.

ISSUES

No.	DESCRIPTION	DATE
1	SUBMISSION 1 FOR CITY REVIEW	2025-07-18
2	SUBMISSION 2 FOR CITY REVIEW	2025-10-03
3	SUBMISSION 3 FOR CITY REVIEW	2026-03-13

SEE 010 FOR NOTES, LEGEND, CB TABLE, STREET SECTIONS AND DETAILS

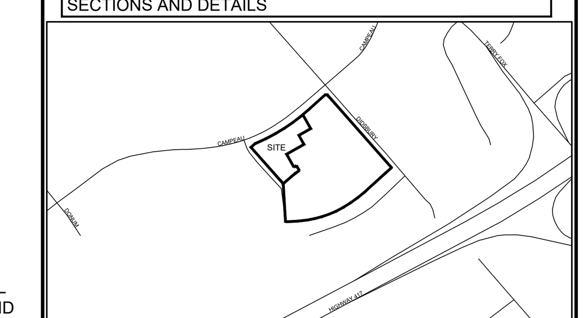

SEAL

LICENSED PROFESSIONAL ENGINEER
S. E. LABADIE
100214983
2026/03/13
PROVINCE OF ONTARIO

ARCADIS
333 Preston Street - Suite 500
Ottawa ON K1S 5N4 Canada
tel 613 225 1311
www.arcadis.com

PROJECT
8201 CAMPEAU DRIVE

PROJECT NO: 30282806	
DRAWN BY: **C.C.**	CHECKED BY: **T.B.**
PROJECT MGR: **S.L.**	APPROVED BY: **S.L.**

SHEET TITLE
NOTES & LEGEND

SHEET NUMBER	ISSUE
010	3

SCALE CHECK 1 in 10mm

19407

D07-12-25-0103

File Location: C:\Users\cormierc3992\DC\ACCDocs\Arcadis ACC US\ACA-30282806-8201 Campeau Drive\Project Files\10_WIP\04_CIVIL\Sheets\010 NOTES-LEGEND.dwg Last Saved: March 13, 2026, by cormierc3992 Plotted: March 13, 2026 3:43:37 PM by Cormier, Chris

GRADING LEGEND

0.5%	PROPOSED DITCH C/W FLOW DIRECTION AND SLOPE
1.0%	SLOPE C/W FLOW DIRECTION
	MAJOR OVERLAND FLOW ROUTE
× 104.62	PROPOSED SPOT GRADE
x104.40 IBF	PROPOSED SWALE GRADE
x104.50 ISWF	PROPOSED SWALE HIGH POINT GRADE
104.60 × 103.59	LOT CORNER GRADE C/W EXISTING GRADE
96.19	FULL STATIC PONDING GRADE
103.50	RETAINING WALL C/W TOP OF WALL AND GRASS GRADE
	TERRACING 3:1 MAXIMUM UNLESS NOTED OTHERWISE
	PRESSURE REDUCING VALVE
FFE 96.05	FINISHED FLOOR ELEVATION
	NOISE BARRIER LOCATION

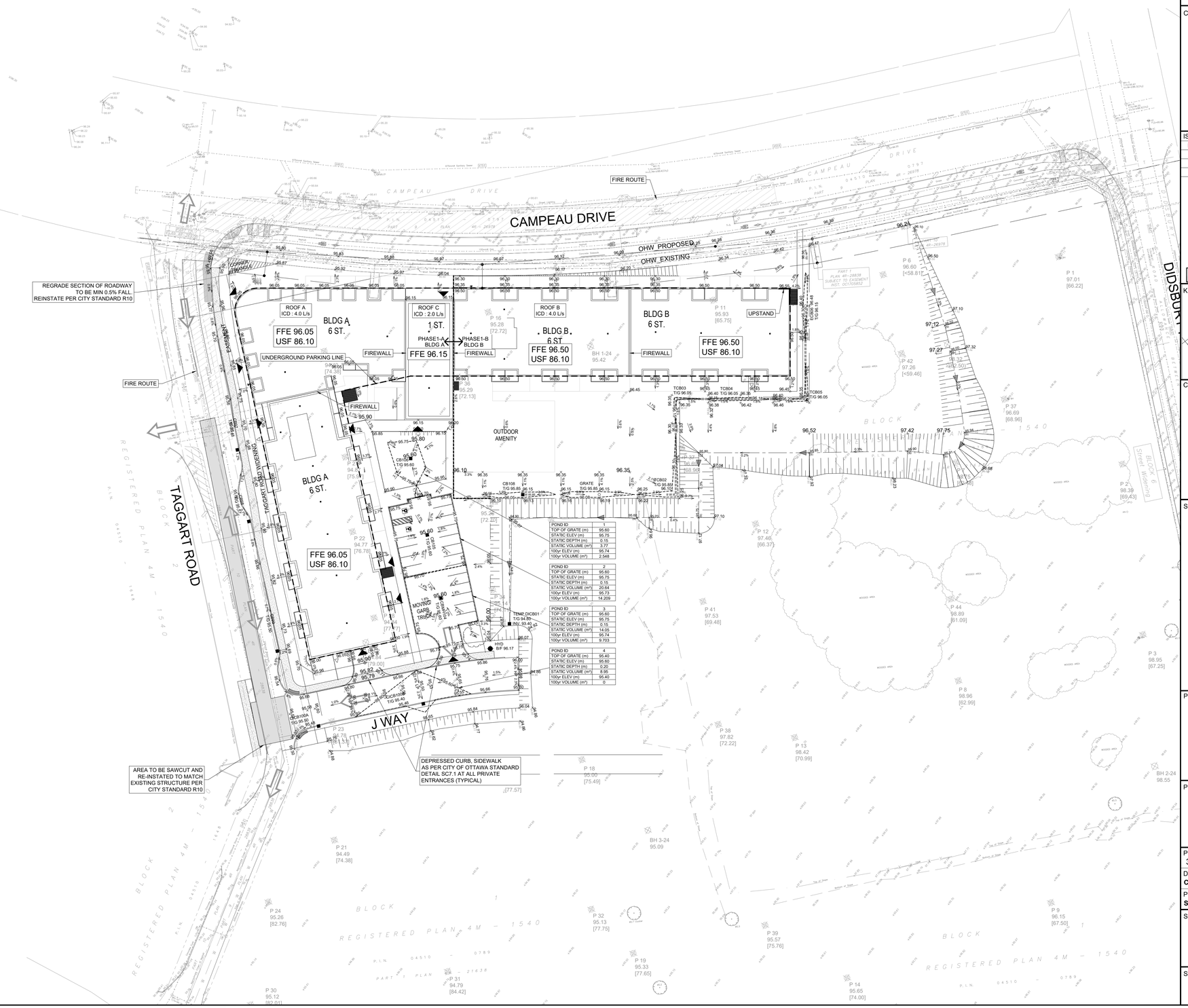

POND ID	1
TOP OF GRATE (m)	95.60
STATIC ELEV (m)	95.75
STATIC DEPTH (m)	0.15
STATIC VOLUME (m³)	3.77
100yr ELEV (m)	95.74
100yr VOLUME (m³)	2.548

POND ID	2
TOP OF GRATE (m)	95.60
STATIC ELEV (m)	95.75
STATIC DEPTH (m)	0.15
STATIC VOLUME (m³)	20.64
100yr ELEV (m)	95.73
100yr VOLUME (m³)	14.209

POND ID	3
TOP OF GRATE (m)	95.60
STATIC ELEV (m)	95.75
STATIC DEPTH (m)	0.15
STATIC VOLUME (m³)	14.05
100yr ELEV (m)	95.74
100yr VOLUME (m³)	9.703

POND ID	4
TOP OF GRATE (m)	95.40
STATIC ELEV (m)	95.60
STATIC DEPTH (m)	0.20
STATIC VOLUME (m³)	8.95
100yr ELEV (m)	95.40
100yr VOLUME (m³)	0

CLIENT

8201 CAMPEAU DRIVE Inc.

COPYRIGHT

This drawing has been prepared solely for the intended use, thus any reproduction or distribution for any purpose other than authorized by Arcadis is forbidden. Written dimensions shall have precedence over scaled dimensions. Contractors shall verify and be responsible for all dimensions and conditions on the job, and Arcadis shall be informed of any variations from the dimensions and conditions shown on the drawing. Shop drawings shall be submitted to Arcadis for general conformance before proceeding with fabrication.

Arcadis Professional Services (Canada) Inc.
formerly IBI Group Professional Services (Canada) Inc

ISSUES

No.	DESCRIPTION	DATE
1	SUBMISSION 1 FOR CITY REVIEW	2025-07-18
2	SUBMISSION 2 FOR CITY REVIEW	2025-10-03
3	SUBMISSION 3 FOR CITY REVIEW	2026-03-13

SEE 010 FOR NOTES, LEGEND, CB TABLE, STREET SECTIONS AND DETAILS

KEY PLAN

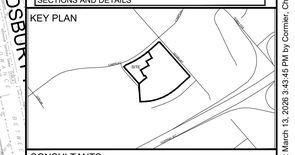

CONSULTANTS

1:500 0 5 15 25m

SEAL

LICENSED PROFESSIONAL ENGINEER
S. E. LABADIE
100214983
2026/03/13
PROVINCE OF ONTARIO

PRIME CONSULTANT

ARCADIS

333 Preston Street - Suite 500
Ottawa ON K1S 5N4 Canada
tel 613 225 1311
www.arcadis.com

PROJECT

8201 CAMPEAU DRIVE

PROJECT NO: 30282806	
DRAWN BY: **C.C.**	CHECKED BY: **T.B.**
PROJECT MGR: **S.L.**	APPROVED BY: **S.L.**

SHEET TITLE

GRADING PLAN

SHEET NUMBER	ISSUE
200	3

File Location: C:\Users\cormierc3992\DC\ACCDocs\Arcadis ACC US\ACA-30282806-8201 Campeau Drive\Project Files\10_WIP\04_CIVIL\Sheets\200 GRADING PLAN.dwg Last Saved: October 3, 2025, by petitjean9475 Plotted: March 13, 2026 3:43:45 PM by Cormier, Chris

D07-12-25-0103

SCALE CHECK 1 in 19407 10mm