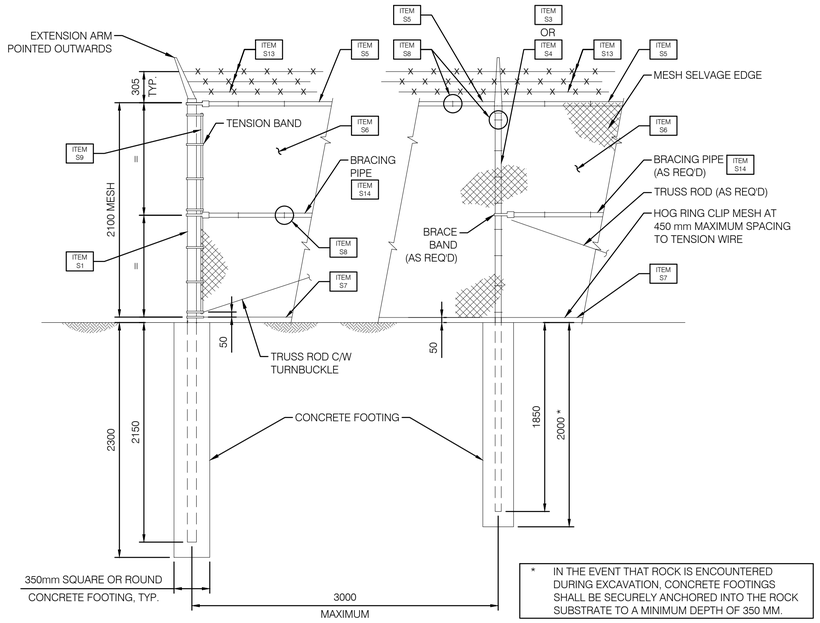

* IN THE EVENT THAT ROCK IS ENCOUNTERED DURING EXCAVATION, CONCRETE FOOTINGS SHALL BE SECURELY ANCHORED INTO THE ROCK SUBSTRATE TO A MINIMUM DEPTH OF 350 MM.

TYPICAL CORNER POST DETAIL
1:30

TYPICAL LINE POST DETAIL (WITH OR WITHOUT BRACING)
1:30

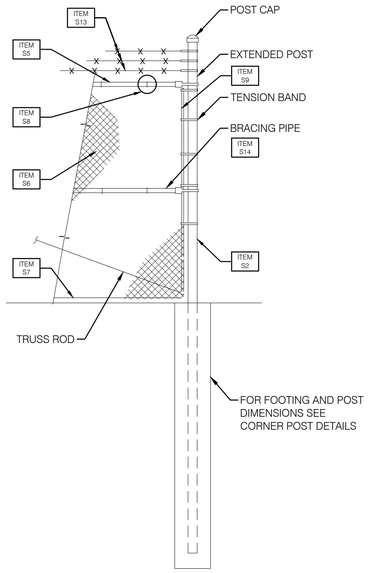

TYPICAL END POST DETAIL
1:30

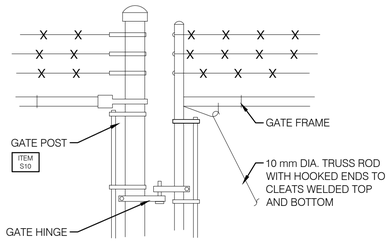

1 DETAIL
1:15

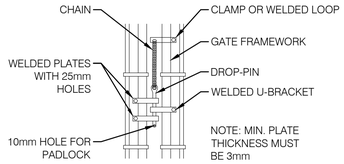

2 DETAIL
1:15

NOTES:

1. CHAIN LINK FENCE FABRIC SHALL BE IN ACCORDANCE WITH CAN/CGSB-138.1. CHAIN LINK FENCE FRAMEWORK AND GATE COMPONENTS SHALL BE IN ACCORDANCE WITH CAN/CGSB-138.2 AND CAN/CGSB-138.4 RESPECTIVELY.
2. CONSTRUCTION SHALL MEET THE REQUIREMENTS OF CAN/CGSB-138.3.
3. HOT-DIP GALVANIZING:
   (a) GALVANIZED COATING TO ALL STEEL WIRE CLIPS, BARS AND BANDS, MIN. 360 G/M .
   (b) POSTS AND RAIL CAPS GALVANIZED MIN. 600 G/M .
   (c) ALL BOLTS, NUTS AND WASHERS TO BE GALVANIZED.
4. WELDS AFTER GALVANIZING AND MODIFICATIONS TO FENCE & GATES SHALL BE TOUCHED UP WITH TWO COATS OF ZINC-RICH PAINT.
5. FOR DETAILS OF ELECTRICAL GROUNDING SEE ELECTRICAL DRAWINGS.
6. CONCRETE FOOTING:

   MIX: AGGREGATE, SAND AND PORTLAND CEMENT, MINIMUM STRENGTH 20 MPA. CEMENT TYPE SHALL BE FINALIZED BY GEOTECHNICAL ENGINEER.

   FROST DEPTH: DEPTH OF FENCE FOOTING SHALL NOT BE LESS THAN FROST PENETRATION. PER THE GEOTECHNICAL REPORT, THE FROST DEPTH IS 1.8M.
7. STRAINING POSTS WITH A BRACE RAILS ON EACH SIDE SHALL BE INSTALLED AT EQUAL INTERVALS NOT EXCEEDING 60M. ADDITIONAL STRAINING POSTS SHALL BE INSTALLED WHERE CHANGES IN VERTICAL ALIGNMENT OF THE FENCE EXCEED 30 DEGREES.
8. FENCE POSTS SHALL BE SPACED AT MAX. 3M CENTER TO CENTER.
9. TWO 10MM DIAMETER TRUSS RODS WITH TURNBUCKLES ARE REQUIRED AT EACH STRAINING POST.
10. BRACE PIPE AND TRUSS ROD ARE AT CORNER, END, GATE AND STRAINING POSTS. BRACE RAILS ARE INSTALLED USING RAIL ENDS AND CENTRE BANDS AT EACH END.

ITEM S1 CORNER POST: 88.9MM O.D. SCH. 40 STEEL PIPE COMPLETE WITH EXTENSION ARM, TWO HORIZONTAL 42.2MM O.D. SCH. 40 BRACING PIPES AND TENSION BARS WITH BRACE AND TENSION BANDS, TWO 10 DIA. TRUSS RODS AND TURNBUCKLE ASSEMBLIES.

ITEM S2 END POST: 88.9MM O.D. SCH. 40 STEEL PIPE COMPLETE WITH CAP FOR END POST, ONE HORIZONTAL 42.2MM SCH. 40 O.D. BRACING PIPE AND ONE TENSION BAR WITH BRACE AND TENSION BANDS, ONE 10 DIA. TRUSS ROD AND TURNBUCKLE ASSEMBLY.

ITEM S3 LINE POST WITH BRACING: 60.3MM SCH. 40 O.D. STEEL PIPE WITH EXTENSION ARM, ONE HORIZONTAL 42.2MM SCH. 40 O.D. STEEL BRACING PIPE WITH BRACE BANDS, ONE 10 DIA. TRUSS ROD AND TURNBUCKLE ASSEMBLY, 3.8MM DIA. (9 GA) WIRE TIES.

ITEM S4 LINE POST: 60.3MM O.D. SCH. 40 STEEL PIPE WITH POST TOP AND 3.8MM DIA. (9 GA) WIRE TIES.

ITEM S5 TOP RAIL: 42.2MM O.D. SCH. 40 STEEL PIPE INCLUDING SLIP-ON COUPLING SLEEVE AND SCREWS FOR EACH STD LENGTH.

ITEM S6 FABRIC: TYPE 1 STEEL FABRIC WITH 50MM MESH AND 3.9MM DIA. (9 GA) WIRE. FABRIC WIRE SHALL BE TWISTED (MIN. 2 TURNS) AT TOP AND BOTTOM.

ITEM S7 BOTTOM WIRE: 5.0MM DIA. WIRE AT BOTTOM OF FABRIC COMPLETE WITH TURNBUCKLE AND TENSION BAND.

ITEM S8 WIRE TIES: 3.8MM DIA. STEEL WIRE TIES SHALL BE TWISTED MIN 2 TURNS AND EXCESS TAILS TO BE CUT OFF CLOSELY AT THE TWISTS.

ITEM S9 TENSION BAR: 20MM X 5MM ON TERMINAL POSTS AND GATES.
TENSION BAND: 20MM X 3MM

ITEM S10 3000mm DOUBLE GATE POST: 88.9MM O.D. SCH. 40 STEEL PIPE COMPLETE WITH CAP FOR END POST, ONE TENSION BAR BRACE AND TENSION BANDS, ONE 10 DIA. TRUSS ROD AND TURNBUCKLE ASSEMBLY.

4000MM DOUBLE GATE POST: 114.3MM O.D. SCH. 40 STEEL PIPE COMPLETE WITH CAP FOR END POST, ONE TENSION BAR BRACE AND TENSION BANDS, ONE 10 DIA. TRUSS ROD AND TURNBUCKLE ASSEMBLY.

ITEM S11 3000mm DOUBLE GATE FRAME: 42.2MM O.D. SCH. 40 STEEL PIPE.
4000mm DOUBLE GATE FRAME: 48.3MM O.D. SCH. 40 STEEL PIPE.

ITEM S12 3000mm DOUBLE GATE VERTICAL PIPE BRACE: 42.2MM O.D. SCH. 40 STEEL PIPE.
4000mm DOUBLE GATE VERTICAL PIPE BRACE: 48.3MM O.D. SCH. 40 STEEL PIPE.

ITEM S13 3 STRANDS OF BARBED WIRE HOT-DIP GALVANIZED. BARBED WIRE SHALL BE GALVANIZED STEEL WITH 2.5MM DIA., BARBS 150MM APART, 4 SPIKES.

ITEM S14 BRACING PIPE: 42.2MM O.D. SCH. 40 STEEL PIPE INCLUDING SLIP-ON COUPLING SLEEVE AND SCREWS FOR EACH STD LENGTH.

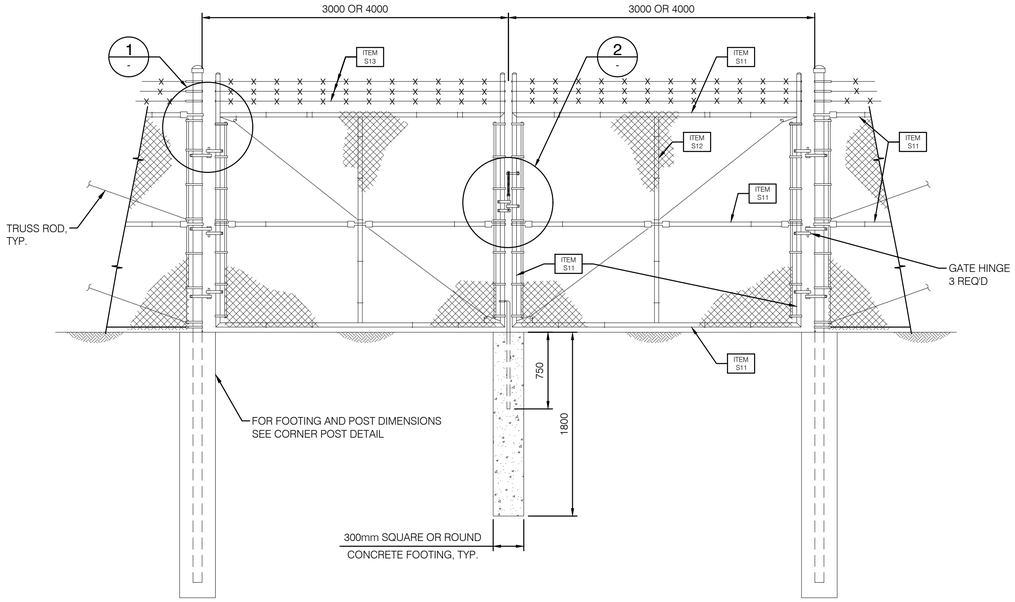

TYPICAL DOUBLE GATE DETAIL
1:30

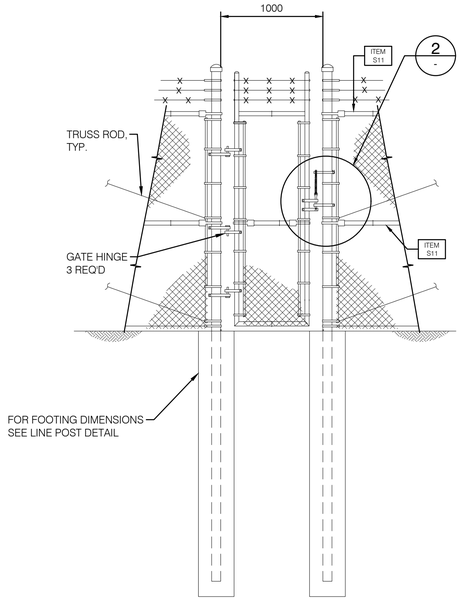

TYPICAL MAN GATE DETAIL
1:30

ADAM BROWN
MANAGER , DEVELOPMENT REVIEW RURAL
PLANNING, DEVELOPMENT & BUILDING SERVICES
DEPARTMENT, CITY OF OTTAWA

APPROVED
By Adam Brown at 1:53 pm, Nov 23, 2026

FOR PERMITTING

SCALE 1:15 250 0 500 1000 1500 mm

SCALE 1:30 0.5 0 1 2 3 m

DRAWING No.	DESCRIPTION	REV	DESCRIPTION	PREPARED BY	CHECKED BY	DATE
		AE	FOR PERMITTING	B. THOMAS	V. BRUNELLE P.E.O NO. 100617887	2026-11-18
		AD	FOR PERMITTING	B. THOMAS	V. BRUNELLE P.E.O NO. 100617887	2026-06-29
		AC	FOR PERMITTING	B. THOMAS	V. BRUNELLE P.E.O NO. 100617887	2025-11-05
		AB	FOR PERMITTING	E. AMELI	M. SHAHRAKI	2025-06-19
-	-	AA	FOR COMMENTS	A. SIEW	F. HATAMI, P.ENG, P.E.O NO.100628041	2025-03-03
REFERENCE DRAWINGS		REVISIONS				

SEAL: LICENSED PROFESSIONAL ENGINEER — V. BRUNELLE 100617887 — PROVINCE OF ONTARIO — 2026-11-18

CLIENT: Evolugen by Brookfield Renewable

PROJECT: SOUTH MARCH BESS
2556 MARCHURST ROAD, OTTAWA

TITLE: CIVIL
SECURITY FENCING
CHAIN LINK FENCE
STANDARD DETAILS

PREPARED BY:	DRAFTED BY:
B. THOMAS	G. NORMAND
CHECKED BY:	APPROVED BY:
V. BRUNELLE	V. BRUNELLE
SCALE:	DATE:
AS SHOWN	2025-02-06

DRAWING No.: 7154023-100000-41-D90-0001 | SHEET: 01 | SIZE: A1 | REV. AE

0 1 2 3 4 5 6 7 8 9 10 cm

G:\7154\023\40_ING_ENG\41_CIVIL\DESS_DWGS\EN _COURS_IN PROGRESS\GN\7154023-100000-41-D90-0001_GN.DWG

CITY FILE no.: D07-12-25-0096 PLAN no.: 19401

BY:BOURGUIGNON, EMILY
PRINTED:2026-11-18 14:30:42