EROSION AND SEDIMENT CONTROL MEASURES:

** CONTRACTOR IS RESPONSIBLE FOR ALL INSTALLATION, MONITORING, REPAIR AND REMOVAL OF ALL EROSION AND SEDIMENT CONTROL FEATURES **

1. PRIOR TO START OF CONSTRUCTION:

- PRIOR TO THE REMOVAL OF ANY VEGETATIVE COVER, MOVING OF SOIL AND CONSTRUCTION:
- INSTALL SILT FENCE IMMEDIATELY DOWNSTREAM FROM AREAS TO BE DISTURBED (SEE PLAN FOR LOCATION).
- INSTALL GEOSOCK INSERTS WITH AN OVERFLOW IN ALL THE DOWNSTREAM CATCHBASINS AND MANHOLES
- INSTALL SILTSACK FILTERS IN ALL CONCRETE CATCH BASINS STRUCTURES
- INSPECT MEASURES IMMEDIATELY AFTER INSTALLATION.

2. DURING CONSTRUCTION:

- WORK TO BE DONE IN THE VICINITY OF MAJOR WATERWAYS TO BE CARRIED OUT FROM JULY TO SEPTEMBER ONLY.
- MINIMIZE THE EXTENT OF DISTURBED AREAS AND THE DURATION OF EXPOSURE.
- PROTECT DISTURBED AREAS FROM RUNOFF.
- PROVIDE TEMPORARY COVER SUCH AS SEEDING OR MULCHING IF DISTURBED AREA WILL NOT BE REHABILITATED WITHIN 30 DAYS.
- INSPECT SILT FENCES, FILTER CLOTHS AND CATCH BASIN SUMPS WEEKLY AND AFTER EVERY MAJOR STORM EVENT. CLEAN AND REPAIR WHEN NECESSARY.
- CONSTRUCT SWALES AS PER DETAIL.
- PLAN TO BE REVIEWED AND REVISED AS REQUIRED DURING CONSTRUCTION
- EROSION CONTROL FENCING TO BE ALSO INSTALLED AROUND THE BASE OF ALL STOCKPILES.
- DO NOT LOCATE TOPSOIL PILES AND EXCAVATION MATERIAL CLOSER THAN 2.5m FROM ANY PAVED SURFACE, OR ONE WHICH IS TO BE PAVED BEFORE THE PILE IS REMOVED. ALL TOPSOIL PILES ARE TO BE SEEDED IF THEY ARE TO REMAIN ON SITE LONG ENOUGH FOR SEEDS TO GROW (LONGER THAN 30 DAYS).
- CONTROL WIND-BLOWN DUST OFF SITE TO ACCEPTABLE LEVELS BY SEEDING TOPSOIL PILES AND OTHER AREAS TEMPORARILY (PROVIDE WATERING AS REQUIRED).
- ALL EROSION CONTROL STRUCTURE TO REMAIN IN PLACE UNTIL ALL DISTURBED GROUND SURFACES HAVE BEEN STABILIZED EITHER BY PAVING OR RESTORATION OF VEGETATIVE GROUND COVER.
- NO ALTERNATE METHODS OF EROSION PROTECTION SHALL BE PERMITTED UNLESS APPROVED BY THIS CONSULTING ENGINEER AND THE CITY DEPARTMENT OF PUBLIC WORKS.
- CONTRACTOR RESPONSIBLE FOR CITY ROADWAY AND SIDEWALK TO BE CLEANED OF ALL SEDIMENT FROM VEHICULAR TRACKING ETC. AT THE END OF EACH WORK DAY.
- PROVIDE GRAVEL ENTRANCE WHEREVER EQUIPMENT LEAVES THE SITE TO PREVENT MUD TRACKING ONTO PAVED SURFACES. GRAVEL BED SHALL BE A MINIMUM OF 15m LONG, 4M WIDE AND 0.3m DEEP AND SHALL CONSIST OF COARSE (50mm CRUSHERT-RUN LIMESTONE) MATERIAL. MAINTAIN GRAVEL ENTRANCE IN CLEAN CONDITION.
- DURING WET CONDITIONS, TIRES OF ALL VEHICLES/EQUIPMENT LEAVING THE SITE ARE TO BE SCRAPED.
- ANY MUD/MATERIAL TRACKED ONTO THE ROAD SHALL BE REMOVED IMMEDIATELY BY HAND OR RUBBER TIRE LOADER.
- TAKE ALL NECESSARY STEPS TO PREVENT BUILDING MATERIAL, CONSTRUCTION DEBRIS OR WASTE BEING SPILLED OR TRACKED ONTO ABUTTING PROPERTIES OR PUBLIC STREETS DURING CONSTRUCTION AND PROCEED IMMEDIATELY TO CLEAN UP ANY AREAS SO AFFECTED.

3. AFTER CONSTRUCTION:

- PROVIDE PERMANENT COVER CONSISTING OF TOPSOIL AND SEED TO DISTURBED AREAS.
- REMOVE STRAW BALE FLOW CHECK DAMS, SILT FENCES AND FILTER CLOTHS ON CATCH BASINS AND MANHOLE COVERS AFTER DISTURBED AREAS HAVE BEEN REHABILITATED AND STABILIZED.
- INSPECT AND CLEAN CATCH BASIN SUMPS AND STORM SEWERS.

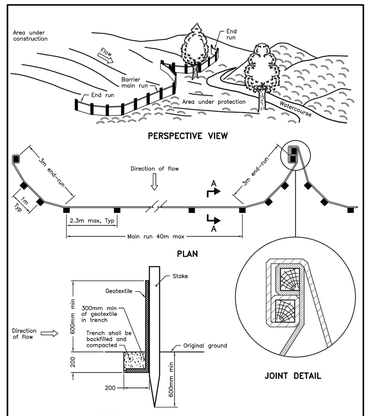

NOTE:
A All dimensions are in millimetres unless otherwise shown.

ONTARIO PROVINCIAL STANDARD DRAWING	Nov 2015	Rev 2
LIGHT–DUTY SILT FENCE BARRIER		OPSD 219.110

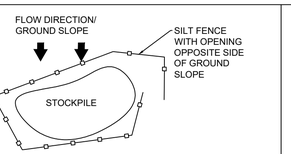

STOCKPILE EROSION PROTECTION
N.T.S.

SWALE - TYPICAL SECTION
(N.T.S.)

LEGEND:

- EXISTING PROPERTY LINE TO REMAIN
- PROPOSED CURB
- PROPOSED DEPRESSED CURB
- PROPOSED TERRACING (3:1 MIN.)
- PROPOSED SILT FENCE AS PER OPSD 219.110
- PROPOSED FENCE
- PROPOSED DOOR ENTRANCE/EXIT
- PROPOSED GRASS AREA (100mm TOP SOIL & SOD)
- PROPOSED CONCRETE FEATURES/SLAB
- PROPOSED HEAVY DUTY ASPHALT
- PROPOSED LIGHT DUTY ASPHALT
- PROPOSED RIP RAP
- ×50.00 PROPOSED ELEVATION
- ×50.00HP PROPOSED HIGH POINT ELEVATION
- ×50.00S PROPOSED SWALE ELEVATION
- ×50.00BC PROPOSED BOTTOM OF CURB ELEVATION
- ×50.00TC PROPOSED TOP OF CURB ELEVATION
- ×50.00EX MATCH INTO EXISTING ELEVATION
- ×70.19 EXISTING ELEVATION
- PROPOSED OVERLAND MAJOR FLOW ROUTE
- SUB SUB SUB PROPOSED 100mmØ PERFORATED SUBDRAIN
- STM STM STM PROPOSED STORM SEWER
- SAN SAN SAN PROPOSED SANITARY SEWER
- WTR WTR WTR PROPOSED WATERMAIN
- STM STM STM EXISTING STORM SEWER
- SAN SAN SAN EXISTING SANITARY SEWER
- WTR WTR WTR EXISTING WATERMAIN
- GAS GAS GAS EXISTING GAS LINE
- EXISTING MANHOLE
- EXISTING CATCHBASIN
- PROPOSED CATCHBASIN-MANHOLE/CATCHBASIN
- PROPOSED MANHOLE
- PROPOSED CURB STOP
- PROPOSED PIPE INSULATION
- PROPOSED 100 YEAR HIGH WATER LEVEL
- STORM WATERSHED EXTENT
- WS-XX CONTROLLED — WATERSHED NAME
- AREA — RUNOFF — RUNOFF COEFFICIENT
- AREA IN HECTARES

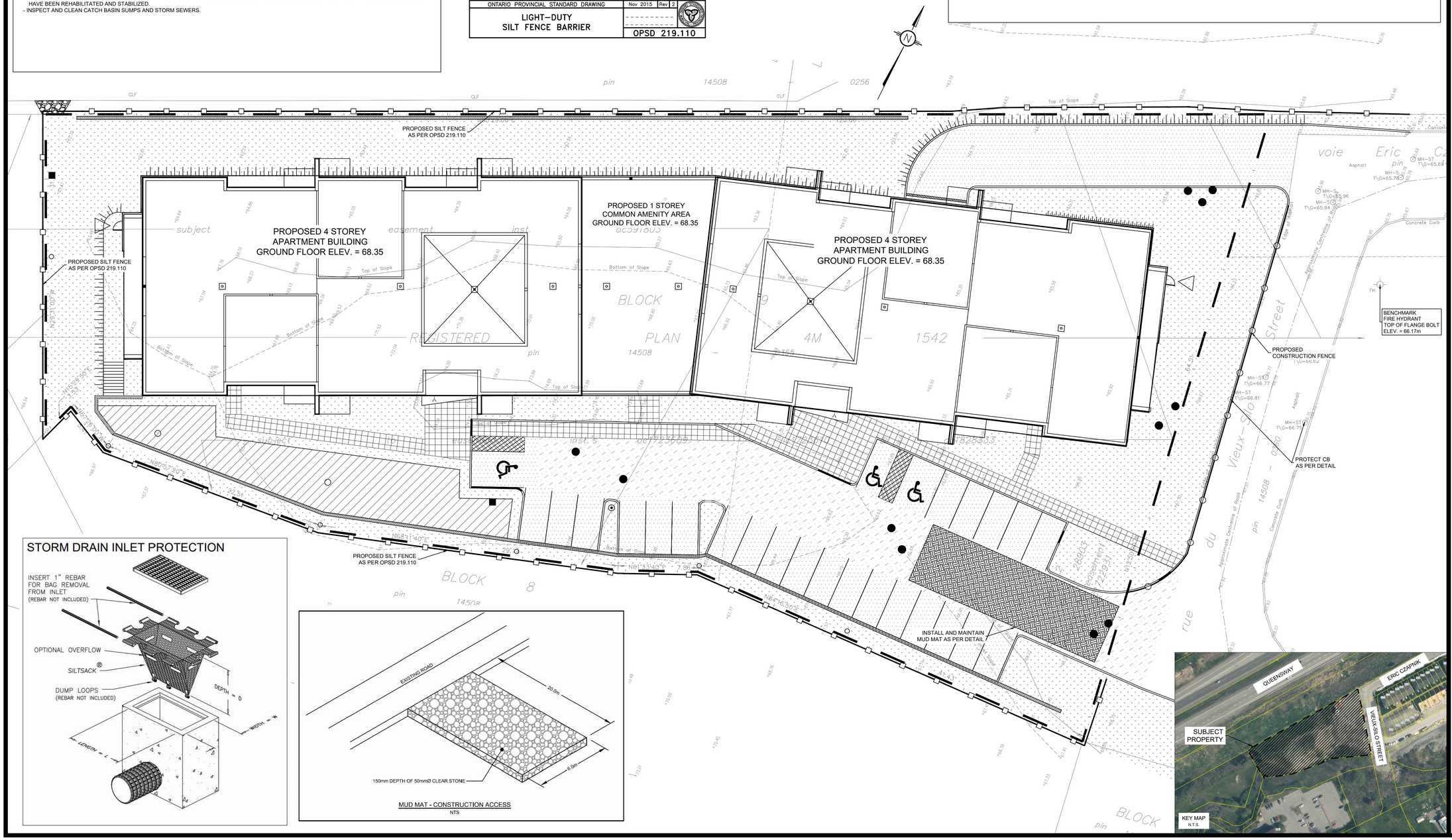

MUD MAT - CONSTRUCTION ACCESS
NTS

USE AND INTERPRETATION OF DRAWINGS

GENERAL CONDITIONS OF THE CONTRACT FOR CONSTRUCTION ARE PART OF THE CONTRACT DOCUMENTS AND DESCRIBE USE AND INTENT OF THE DRAWING. THE CONTRACT DOCUMENTS INCLUDE NOT ONLY THE DRAWINGS, BUT ALSO THE OWNER-CONTRACTOR AGREEMENTS, CONDITIONS OF THE CONTRACT, THE SPECIFICATIONS, ADDENDA, AND MODIFICATIONS ISSUED AFTER EXECUTION OF THE CONTRACT. THESE CONTRACT DOCUMENTS ARE COMPLEMENTARY, AND WHAT IS REQUIRED BY ANY ONE SHALL BE BINDING AS IF REQUIRED BY ALL. WORK NOT COMPLETELY DELINEATED HEREON SHALL BE CONSTRUCTED OF THE SAME MATERIALS AND DETAILED SIMILARLY AS WORK SHOWN MORE COMPLETELY ELSEWHERE IN THE CONTRACT DOCUMENTS.

BY USE OF THE DRAWINGS FOR CONSTRUCTION OF THE PROJECT, THE OWNER CONFIRMS THAT HE HAS REVIEWED AND APPROVED THE DRAWINGS. THE CONTRACTOR CONFIRMS THAT HE HAS VISITED THE SITE, FAMILIARIZED HIMSELF WITH THE LOCAL CONDITIONS, VERIFIED FIELD DIMENSIONS AND CORRELATED HIS OBSERVATIONS WITH THE REQUIREMENTS OF THE CONTRACT DOCUMENTS.

AS INSTRUMENTS OF SERVICE, ALL DRAWINGS, SPECIFICATIONS, CADD FILES OR OTHER ELECTRONIC MEDIA AND COPIED THERE OF FURNISHED BY THE ENGINEER ARE HIS PROPERTY. THEY ARE TO BE USED ONLY FOR THIS PROJECT AND ARE NOT TO BE USED ON ANY OTHER PROJECT, INCLUDING REPEATS OF THE PROJECT. CHANGES TO THE DRAWINGS MAY ONLY BE MADE BY THE ENGINEER.

UNLESS THE REVISION TITLE IS "ISSUED FOR CONSTRUCTION", THESE DRAWINGS SHALL BE CONSIDERED PRELIMINARY AND SHALL NOT BE USED AS A CONSTRUCTION DOCUMENT.

THESE DRAWINGS ILLUSTRATES THE WORK TO BE DONE. THE ENGINEER IS NOT RESPONSIBLE FOR THE MEANS, METHODS, TECHNIQUES, SEQUENCES, AND PROCEDURES USED TO DO THE WORK, OR THE SAFETY ASPECTS OF CONSTRUCTION, AND NOTHING ON THESE DRAWINGS EXPRESSED OR IMPLIED CHANGES THIS CONDITION. CONTRACTOR SHALL DETERMINE ALL CONDITIONS AT THE SITE AND SHALL BE RESPONSIBLE FOR KNOWING HOW THEY AFFECT THE WORK. SUBMITTAL OF A BID TO PERFORM THIS WORK IS ACKNOWLEDGEMENT OF THE RESPONSIBILITIES, AND THAT THEY HAVE BEEN FULLY CONSIDERED IN PLANNING OF THE WORK, AND THE BID PRICE. NO CLAIMS FOR EXTRA CHARGES DUE TO THESE CONDITIONS WILL BE FORTHCOMING.

UNAUTHORIZED CHANGES:

IN THE EVENT THE CLIENT, THE CLIENT'S CONTRACTORS OR SUBCONTRACTORS, OR ANYONE FOR WHOM THE CLIENT IS LEGALLY LIABLE MAKES OR PERMITS TO BE MADE ANY CHANGES TO ANY REPORTS, PLANS, SPECIFICATIONS OR OTHER CONSTRUCTION DOCUMENTS PREPARED BY LRL ASSOCIATES LTD. (LRL) WITHOUT OBTAINING LRL'S PRIOR WRITTEN CONSENT, THE CLIENT SHALL ASSUME FULL RESPONSIBILITY FOR THE RESULTS OF SUCH CHANGES. THEREFORE THE CLIENT AGREES TO WAIVE ANY CLAIM AGAINST LRL AND TO RELEASE LRL FROM ANY LIABILITY ARISING DIRECTLY OR INDIRECTLY FROM SUCH UNAUTHORIZED CHANGES.

IN ADDITION, THE CLIENT AGREES, TO THE FULLEST EXTENT PERMITTED BY LAW, TO INDEMNIFY AND HOLD HARMLESS LRL FROM ANY DAMAGES, LIABILITIES OR COST, INCLUDING REASONABLE ATTORNEY'S FEES AND COST OF DEFENSE, ARISING FROM SUCH CHANGES.

IN ADDITION, THE CLIENT AGREES TO INCLUDE IN ANY CONTRACTS FOR CONSTRUCTION APPROPRIATE LANGUAGE THAT PROHIBITS THE CONTRACTOR OR ANY SUBCONTRACTORS OF ANY TIER FROM MAKING ANY CHANGES OR MODIFICATIONS TO LRL'S CONSTRUCTION DOCUMENTS WITHOUT THE PRIOR WRITTEN APPROVAL OF LRL AND THAT FURTHER REQUIRES THE CONTRACTOR TO INDEMNIFY BOTH LRL AND THE CLIENT FROM ANY LIABILITY OR COST ARISING FROM SUCH CHANGES MADE WITHOUT SUCH PROPER AUTHORIZATION.

GENERAL NOTES:

EXISTING SERVICES AND UTILITIES SHOWN ON THESE DRAWINGS ARE TAKEN FROM THE BEST AVAILABLE RECORDS, BUT MAY NOT BE COMPLETE OR TO DATE. CONTRACTOR SHALL VERIFY IN FIELD FOR LOCATION AND ELEVATION OF PIPES AND CHECK WITH THE UTILITY COMPANIES BEFORE DIGGING OR PERFORMING WORK.

CONTRACTOR IS ADVISED TO COLLECT INFORMATION ON SOIL CONDITIONS BEFORE START OF CONSTRUCTION.

THE ENGINEER WAIVES ANY AND ALL RESPONSIBILITY AND LIABILITY FOR PROBLEMS WHICH ARISE FROM FAILURE TO FOLLOW THESE PLANS, SPECIFICATIONS AND THE DESIGN INTENT THEY CONVEY, OR FOR PROBLEMS WHICH ARISE FROM OTHERS' FAILURE TO OBTAIN AND/OR FOLLOW THE ENGINEER'S GUIDANCE WITH RESPECT TO ANY ERRORS, OMISSIONS, INCONSISTENCIES AMBIGUITIES OR CONFLICTS WHICH ARE ALLEGED.

CONTRACTOR TO VERIFY ALL DIMENSIONS AND NOTIFY THE ENGINEER OF ANY DISCREPANCIES BEFORE WORK COMMENCES. DO NOT SCALE DRAWINGS.

5m 2 0 5m
SCALE: 1:200

NOT FOR CONSTRUCTION TENDER OR PERMIT

No.	REVISIONS	BY	DATE
01	ISSUED FOR APPROVAL	A.S.	17 JUL 2020

LICENSED PROFESSIONAL ENGINEER
M. BASNET
100501996
2020-07-17
PROVINCE OF ONTARIO

NOT AUTHENTIC UNLESS SIGNED AND DATED

LRL
ENGINEERING | INGÉNIERIE
5430 Canotek Road I Ottawa, ON, K1J 9G2
www.lrl.ca I (613) 842-3434

CLIENT
LANDRIC HOMES INC.

DESIGNED BY:	DRAWN BY:	APPROVED BY:
A.S.	A.S.	M.B.

PROJECT
BLOCK 9
APARTMENT BUILDINGS
ERIC CZAPNIK WAY, ORLEANS

DRAWING TITLE
EROSION AND SEDIMENT CONTROL PLAN

PROJECT NO.
200041

DATE
APRIL 2020

C101

GENERALGRADING NOTES

1. ANY MODIFICATIONS IN ELEVATION BETWEEN THE SURVEY AND CONSTRUCTION THAT WILL AFFECT THE PROJECT ARE TO BE COMMUNICATED WITH THE ENGINEER PRIOR TO START OF CONSTRUCTION.
2. PRIOR TO START OF ANY WORK ON SITE, THE CONTRACTOR IS RESPONSIBLE TO FIELD VERIFY EXISTING GRADES AND ENSURE OVERLAND DRAINAGE IS FEASIBLE WITH ACTUAL SITE CONDITIONS.
3. ANY DISCREPANCIES ARE TO BE COMMUNICATED WITH THE ENGINEER PRIOR TO CONSTRUCTION.
4. NO EXCESS DRAINAGE, EITHER DURING OR AFTER CONSTRUCTION, WILL BE DIRECTED TOWARDS NEIGHBOURING PROPERTIES.
5. NO ALTERATION OF EXISTING GRADES AND DRAINAGE PATTERNS ON PROPERTY BOUNDARIES.
6. ENSURE POSITIVE DRAINAGE AWAY FROM FOUNDATION.

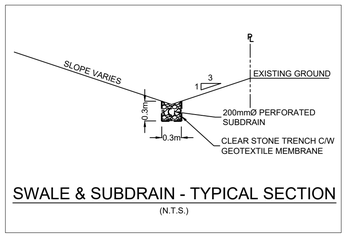

SWALE & SUBDRAIN - TYPICAL SECTION

(N.T.S.)

LEGEND:

- EXISTING PROPERTY LINE TO REMAIN
- PROPOSED CURB
- PROPOSED DEPRESSED CURB
- PROPOSED TERRACING (3:1 MIN.)
- PROPOSED SILT FENCE AS PER OPSD 219.110
- PROPOSED FENCE
- PROPOSED DOOR ENTRANCE/EXIT
- PROPOSED GRASS AREA (100mm TOP SOIL & SOD)
- PROPOSED CONCRETE FEATURES/SLAB
- PROPOSED HEAVY DUTY ASPHALT
- PROPOSED LIGHT DUTY ASPHALT
- PROPOSED RIP RAP
- ×50.00 PROPOSED ELEVATION
- ×50.00HP PROPOSED HIGH POINT ELEVATION
- ×50.00S PROPOSED SWALE ELEVATION
- ×50.00BC PROPOSED BOTTOM OF CURB ELEVATION
- ×50.00TC PROPOSED TOP OF CURB ELEVATION
- ×50.00EX MATCH INTO EXISTING ELEVATION
- ×70.19 EXISTING ELEVATION
- PROPOSED OVERLAND MAJOR FLOW ROUTE
- SUB — PROPOSED 100mmØ PERFORATED SUBDRAIN
- STM — PROPOSED STORM SEWER
- SAN — PROPOSED SANITARY SEWER
- WTR — PROPOSED WATERMAIN
- STM — EXISTING STORM SEWER
- SAN — EXISTING SANITARY SEWER
- WTR — EXISTING WATERMAIN
- GAS — EXISTING GAS LINE
- EXISTING MANHOLE
- EXISTING CATCHBASIN
- PROPOSED CATCHBASIN-MANHOLE/CATCHBASIN
- PROPOSED MANHOLE
- PROPOSED CURB STOP
- PROPOSED PIPE INSULATION
- PROPOSED 100 YEAR HIGH WATER LEVEL
- STORM WATERSHED EXTENT
- WS-XX — WATERSHED NAME
- CONTROLLED — RUNOFF COEFFICIENT
- AREA — AREA IN HECTARES

USE AND INTERPRETATION OF DRAWINGS

GENERAL CONDITIONS OF THE CONTRACT FOR CONSTRUCTION ARE PART OF THE CONTRACT DOCUMENTS AND DESCRIBE USE AND INTENT OF THE DRAWING. THE CONTRACT DOCUMENTS INCLUDE NOT ONLY THE DRAWINGS, BUT ALSO THE OWNER-CONTRACTOR AGREEMENTS, CONDITIONS OF THE CONTRACT, THE SPECIFICATIONS, ADDENDA, AND MODIFICATIONS ISSUED AFTER EXECUTION OF THE CONTRACT. THESE CONTRACT DOCUMENTS ARE COMPLEMENTARY, AND WHAT IS REQUIRED BY ANY ONE SHALL BE BINDING AS IF REQUIRED BY ALL. WORK NOT COMPLETELY DELINEATED HEREON SHALL BE CONSTRUCTED OF THE SAME MATERIALS AND DETAILED SIMILARLY AS WORK SHOWN MORE COMPLETELY ELSEWHERE IN THE CONTRACT DOCUMENTS.

BY USE OF THE DRAWINGS FOR CONSTRUCTION OF THE PROJECT, THE OWNER CONFIRMS THAT HE HAS REVIEWED AND APPROVED THE DRAWINGS. THE CONTRACTOR CONFIRMS THAT HE HAS VISITED THE SITE, FAMILIARIZED HIMSELF WITH THE LOCAL CONDITIONS, VERIFIED FIELD DIMENSIONS AND CORRELATED HIS OBSERVATIONS WITH THE REQUIREMENTS OF THE CONTRACT DOCUMENTS.

AS INSTRUMENTS OF SERVICE, ALL DRAWINGS, SPECIFICATIONS, CADD FILES OR OTHER ELECTRONIC MEDIA AND COPIED THERE OF FURNISHED BY THE ENGINEER ARE HIS PROPERTY. THEY ARE TO BE USED ONLY FOR THIS PROJECT AND ARE NOT TO BE USED ON ANY OTHER PROJECT, INCLUDING REPEATS OF THE PROJECT. CHANGES TO THE DRAWINGS MAY ONLY BE MADE BY THE ENGINEER.

UNLESS THE REVISION TITLE IS "ISSUED FOR CONSTRUCTION", THESE DRAWINGS SHALL BE CONSIDERED PRELIMINARY AND SHALL NOT BE USED AS A CONSTRUCTION DOCUMENT.

THESE DRAWINGS ILLUSTRATES THE WORK TO BE DONE. THE ENGINEER IS NOT RESPONSIBLE FOR THE MEANS, METHODS, TECHNIQUES, SEQUENCES, AND PROCEDURES USED TO DO THE WORK, OR THE SAFETY ASPECTS OF CONSTRUCTION, AND NOTHING ON THESE DRAWINGS EXPRESSED OR IMPLIED CHANGES THIS CONDITION. CONTRACTOR SHALL DETERMINE ALL CONDITIONS AT THE SITE AND SHALL BE RESPONSIBLE FOR KNOWING HOW THEY AFFECT THE WORK. SUBMITTAL OF A BID TO PERFORM THIS WORK IS ACKNOWLEDGEMENT OF THE RESPONSIBILITIES, AND THAT THEY HAVE BEEN FULLY CONSIDERED IN PLANNING OF THE WORK, AND THE BID PRICE. NO CLAIMS FOR EXTRA CHARGES DUE TO THESE CONDITIONS WILL BE FORTHCOMING.

UNAUTHORIZED CHANGES:

IN THE EVENT THE CLIENT, THE CLIENT'S CONTRACTORS OR SUBCONTRACTORS, OR ANYONE FOR WHOM THE CLIENT IS LEGALLY LIABLE MAKES OR PERMITS TO BE MADE ANY CHANGES TO ANY REPORTS, PLANS, SPECIFICATIONS OR OTHER CONSTRUCTION DOCUMENTS PREPARED BY LRL ASSOCIATES LTD. (LRL) WITHOUT OBTAINING LRL'S PRIOR WRITTEN CONSENT, THE CLIENT SHALL ASSUME FULL RESPONSIBILITY FOR THE RESULTS OF SUCH CHANGES. THEREFORE THE CLIENT AGREES TO WAIVE ANY CLAIM AGAINST LRL AND TO RELEASE LRL FROM ANY LIABILITY ARISING DIRECTLY OR INDIRECTLY FROM SUCH UNAUTHORIZED CHANGES.

IN ADDITION, THE CLIENT AGREES, TO THE FULLEST EXTENT PERMITTED BY LAW, TO INDEMNIFY AND HOLD HARMLESS LRL FROM ANY DAMAGES, LIABILITIES OR COST, INCLUDING REASONABLE ATTORNEY'S FEES AND COST OF DEFENSE, ARISING FROM SUCH CHANGES.

IN ADDITION, THE CLIENT AGREES TO INCLUDE IN ANY CONTRACTS FOR CONSTRUCTION APPROPRIATE LANGUAGE THAT PROHIBITS THE CONTRACTOR OR ANY SUBCONTRACTORS OF ANY TIER FROM MAKING ANY CHANGES OR MODIFICATIONS TO LRL'S CONSTRUCTION DOCUMENTS WITHOUT THE PRIOR WRITTEN APPROVAL OF LRL AND THAT FURTHER REQUIRES THE CONTRACTOR TO INDEMNIFY BOTH LRL AND THE CLIENT FROM ANY LIABILITY OR COST ARISING FROM SUCH CHANGES MADE WITHOUT SUCH PROPER AUTHORIZATION.

GENERAL NOTES:

EXISTING SERVICES AND UTILITIES SHOWN ON THESE DRAWINGS ARE TAKEN FROM THE BEST AVAILABLE RECORDS, BUT MAY NOT BE COMPLETE OR TO DATE. CONTRACTOR SHALL VERIFY IN FIELD FOR LOCATION AND ELEVATION OF PIPES AND CHECK WITH THE UTILITY COMPANIES BEFORE DIGGING OR PERFORMING WORK.

CONTRACTOR IS ADVISED TO COLLECT INFORMATION ON SOIL CONDITIONS BEFORE START OF CONSTRUCTION.

THE ENGINEER WAIVES ANY AND ALL RESPONSIBILITY AND LIABILITY FOR PROBLEMS WHICH ARISE FROM FAILURE TO FOLLOW THESE PLANS, SPECIFICATIONS AND THE DESIGN INTENT THEY CONVEY, OR FOR PROBLEMS WHICH ARISE FROM OTHERS' FAILURE TO OBTAIN AND/OR FOLLOW THE ENGINEER'S GUIDANCE WITH RESPECT TO ANY ERRORS, OMISSIONS, INCONSISTENCIES AMBIGUITIES OR CONFLICTS WHICH ARE ALLEGED.

CONTRACTOR TO VERIFY ALL DIMENSIONS AND NOTIFY THE ENGINEER OF ANY DISCREPANCIES BEFORE WORK COMMENCES. DO NOT SCALE DRAWINGS.

5m 2 0 5m

SCALE: 1:200

NOT FOR CONSTRUCTION TENDER OR PERMIT

No.	REVISIONS	BY	DATE
01	ISSUED FOR APPROVAL	A.S.	17 JUL 2020

LICENSED PROFESSIONAL ENGINEER M. BASNET 100501996 2020-07-17 PROVINCE OF ONTARIO

NOT AUTHENTIC UNLESS SIGNED AND DATED

LRL
ENGINEERING | INGÉNIERIE
5430 Canotek Road I Ottawa, ON, K1J 9G2
www.lrl.ca I (613) 842-3434

CLIENT
LANDRIC HOMES INC.

DESIGNED BY:	DRAWN BY:	APPROVED BY:
A.S.	A.S.	M.B.

PROJECT
BLOCK 9
APARTMENT BUILDINGS
ERIC CZAPNIK WAY, ORLEANS

DRAWING TITLE
GRADING AND DRAINAGE PLAN

PROJECT NO.
200041

DATE
APRIL 2020

C301

NOTES: GENERAL

1. CONTRACTOR IS RESPONSIBLE FOR ALL LAYOUT FOR CONSTRUCTION PURPOSES.
2. ALL ELEVATIONS ARE GEODETIC AND UTILIZE METRIC UNITS.
3. JOB BENCH MARK - LOCATED AT FIRE HYDRANT. TOP OF FLANGE BOT ELEVATION = 66.17 m CONFIRM WITH LRL PRIOR TO UTILIZATION.
4. ALL GROUND SURFACES SHALL BE EVENLY GRADED WITHOUT PONDING AREAS AND WITHOUT LOW POINTS EXCEPT WHERE APPROVED SWALE, CATCH BASIN OUTLETS AND/OR STORM DETENTION AREAS ARE PROVIDED.
5. STRIP AND REMOVE ALL TOPSOIL FROM IMPROVED AREAS.
6. COORDINATE AND SCHEDULE ALL WORK WITH OTHER TRADES AND CONTRACTORS.
7. ALL EDGES OF DISTURBED PAVEMENT SHALL BE SAW CUT TO FORM A CLEAN STRAIGHT LINE PRIOR TO PLACING NEW PAVEMENT. PAVEMENT REINSTATEMENT SHALL BE WITH STEP JOINTS OF 500mm WIDTH MINIMUM.
8. CURBS TO BE BARRIER, CONSTRUCTED AS PER OPSD 600.110.
9. ALL MATERIAL SUPPLIED AND PLACED FOR PARKING LOT AND ACCESS ROAD CONSTRUCTION SHALL BE TO OPSS STANDARDS AND SPECIFICATIONS UNLESS OTHERWISE NOTED. CONSTRUCTION TO OPSS 206, 310 & 314. MATERIALS TO OPSS 1001, 1003 & 1010.
10. ABUTTING PROPERTY GRADE TO BE MATCHED.
11. OBTAIN AND PAY FOR ALL NECESSARY PERMITS AND APPROVALS FROM THE MUNICIPAL AUTHORITIES PRIOR TO COMMENCING CONSTRUCTION.
12. MINIMIZE DISTURBANCE TO EXISTING VEGETATION DURING THE EXECUTION OF ALL WORKS.
13. FILTER FABRIC TO BE INSTALLED AND MAINTAINED BETWEEN THE FRAME AND COVER OF ALL CATCHBASINS, CATCHBASIN MANHOLES AND MANHOLES DURING THE CONSTRUCTION PERIOD TO MINIMIZE SEDIMENTS ENTERING THE STORM SEWER SYSTEM. ALL GRASSED AREAS MUST BE COMPLETED PRIOR TO THE REMOVAL OF THE FILTER FABRIC IN THE DRAINAGE STRUCTURES.
14. REMOVE FROM SITE ALL EXCESS EXCAVATED MATERIAL UNLESS OTHERWISE DIRECTED FROM THE ENGINEER. EXCAVATE AND REMOVE ALL ORGANIC MATERIAL AND DEBRIS, IF ANY, LOCATED WITHIN THE PROPOSED BUILDING, PARKING AND ROADWAY LOCATIONS.
15. THE APPROVAL OF THIS PLAN DOES NOT EXEMPT THE CONTRACTOR FROM THE REQUIREMENTS TO OBTAIN THE VARIOUS PERMITS/APPROVALS REQUIRED TO COMPLETE A CONSTRUCTION PROJECT, SUCH AS BUT NOT LIMITED TO; ROAD CUT PERMITS, SEWER PERMITS, WATER PERMIT, ETC.
16. AT PROPOSED UTILITY CONNECTION POINTS AND CROSSINGS (I.E. STORM SEWER, SANITARY SEWER, WATER, ETC.) THE CONTRACTOR SHALL DETERMINE THE PRECISE LOCATION AND DEPTH OF EXISTING UTILITIES AND REPORT ANY DISCREPANCIES OR CONFLICTS TO THE ENGINEER BEFORE COMMENCING WORK.
17. ALL SIDEWALK CONSTRUCTION TO BE AS PER OPSD 310.010 & OPSD 310.050.

NOTES: SEWERS

1. SEWER BEDDING AS PER PIPE TRENCH DETAIL WITH GRANULAR 'A' BEDDING COMPACTED TO 95% OF ITS SPMDD.
2. ALL WORK SHALL BE PERFORMED, AS APPLICABLE IN ACCORDANCE WITH OPSS 407, AND 410.
3. CONTRACTOR TO CONFIRM ELEVATION OF EXISTING SEWERS AT PROPOSED CONNECTION POINTS AND REPORT ANY DISCREPANCIES TO THE ENGINEER BEFORE COMMENCING ANY WORK.
4. ALL SEWERS WITH LESS THAN 2.0m OF COVER ARE SUBJECT TO INSULATION DETAIL.

NOTES: WATER SERVICE

1. PROPOSED WATER SERVICE TO BE 2.4m BELOW GRADE, OR INSULATED AS PER DETAIL ON C901

LEGEND:

- EXISTING PROPERTY LINE TO REMAIN
- PROPOSED CURB
- PROPOSED DEPRESSED CURB
- PROPOSED TERRACING (3:1 MIN.)
- PROPOSED SILT FENCE AS PER OPSD 219.110
- PROPOSED FENCE
- PROPOSED DOOR ENTRANCE/EXIT
- PROPOSED GRASS AREA (100mm TOP SOIL & SOD)
- PROPOSED CONCRETE FEATURES/SLAB
- PROPOSED HEAVY DUTY ASPHALT
- PROPOSED LIGHT DUTY ASPHALT
- PROPOSED RIP RAP
- ×50.00 PROPOSED ELEVATION
- ×50.00HP PROPOSED HIGH POINT ELEVATION
- ×50.00S PROPOSED SWALE ELEVATION
- ×50.00BC PROPOSED BOTTOM OF CURB ELEVATION
- ×50.00TC PROPOSED TOP OF CURB ELEVATION
- ×50.00EX MATCH INTO EXISTING ELEVATION
- ×70.19 EXISTING ELEVATION
- PROPOSED OVERLAND MAJOR FLOW ROUTE
- SUB — PROPOSED 100mmØ PERFORATED SUBDRAIN
- STM — PROPOSED STORM SEWER
- SAN — PROPOSED SANITARY SEWER
- WTR — PROPOSED WATERMAIN
- STM — EXISTING STORM SEWER
- SAN — EXISTING SANITARY SEWER
- WTR — EXISTING WATERMAIN
- GAS — EXISTING GAS LINE
- EXISTING MANHOLE
- EXISTING CATCHBASIN
- PROPOSED CATCHBASIN-MANHOLE/CATCHBASIN
- PROPOSED MANHOLE
- PROPOSED CURB STOP
- PROPOSED PIPE INSULATION
- PROPOSED 100 YEAR HIGH WATER LEVEL
- STORM WATERSHED EXTENT
- WS-XX — WATERSHED NAME
- CONTROLLED — RUNOFF COEFFICIENT
- AREA — AREA IN HECTARES

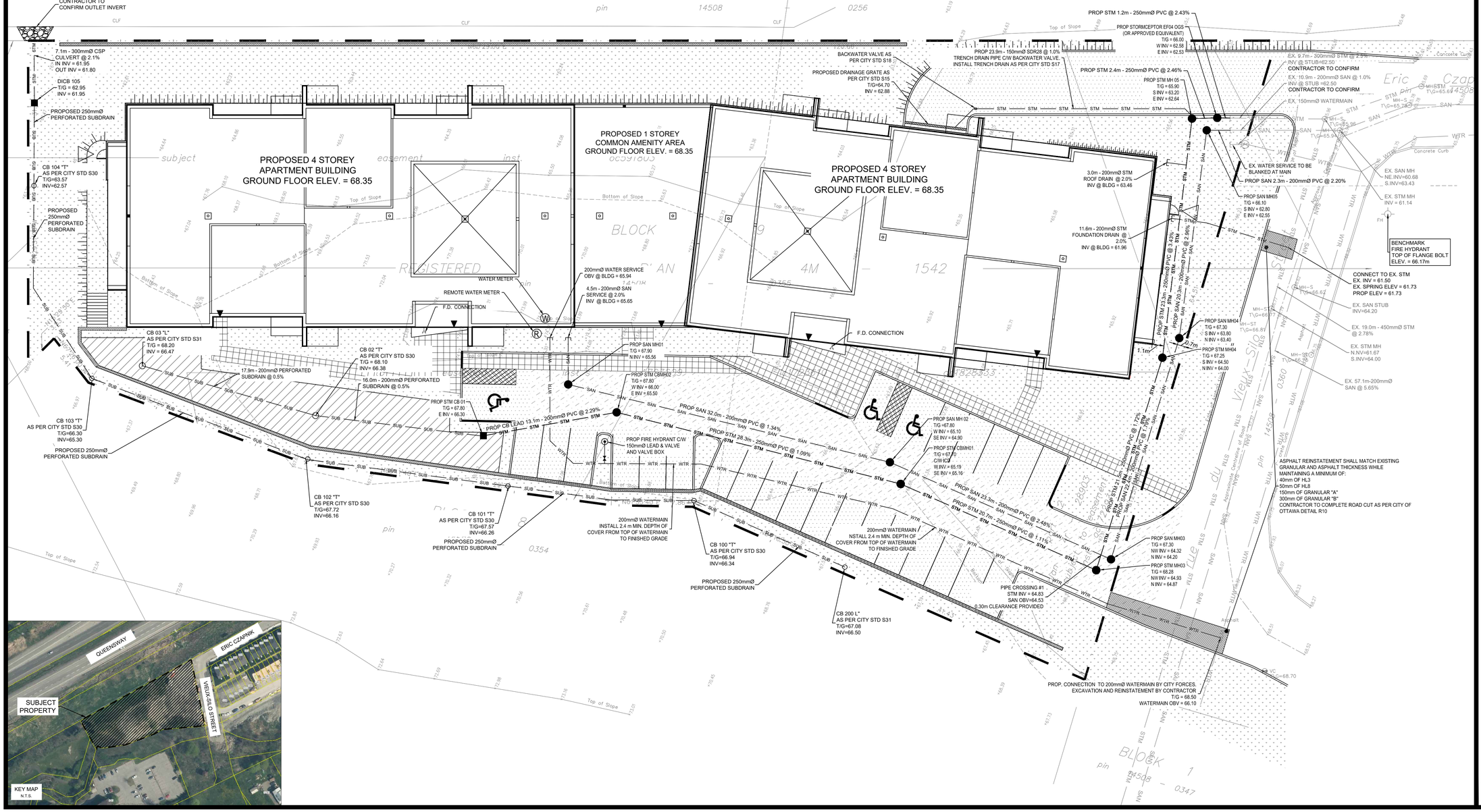

USE AND INTERPRETATION OF DRAWINGS

GENERAL CONDITIONS OF THE CONTRACT FOR CONSTRUCTION ARE PART OF THE CONTRACT DOCUMENTS AND DESCRIBE USE AND INTENT OF THE DRAWING. THE CONTRACT DOCUMENTS INCLUDE NOT ONLY THE DRAWINGS, BUT ALSO THE OWNER-CONTRACTOR AGREEMENTS, CONDITIONS OF THE CONTRACT, THE SPECIFICATIONS, ADDENDA, AND MODIFICATIONS ISSUED AFTER EXECUTION OF THE CONTRACT. THESE CONTRACT DOCUMENTS ARE COMPLEMENTARY, AND WHAT IS REQUIRED BY ANY ONE SHALL BE BINDING AS IF REQUIRED BY ALL. WORK NOT COMPLETELY DELINEATED HEREON SHALL BE CONSTRUCTED OF THE SAME MATERIALS AND DETAILED SIMILARLY AS WORK SHOWN MORE COMPLETELY ELSEWHERE IN THE CONTRACT DOCUMENTS.

BY USE OF THE DRAWINGS FOR CONSTRUCTION OF THE PROJECT, THE OWNER CONFIRMS THAT HE HAS REVIEWED AND APPROVED THE DRAWINGS. THE CONTRACTOR CONFIRMS THAT HE HAS VISITED THE SITE, FAMILIARIZED HIMSELF WITH THE LOCAL CONDITIONS, VERIFIED FIELD DIMENSIONS AND CORRELATED HIS OBSERVATIONS WITH THE REQUIREMENTS OF THE CONTRACT DOCUMENTS.

AS INSTRUMENTS OF SERVICE, ALL DRAWINGS, SPECIFICATIONS, CADD FILES OR OTHER ELECTRONIC MEDIA AND COPIED THERE OF FURNISHED BY THE ENGINEER ARE HIS PROPERTY. THEY ARE TO BE USED ONLY FOR THIS PROJECT AND ARE NOT TO BE USED ON ANY OTHER PROJECT, INCLUDING REPEATS OF THE PROJECT. CHANGES TO THE DRAWINGS MAY ONLY BE MADE BY THE ENGINEER.

UNLESS THE REVISION TITLE IS "ISSUED FOR CONSTRUCTION", THESE DRAWINGS SHALL BE CONSIDERED PRELIMINARY AND SHALL NOT BE USED AS A CONSTRUCTION DOCUMENT.

THESE DRAWINGS ILLUSTRATES THE WORK TO BE DONE. THE ENGINEER IS NOT RESPONSIBLE FOR THE MEANS, METHODS, TECHNIQUES, SEQUENCES, AND PROCEDURES USED TO DO THE WORK, OR THE SAFETY ASPECTS OF CONSTRUCTION, AND NOTHING ON THESE DRAWINGS EXPRESSED OR IMPLIED CHANGES THIS CONDITION. CONTRACTOR SHALL DETERMINE ALL CONDITIONS AT THE SITE AND SHALL BE RESPONSIBLE FOR KNOWING HOW THEY AFFECT THE WORK. SUBMITTAL OF A BID TO PERFORM THIS WORK IS ACKNOWLEDGEMENT OF THE RESPONSIBILITIES, AND THAT THEY HAVE BEEN FULLY CONSIDERED IN PLANNING OF THE WORK, AND THE BID PRICE. NO CLAIMS FOR EXTRA CHARGES DUE TO THESE CONDITIONS WILL BE FORTHCOMING.

UNAUTHORIZED CHANGES:

IN THE EVENT THE CLIENT, THE CLIENT'S CONTRACTORS OR SUBCONTRACTORS, OR ANYONE FOR WHOM THE CLIENT IS LEGALLY LIABLE MAKES OR PERMITS TO BE MADE ANY CHANGES TO ANY REPORTS, PLANS, SPECIFICATIONS OR OTHER CONSTRUCTION DOCUMENTS PREPARED BY LRL ASSOCIATES LTD. (LRL) WITHOUT OBTAINING LRL'S PRIOR WRITTEN CONSENT, THE CLIENT SHALL ASSUME FULL RESPONSIBILITY FOR THE RESULTS OF SUCH CHANGES. THEREFORE THE CLIENT AGREES TO WAIVE ANY CLAIM AGAINST LRL AND TO RELEASE LRL FROM ANY LIABILITY ARISING DIRECTLY OR INDIRECTLY FROM SUCH UNAUTHORIZED CHANGES.

IN ADDITION, THE CLIENT AGREES, TO THE FULLEST EXTENT PERMITTED BY LAW, TO INDEMNIFY AND HOLD HARMLESS LRL FROM ANY DAMAGES, LIABILITIES OR COST, INCLUDING REASONABLE ATTORNEY'S FEES AND COST OF DEFENSE, ARISING FROM SUCH CHANGES.

IN ADDITION, THE CLIENT AGREES TO INCLUDE IN ANY CONTRACTS FOR CONSTRUCTION APPROPRIATE LANGUAGE THAT PROHIBITS THE CONTRACTOR OR ANY SUBCONTRACTORS OF ANY TIER FROM MAKING ANY CHANGES OR MODIFICATIONS TO LRL'S CONSTRUCTION DOCUMENTS WITHOUT THE PRIOR WRITTEN APPROVAL OF LRL AND THAT FURTHER REQUIRES THE CONTRACTOR TO INDEMNIFY BOTH LRL AND THE CLIENT FROM ANY LIABILITY OR COST ARISING FROM SUCH CHANGES MADE WITHOUT SUCH PROPER AUTHORIZATION.

GENERAL NOTES:

EXISTING SERVICES AND UTILITIES SHOWN ON THESE DRAWINGS ARE TAKEN FROM THE BEST AVAILABLE RECORDS, BUT MAY NOT BE COMPLETE OR TO DATE. CONTRACTOR SHALL VERIFY IN FIELD FOR LOCATION AND ELEVATION OF PIPES AND CHECK WITH THE UTILITY COMPANIES BEFORE DIGGING OR PERFORMING WORK.

CONTRACTOR IS ADVISED TO COLLECT INFORMATION ON SOIL CONDITIONS BEFORE START OF CONSTRUCTION.

THE ENGINEER WAIVES ANY AND ALL RESPONSIBILITY AND LIABILITY FOR PROBLEMS WHICH ARISE FROM FAILURE TO FOLLOW THESE PLANS, SPECIFICATIONS AND THE DESIGN INTENT THEY CONVEY, OR FOR PROBLEMS WHICH ARISE FROM OTHERS' FAILURE TO OBTAIN AND/OR FOLLOW THE ENGINEER'S GUIDANCE WITH RESPECT TO ANY ERRORS, OMISSIONS, INCONSISTENCIES AMBIGUITIES OR CONFLICTS WHICH ARE ALLEGED.

CONTRACTOR TO VERIFY ALL DIMENSIONS AND NOTIFY THE ENGINEER OF ANY DISCREPANCIES BEFORE WORK COMMENCES. DO NOT SCALE DRAWINGS.

5m 2 0 5m
SCALE: 1:200

NOT FOR CONSTRUCTION TENDER OR PERMIT

No.	REVISIONS	BY	DATE
01	ISSUED FOR APPROVAL	A.S.	17 JUL 2020

LICENSED PROFESSIONAL ENGINEER M. BASNET 100501996 2020-07-17 PROVINCE OF ONTARIO

NOT AUTHENTIC UNLESS SIGNED AND DATED

LRL
ENGINEERING | INGÉNIERIE
5430 Canotek Road I Ottawa, ON, K1J 9G2
www.lrl.ca I (613) 842-3434

CLIENT
LANDRIC HOMES INC.

DESIGNED BY:	DRAWN BY:	APPROVED BY:
A.S.	A.S.	M.B.

PROJECT
BLOCK 9
APARTMENT BUILDINGS
ERIC CZAPNIK WAY, ORLEANS

DRAWING TITLE
SERVICING PLAN

PROJECT NO.
200041

DATE
APRIL 2020

C401

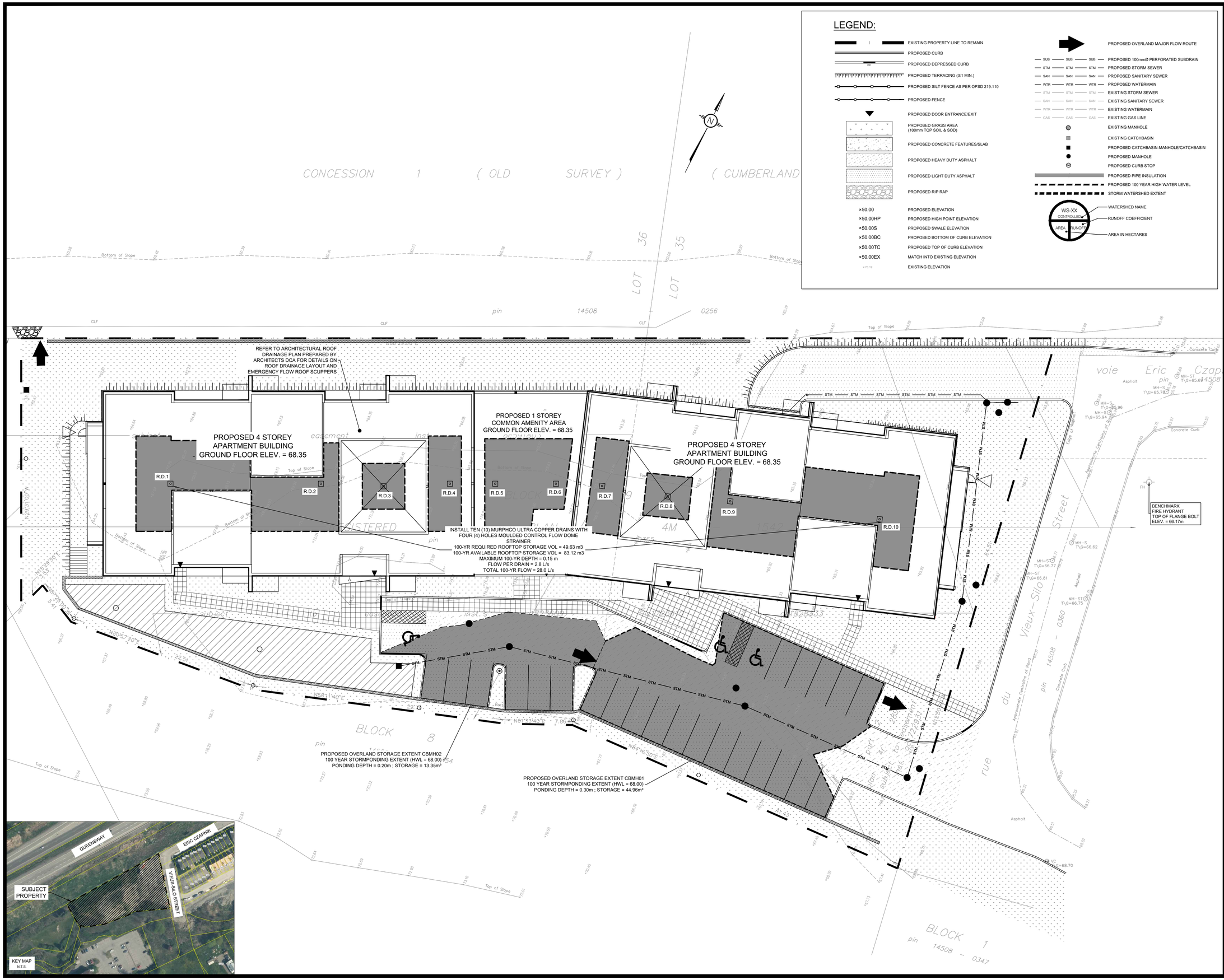

LEGEND:

- EXISTING PROPERTY LINE TO REMAIN
- PROPOSED CURB
- PROPOSED DEPRESSED CURB
- PROPOSED TERRACING (3:1 MIN.)
- PROPOSED SILT FENCE AS PER OPSD 219.110
- PROPOSED FENCE
- PROPOSED DOOR ENTRANCE/EXIT
- PROPOSED GRASS AREA (100mm TOP SOIL & SOD)
- PROPOSED CONCRETE FEATURES/SLAB
- PROPOSED HEAVY DUTY ASPHALT
- PROPOSED LIGHT DUTY ASPHALT
- PROPOSED RIP RAP
- ×50.00 PROPOSED ELEVATION
- ×50.00HP PROPOSED HIGH POINT ELEVATION
- ×50.00S PROPOSED SWALE ELEVATION
- ×50.00BC PROPOSED BOTTOM OF CURB ELEVATION
- ×50.00TC PROPOSED TOP OF CURB ELEVATION
- ×50.00EX MATCH INTO EXISTING ELEVATION
- ×70.19 EXISTING ELEVATION
- PROPOSED OVERLAND MAJOR FLOW ROUTE
- SUB — PROPOSED 100mmØ PERFORATED SUBDRAIN
- STM — PROPOSED STORM SEWER
- SAN — PROPOSED SANITARY SEWER
- WTR — PROPOSED WATERMAIN
- STM — EXISTING STORM SEWER
- SAN — EXISTING SANITARY SEWER
- WTR — EXISTING WATERMAIN
- GAS — EXISTING GAS LINE
- EXISTING MANHOLE
- EXISTING CATCHBASIN
- PROPOSED CATCHBASIN-MANHOLE/CATCHBASIN
- PROPOSED MANHOLE
- PROPOSED CURB STOP
- PROPOSED PIPE INSULATION
- PROPOSED 100 YEAR HIGH WATER LEVEL
- STORM WATERSHED EXTENT
- WS-XX — WATERSHED NAME
- CONTROLLED — RUNOFF COEFFICIENT
- AREA — AREA IN HECTARES

USE AND INTERPRETATION OF DRAWINGS

GENERAL CONDITIONS OF THE CONTRACT FOR CONSTRUCTION ARE PART OF THE CONTRACT DOCUMENTS AND DESCRIBE USE AND INTENT OF THE DRAWING. THE CONTRACT DOCUMENTS INCLUDE NOT ONLY THE DRAWINGS, BUT ALSO THE OWNER-CONTRACTOR AGREEMENTS, CONDITIONS OF THE CONTRACT, THE SPECIFICATIONS, ADDENDA, AND MODIFICATIONS ISSUED AFTER EXECUTION OF THE CONTRACT. THESE CONTRACT DOCUMENTS ARE COMPLEMENTARY, AND WHAT IS REQUIRED BY ANY ONE SHALL BE BINDING AS IF REQUIRED BY ALL. WORK NOT COMPLETELY DELINEATED HEREON SHALL BE CONSTRUCTED OF THE SAME MATERIALS AND DETAILED SIMILARLY AS WORK SHOWN MORE COMPLETELY ELSEWHERE IN THE CONTRACT DOCUMENTS.

BY USE OF THE DRAWINGS FOR CONSTRUCTION OF THE PROJECT, THE OWNER CONFIRMS THAT HE HAS REVIEWED AND APPROVED THE DRAWINGS. THE CONTRACTOR CONFIRMS THAT HE HAS VISITED THE SITE, FAMILIARIZED HIMSELF WITH THE LOCAL CONDITIONS, VERIFIED FIELD DIMENSIONS AND CORRELATED HIS OBSERVATIONS WITH THE REQUIREMENTS OF THE CONTRACT DOCUMENTS.

AS INSTRUMENTS OF SERVICE, ALL DRAWINGS, SPECIFICATIONS, CADD FILES OR OTHER ELECTRONIC MEDIA AND COPIED THERE OF FURNISHED BY THE ENGINEER ARE HIS PROPERTY. THEY ARE TO BE USED ONLY FOR THIS PROJECT AND ARE NOT TO BE USED ON ANY OTHER PROJECT, INCLUDING REPEATS OF THE PROJECT. CHANGES TO THE DRAWINGS MAY ONLY BE MADE BY THE ENGINEER.

UNLESS THE REVISION TITLE IS "ISSUED FOR CONSTRUCTION", THESE DRAWINGS SHALL BE CONSIDERED PRELIMINARY AND SHALL NOT BE USED AS A CONSTRUCTION DOCUMENT.

THESE DRAWINGS ILLUSTRATES THE WORK TO BE DONE. THE ENGINEER IS NOT RESPONSIBLE FOR THE MEANS, METHODS, TECHNIQUES, SEQUENCES, AND PROCEDURES USED TO DO THE WORK, OR THE SAFETY ASPECTS OF CONSTRUCTION, AND NOTHING ON THESE DRAWINGS EXPRESSED OR IMPLIED CHANGES THIS CONDITION. CONTRACTOR SHALL DETERMINE ALL CONDITIONS AT THE SITE AND SHALL BE RESPONSIBLE FOR KNOWING HOW THEY AFFECT THE WORK. SUBMITTAL OF A BID TO PERFORM THIS WORK IS ACKNOWLEDGEMENT OF THE RESPONSIBILITIES, AND THAT THEY HAVE BEEN FULLY CONSIDERED IN PLANNING OF THE WORK, AND THE BID PRICE. NO CLAIMS FOR EXTRA CHARGES DUE TO THESE CONDITIONS WILL BE FORTHCOMING.

UNAUTHORIZED CHANGES:

IN THE EVENT THE CLIENT, THE CLIENT'S CONTRACTORS OR SUBCONTRACTORS, OR ANYONE FOR WHOM THE CLIENT IS LEGALLY LIABLE MAKES OR PERMITS TO BE MADE ANY CHANGES TO ANY REPORTS, PLANS, SPECIFICATIONS OR OTHER CONSTRUCTION DOCUMENTS PREPARED BY LRL ASSOCIATES LTD. (LRL) WITHOUT OBTAINING LRL'S PRIOR WRITTEN CONSENT, THE CLIENT SHALL ASSUME FULL RESPONSIBILITY FOR THE RESULTS OF SUCH CHANGES. THEREFORE THE CLIENT AGREES TO WAIVE ANY CLAIM AGAINST LRL AND TO RELEASE LRL FROM ANY LIABILITY ARISING DIRECTLY OR INDIRECTLY FROM SUCH UNAUTHORIZED CHANGES.

IN ADDITION, THE CLIENT AGREES, TO THE FULLEST EXTENT PERMITTED BY LAW, TO INDEMNIFY AND HOLD HARMLESS LRL FROM ANY DAMAGES, LIABILITIES OR COST, INCLUDING REASONABLE ATTORNEY'S FEES AND COST OF DEFENSE, ARISING FROM SUCH CHANGES.

IN ADDITION, THE CLIENT AGREES TO INCLUDE IN ANY CONTRACTS FOR CONSTRUCTION APPROPRIATE LANGUAGE THAT PROHIBITS THE CONTRACTOR OR ANY SUBCONTRACTORS OF ANY TIER FROM MAKING ANY CHANGES OR MODIFICATIONS TO LRL'S CONSTRUCTION DOCUMENTS WITHOUT THE PRIOR WRITTEN APPROVAL OF LRL AND THAT FURTHER REQUIRES THE CONTRACTOR TO INDEMNIFY BOTH LRL AND THE CLIENT FROM ANY LIABILITY OR COST ARISING FROM SUCH CHANGES MADE WITHOUT SUCH PROPER AUTHORIZATION.

GENERAL NOTES:

EXISTING SERVICES AND UTILITIES SHOWN ON THESE DRAWINGS ARE TAKEN FROM THE BEST AVAILABLE RECORDS, BUT MAY NOT BE COMPLETE OR TO DATE. CONTRACTOR SHALL VERIFY IN FIELD FOR LOCATION AND ELEVATION OF PIPES AND CHECK WITH THE UTILITY COMPANIES BEFORE DIGGING OR PERFORMING WORK.

CONTRACTOR IS ADVISED TO COLLECT INFORMATION ON SOIL CONDITIONS BEFORE START OF CONSTRUCTION.

THE ENGINEER WAIVES ANY AND ALL RESPONSIBILITY AND LIABILITY FOR PROBLEMS WHICH ARISE FROM FAILURE TO FOLLOW THESE PLANS, SPECIFICATIONS AND THE DESIGN INTENT THEY CONVEY, OR FOR PROBLEMS WHICH ARISE FROM OTHERS' FAILURE TO OBTAIN AND/OR FOLLOW THE ENGINEER'S GUIDANCE WITH RESPECT TO ANY ERRORS, OMISSIONS, INCONSISTENCIES AMBIGUITIES OR CONFLICTS WHICH ARE ALLEGED.

CONTRACTOR TO VERIFY ALL DIMENSIONS AND NOTIFY THE ENGINEER OF ANY DISCREPANCIES BEFORE WORK COMMENCES. DO NOT SCALE DRAWINGS.

5m 2 0 5m

SCALE: 1:200

NOT FOR CONSTRUCTION TENDER OR PERMIT

No.	REVISIONS	BY	DATE
01	ISSUED FOR APPROVAL	A.S.	17 JUL 2020

LICENSED PROFESSIONAL ENGINEER
M. BASNET
100501996
2020-07-17
PROVINCE OF ONTARIO

NOT AUTHENTIC UNLESS SIGNED AND DATED

LRL
ENGINEERING | INGÉNIERIE
5430 Canotek Road I Ottawa, ON, K1J 9G2
www.lrl.ca I (613) 842-3434

CLIENT
LANDRIC HOMES INC.

DESIGNED BY:	DRAWN BY:	APPROVED BY:
A.S.	A.S.	M.B.

PROJECT
BLOCK 9
APARTMENT BUILDINGS
ERIC CZAPNIK WAY, ORLEANS

DRAWING TITLE
STORMWATER MANAGEMENT PLAN

PROJECT NO.
200041

DATE
APRIL 2020

C601

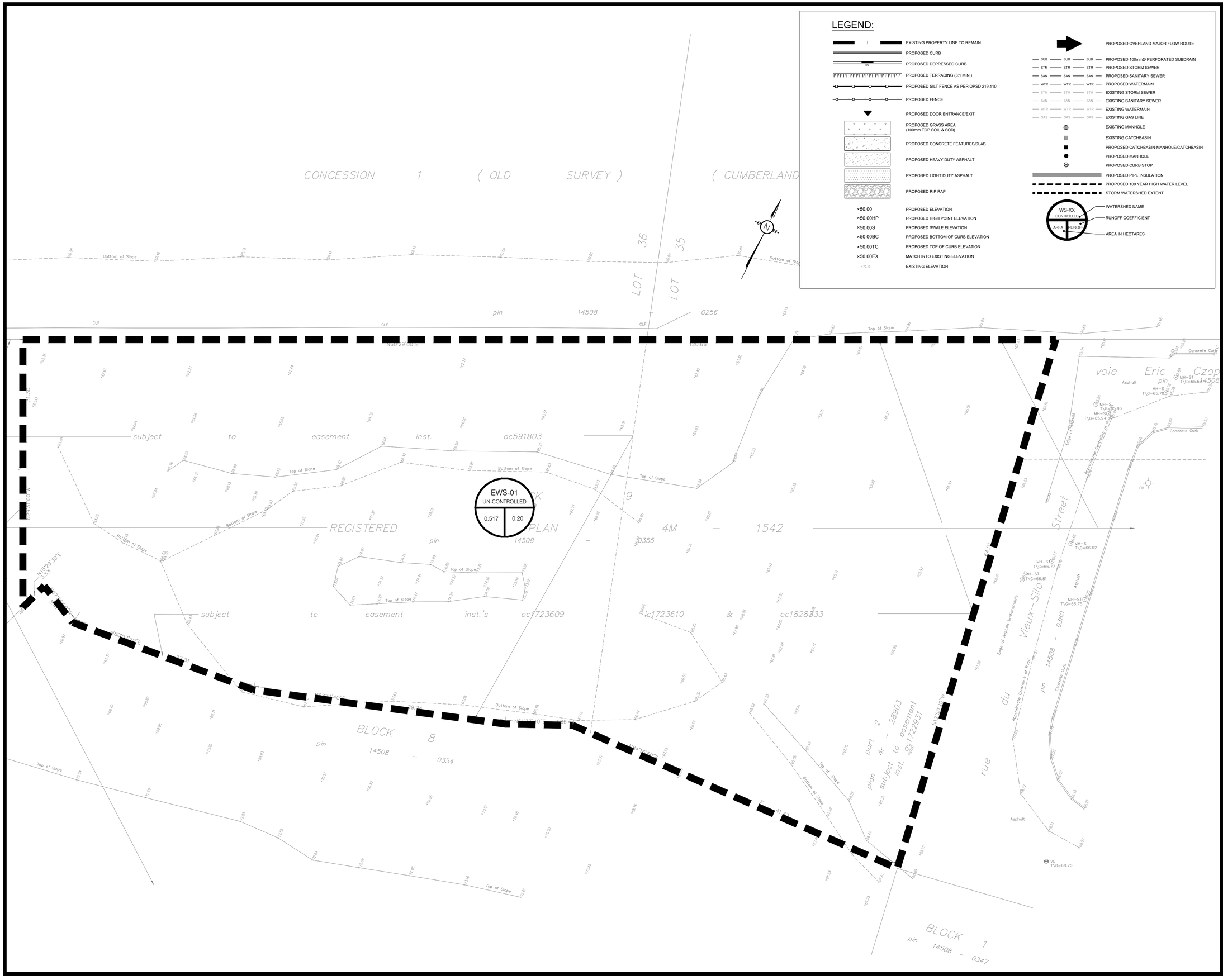

LEGEND:

- EXISTING PROPERTY LINE TO REMAIN
- PROPOSED CURB
- PROPOSED DEPRESSED CURB
- PROPOSED TERRACING (3:1 MIN.)
- PROPOSED SILT FENCE AS PER OPSD 219.110
- PROPOSED FENCE
- PROPOSED DOOR ENTRANCE/EXIT
- PROPOSED GRASS AREA (100mm TOP SOIL & SOD)
- PROPOSED CONCRETE FEATURES/SLAB
- PROPOSED HEAVY DUTY ASPHALT
- PROPOSED LIGHT DUTY ASPHALT
- PROPOSED RIP RAP
- ×50.00 PROPOSED ELEVATION
- ×50.00HP PROPOSED HIGH POINT ELEVATION
- ×50.00S PROPOSED SWALE ELEVATION
- ×50.00BC PROPOSED BOTTOM OF CURB ELEVATION
- ×50.00TC PROPOSED TOP OF CURB ELEVATION
- ×50.00EX MATCH INTO EXISTING ELEVATION
- ×70.19 EXISTING ELEVATION
- PROPOSED OVERLAND MAJOR FLOW ROUTE
- SUB — PROPOSED 100mmØ PERFORATED SUBDRAIN
- STM — PROPOSED STORM SEWER
- SAN — PROPOSED SANITARY SEWER
- WTR — PROPOSED WATERMAIN
- STM — EXISTING STORM SEWER
- SAN — EXISTING SANITARY SEWER
- WTR — EXISTING WATERMAIN
- GAS — EXISTING GAS LINE
- EXISTING MANHOLE
- EXISTING CATCHBASIN
- PROPOSED CATCHBASIN-MANHOLE/CATCHBASIN
- PROPOSED MANHOLE
- PROPOSED CURB STOP
- PROPOSED PIPE INSULATION
- PROPOSED 100 YEAR HIGH WATER LEVEL
- STORM WATERSHED EXTENT
- WS-XX — WATERSHED NAME
- CONTROLLED — RUNOFF COEFFICIENT
- AREA — AREA IN HECTARES

USE AND INTERPRETATION OF DRAWINGS

GENERAL CONDITIONS OF THE CONTRACT FOR CONSTRUCTION ARE PART OF THE CONTRACT DOCUMENTS AND DESCRIBE USE AND INTENT OF THE DRAWING. THE CONTRACT DOCUMENTS INCLUDE NOT ONLY THE DRAWINGS, BUT ALSO THE OWNER-CONTRACTOR AGREEMENTS, CONDITIONS OF THE CONTRACT, THE SPECIFICATIONS, ADDENDA, AND MODIFICATIONS ISSUED AFTER EXECUTION OF THE CONTRACT. THESE CONTRACT DOCUMENTS ARE COMPLEMENTARY, AND WHAT IS REQUIRED BY ANY ONE SHALL BE BINDING AS IF REQUIRED BY ALL. WORK NOT COMPLETELY DELINEATED HEREON SHALL BE CONSTRUCTED OF THE SAME MATERIALS AND DETAILED SIMILARLY AS WORK SHOWN MORE COMPLETELY ELSEWHERE IN THE CONTRACT DOCUMENTS.

BY USE OF THE DRAWINGS FOR CONSTRUCTION OF THE PROJECT, THE OWNER CONFIRMS THAT HE HAS REVIEWED AND APPROVED THE DRAWINGS. THE CONTRACTOR CONFIRMS THAT HE HAS VISITED THE SITE, FAMILIARIZED HIMSELF WITH THE LOCAL CONDITIONS, VERIFIED FIELD DIMENSIONS AND CORRELATED HIS OBSERVATIONS WITH THE REQUIREMENTS OF THE CONTRACT DOCUMENTS.

AS INSTRUMENTS OF SERVICE, ALL DRAWINGS, SPECIFICATIONS, CADD FILES OR OTHER ELECTRONIC MEDIA AND COPIED THERE OF FURNISHED BY THE ENGINEER ARE HIS PROPERTY. THEY ARE TO BE USED ONLY FOR THIS PROJECT AND ARE NOT TO BE USED ON ANY OTHER PROJECT, INCLUDING REPEATS OF THE PROJECT. CHANGES TO THE DRAWINGS MAY ONLY BE MADE BY THE ENGINEER.

UNLESS THE REVISION TITLE IS "ISSUED FOR CONSTRUCTION", THESE DRAWINGS SHALL BE CONSIDERED PRELIMINARY AND SHALL NOT BE USED AS A CONSTRUCTION DOCUMENT.

THESE DRAWINGS ILLUSTRATES THE WORK TO BE DONE. THE ENGINEER IS NOT RESPONSIBLE FOR THE MEANS, METHODS, TECHNIQUES, SEQUENCES, AND PROCEDURES USED TO DO THE WORK, OR THE SAFETY ASPECTS OF CONSTRUCTION, AND NOTHING ON THESE DRAWINGS EXPRESSED OR IMPLIED CHANGES THIS CONDITION. CONTRACTOR SHALL DETERMINE ALL CONDITIONS AT THE SITE AND SHALL BE RESPONSIBLE FOR KNOWING HOW THEY AFFECT THE WORK. SUBMITTAL OF A BID TO PERFORM THIS WORK IS ACKNOWLEDGEMENT OF THE RESPONSIBILITIES, AND THAT THEY HAVE BEEN FULLY CONSIDERED IN PLANNING OF THE WORK, AND THE BID PRICE. NO CLAIMS FOR EXTRA CHARGES DUE TO THESE CONDITIONS WILL BE FORTHCOMING.

UNAUTHORIZED CHANGES:

IN THE EVENT THE CLIENT, THE CLIENT'S CONTRACTORS OR SUBCONTRACTORS, OR ANYONE FOR WHOM THE CLIENT IS LEGALLY LIABLE MAKES OR PERMITS TO BE MADE ANY CHANGES TO ANY REPORTS, PLANS, SPECIFICATIONS OR OTHER CONSTRUCTION DOCUMENTS PREPARED BY LRL ASSOCIATES LTD. (LRL) WITHOUT OBTAINING LRL'S PRIOR WRITTEN CONSENT, THE CLIENT SHALL ASSUME FULL RESPONSIBILITY FOR THE RESULTS OF SUCH CHANGES. THEREFORE THE CLIENT AGREES TO WAIVE ANY CLAIM AGAINST LRL AND TO RELEASE LRL FROM ANY LIABILITY ARISING DIRECTLY OR INDIRECTLY FROM SUCH UNAUTHORIZED CHANGES.

IN ADDITION, THE CLIENT AGREES, TO THE FULLEST EXTENT PERMITTED BY LAW, TO INDEMNIFY AND HOLD HARMLESS LRL FROM ANY DAMAGES, LIABILITIES OR COST, INCLUDING REASONABLE ATTORNEY'S FEES AND COST OF DEFENSE, ARISING FROM SUCH CHANGES.

IN ADDITION, THE CLIENT AGREES TO INCLUDE IN ANY CONTRACTS FOR CONSTRUCTION APPROPRIATE LANGUAGE THAT PROHIBITS THE CONTRACTOR OR ANY SUBCONTRACTORS OF ANY TIER FROM MAKING ANY CHANGES OR MODIFICATIONS TO LRL'S CONSTRUCTION DOCUMENTS WITHOUT THE PRIOR WRITTEN APPROVAL OF LRL AND THAT FURTHER REQUIRES THE CONTRACTOR TO INDEMNIFY BOTH LRL AND THE CLIENT FROM ANY LIABILITY OR COST ARISING FROM SUCH CHANGES MADE WITHOUT SUCH PROPER AUTHORIZATION.

GENERAL NOTES:

EXISTING SERVICES AND UTILITIES SHOWN ON THESE DRAWINGS ARE TAKEN FROM THE BEST AVAILABLE RECORDS, BUT MAY NOT BE COMPLETE OR TO DATE. CONTRACTOR SHALL VERIFY IN FIELD FOR LOCATION AND ELEVATION OF PIPES AND CHECK WITH THE UTILITY COMPANIES BEFORE DIGGING OR PERFORMING WORK.

CONTRACTOR IS ADVISED TO COLLECT INFORMATION ON SOIL CONDITIONS BEFORE START OF CONSTRUCTION.

THE ENGINEER WAIVES ANY AND ALL RESPONSIBILITY AND LIABILITY FOR PROBLEMS WHICH ARISE FROM FAILURE TO FOLLOW THESE PLANS, SPECIFICATIONS AND THE DESIGN INTENT THEY CONVEY, OR FOR PROBLEMS WHICH ARISE FROM OTHERS' FAILURE TO OBTAIN AND/OR FOLLOW THE ENGINEER'S GUIDANCE WITH RESPECT TO ANY ERRORS, OMISSIONS, INCONSISTENCIES AMBIGUITIES OR CONFLICTS WHICH ARE ALLEGED.

CONTRACTOR TO VERIFY ALL DIMENSIONS AND NOTIFY THE ENGINEER OF ANY DISCREPANCIES BEFORE WORK COMMENCES. DO NOT SCALE DRAWINGS.

5m 2 0 5m

SCALE: 1:200

NOT FOR CONSTRUCTION TENDER OR PERMIT

No.	REVISIONS	BY	DATE
01	ISSUED FOR APPROVAL	A.S.	17 JUL 2020

LICENSED PROFESSIONAL ENGINEER
M. BASNET
100501996
2020-07-17
PROVINCE OF ONTARIO

NOT AUTHENTIC UNLESS SIGNED AND DATED

LRL
ENGINEERING | INGÉNIERIE
5430 Canotek Road I Ottawa, ON, K1J 9G2
www.lrl.ca I (613) 842-3434

CLIENT
LANDRIC HOMES INC.

DESIGNED BY:	DRAWN BY:	APPROVED BY:
A.S.	A.S.	M.B.

PROJECT
BLOCK 9
APARTMENT BUILDINGS
ERIC CZAPNIK WAY, ORLEANS

DRAWING TITLE
PRE-DEVELOPMENT
WATERSHED PLAN

PROJECT NO.
200041

DATE
APRIL 2020

C701

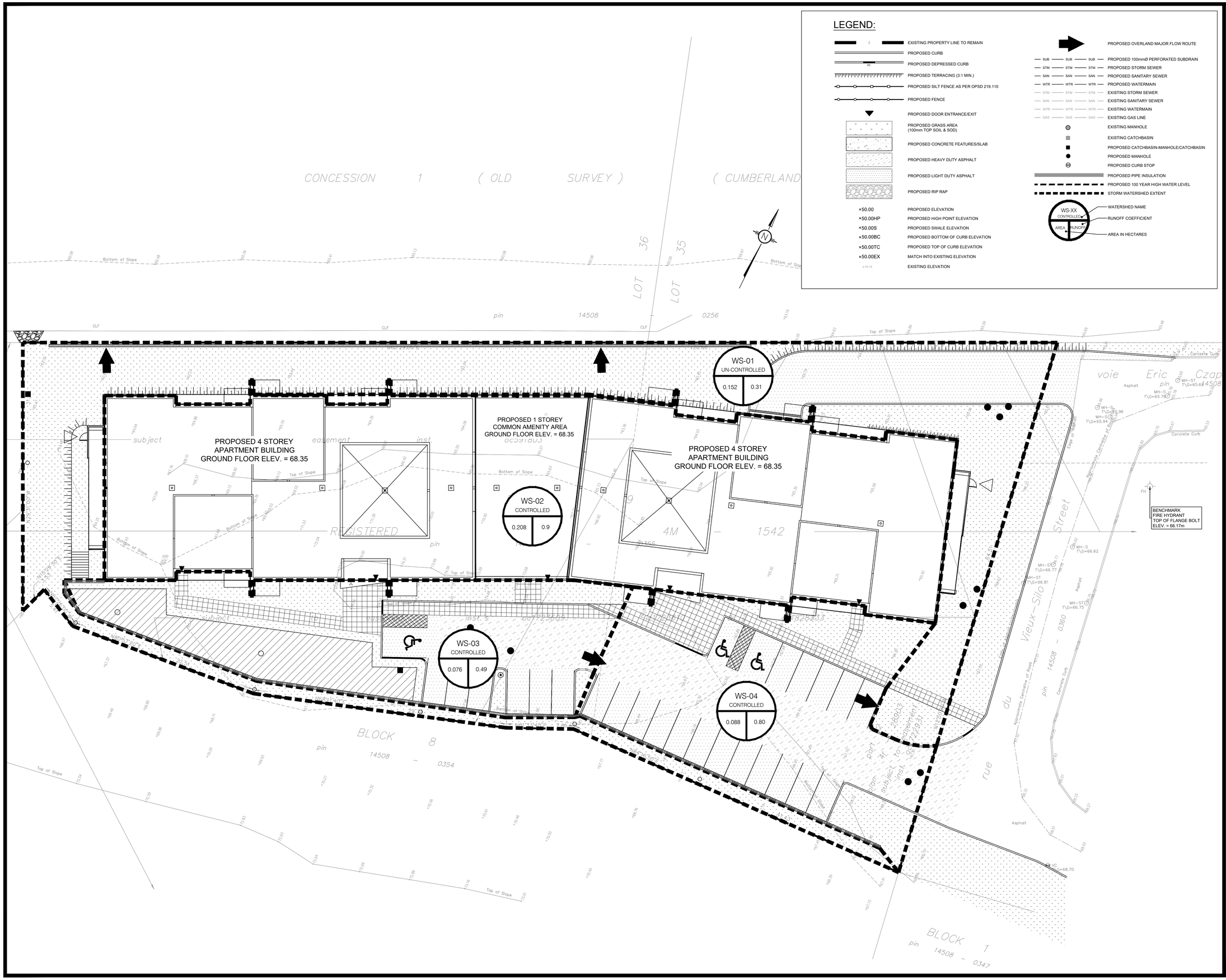

USE AND INTERPRETATION OF DRAWINGS

GENERAL CONDITIONS OF THE CONTRACT FOR CONSTRUCTION ARE PART OF THE CONTRACT DOCUMENTS AND DESCRIBE USE AND INTENT OF THE DRAWING. THE CONTRACT DOCUMENTS INCLUDE NOT ONLY THE DRAWINGS, BUT ALSO THE OWNER-CONTRACTOR AGREEMENTS, CONDITIONS OF THE CONTRACT, THE SPECIFICATIONS, ADDENDA, AND MODIFICATIONS ISSUED AFTER EXECUTION OF THE CONTRACT. THESE CONTRACT DOCUMENTS ARE COMPLEMENTARY, AND WHAT IS REQUIRED BY ANY ONE SHALL BE BINDING AS IF REQUIRED BY ALL. WORK NOT COMPLETELY DELINEATED HEREON SHALL BE CONSTRUCTED OF THE SAME MATERIALS AND DETAILED SIMILARLY AS WORK SHOWN MORE COMPLETELY ELSEWHERE IN THE CONTRACT DOCUMENTS.

BY USE OF THE DRAWINGS FOR CONSTRUCTION OF THE PROJECT, THE OWNER CONFIRMS THAT HE HAS REVIEWED AND APPROVED THE DRAWINGS. THE CONTRACTOR CONFIRMS THAT HE HAS VISITED THE SITE, FAMILIARIZED HIMSELF WITH THE LOCAL CONDITIONS, VERIFIED FIELD DIMENSIONS AND CORRELATED HIS OBSERVATIONS WITH THE REQUIREMENTS OF THE CONTRACT DOCUMENTS.

AS INSTRUMENTS OF SERVICE, ALL DRAWINGS, SPECIFICATIONS, CADD FILES OR OTHER ELECTRONIC MEDIA AND COPIED THERE OF FURNISHED BY THE ENGINEER ARE HIS PROPERTY. THEY ARE TO BE USED ONLY FOR THIS PROJECT AND ARE NOT TO BE USED ON ANY OTHER PROJECT, INCLUDING REPEATS OF THE PROJECT. CHANGES TO THE DRAWINGS MAY ONLY BE MADE BY THE ENGINEER.

UNLESS THE REVISION TITLE IS "ISSUED FOR CONSTRUCTION", THESE DRAWINGS SHALL BE CONSIDERED PRELIMINARY AND SHALL NOT BE USED AS A CONSTRUCTION DOCUMENT.

THESE DRAWINGS ILLUSTRATES THE WORK TO BE DONE. THE ENGINEER IS NOT RESPONSIBLE FOR THE MEANS, METHODS, TECHNIQUES, SEQUENCES, AND PROCEDURES USED TO DO THE WORK, OR THE SAFETY ASPECTS OF CONSTRUCTION, AND NOTHING ON THESE DRAWINGS EXPRESSED OR IMPLIED CHANGES THIS CONDITION. CONTRACTOR SHALL DETERMINE ALL CONDITIONS AT THE SITE AND SHALL BE RESPONSIBLE FOR KNOWING HOW THEY AFFECT THE WORK. SUBMITTAL OF A BID TO PERFORM THIS WORK IS ACKNOWLEDGEMENT OF THE RESPONSIBILITIES, AND THAT THEY HAVE BEEN FULLY CONSIDERED IN PLANNING OF THE WORK, AND THE BID PRICE. NO CLAIMS FOR EXTRA CHARGES DUE TO THESE CONDITIONS WILL BE FORTHCOMING.

UNAUTHORIZED CHANGES:

IN THE EVENT THE CLIENT, THE CLIENT'S CONTRACTORS OR SUBCONTRACTORS, OR ANYONE FOR WHOM THE CLIENT IS LEGALLY LIABLE MAKES OR PERMITS TO BE MADE ANY CHANGES TO ANY REPORTS, PLANS, SPECIFICATIONS OR OTHER CONSTRUCTION DOCUMENTS PREPARED BY LRL ASSOCIATES LTD. (LRL) WITHOUT OBTAINING LRL'S PRIOR WRITTEN CONSENT, THE CLIENT SHALL ASSUME FULL RESPONSIBILITY FOR THE RESULTS OF SUCH CHANGES. THEREFORE THE CLIENT AGREES TO WAIVE ANY CLAIM AGAINST LRL AND TO RELEASE LRL FROM ANY LIABILITY ARISING DIRECTLY OR INDIRECTLY FROM SUCH UNAUTHORIZED CHANGES.

IN ADDITION, THE CLIENT AGREES, TO THE FULLEST EXTENT PERMITTED BY LAW, TO INDEMNIFY AND HOLD HARMLESS LRL FROM ANY DAMAGES, LIABILITIES OR COST, INCLUDING REASONABLE ATTORNEY'S FEES AND COST OF DEFENSE, ARISING FROM SUCH CHANGES.

IN ADDITION, THE CLIENT AGREES TO INCLUDE IN ANY CONTRACTS FOR CONSTRUCTION APPROPRIATE LANGUAGE THAT PROHIBITS THE CONTRACTOR OR ANY SUBCONTRACTORS OF ANY TIER FROM MAKING ANY CHANGES OR MODIFICATIONS TO LRL'S CONSTRUCTION DOCUMENTS WITHOUT THE PRIOR WRITTEN APPROVAL OF LRL AND THAT FURTHER REQUIRES THE CONTRACTOR TO INDEMNIFY BOTH LRL AND THE CLIENT FROM ANY LIABILITY OR COST ARISING FROM SUCH CHANGES MADE WITHOUT SUCH PROPER AUTHORIZATION.

GENERAL NOTES:

EXISTING SERVICES AND UTILITIES SHOWN ON THESE DRAWINGS ARE TAKEN FROM THE BEST AVAILABLE RECORDS, BUT MAY NOT BE COMPLETE OR TO DATE. CONTRACTOR SHALL VERIFY IN FIELD FOR LOCATION AND ELEVATION OF PIPES AND CHECK WITH THE UTILITY COMPANIES BEFORE DIGGING OR PERFORMING WORK.

CONTRACTOR IS ADVISED TO COLLECT INFORMATION ON SOIL CONDITIONS BEFORE START OF CONSTRUCTION.

THE ENGINEER WAIVES ANY AND ALL RESPONSIBILITY AND LIABILITY FOR PROBLEMS WHICH ARISE FROM FAILURE TO FOLLOW THESE PLANS, SPECIFICATIONS AND THE DESIGN INTENT THEY CONVEY, OR FOR PROBLEMS WHICH ARISE FROM OTHERS' FAILURE TO OBTAIN AND/OR FOLLOW THE ENGINEER'S GUIDANCE WITH RESPECT TO ANY ERRORS, OMISSIONS, INCONSISTENCIES AMBIGUITIES OR CONFLICTS WHICH ARE ALLEGED.

CONTRACTOR TO VERIFY ALL DIMENSIONS AND NOTIFY THE ENGINEER OF ANY DISCREPANCIES BEFORE WORK COMMENCES. DO NOT SCALE DRAWINGS.

5m 2 0 5m

SCALE: 1:200

NOT FOR CONSTRUCTION TENDER OR PERMIT

No.	REVISIONS	BY	DATE
01	ISSUED FOR APPROVAL	A.S.	17 JUL 2020

LICENSED PROFESSIONAL ENGINEER
M. BASNET
100501996
2020-07-17
PROVINCE OF ONTARIO

NOT AUTHENTIC UNLESS SIGNED AND DATED

LRL
ENGINEERING | INGÉNIERIE
5430 Canotek Road | Ottawa, ON, K1J 9G2
www.lrl.ca | (613) 842-3434

CLIENT
LANDRIC HOMES INC.

DESIGNED BY:	DRAWN BY:	APPROVED BY:
A.S.	A.S.	M.B.

PROJECT
BLOCK 9
APARTMENT BUILDINGS
ERIC CZAPNIK WAY, ORLEANS

DRAWING TITLE
POST-DEVELOPMENT
WATERSHED PLAN

PROJECT NO.
200041

DATE
APRIL 2020

C702

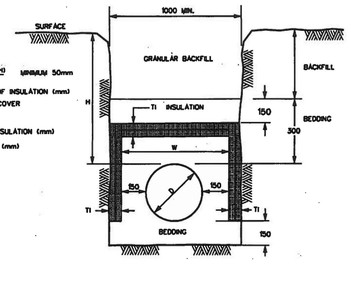

NOTES:
-FOR STORM INSULATION USE AN X VALUE OF 2000 IN THE ABOVE "TI" EQUATION.
-FOR SANITARY INSULATION USE AN X VALUE OF 2500 IN THE ABOVE "TI" EQUATION.
-FOR WATERMAIN INSULATION USE AN X VALUE OF 2400 IN THE ABOVE "TI" EQUATION.
-INCREMENTS OF INSULATION THICKNESS SHALL BE ADJUSTABLE TO 25mm.
-STAGGER JOINTS OF MULTIPLE SHEETS.
-ALL DIMENSIONS ARE IN MILLIMETERS UNLESS SHOWN OTHERWISE.

TYPICAL STORM AND SANITARYSEWER AND WATERMAIN INSULATION DETAIL
(N.T.S.)

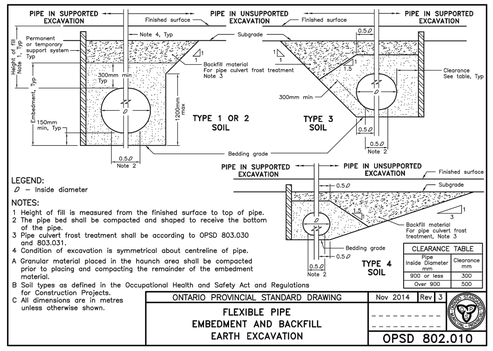

CLEARANCE TABLE	
Pipe Inside Diameter mm	Clearance mm
900 or less	300
Over 900	500

ONTARIO PROVINCIAL STANDARD DRAWING	Nov 2014	Rev 3
FLEXIBLE PIPE EMBEDMENT AND BACKFILL EARTH EXCAVATION		OPSD 802.010

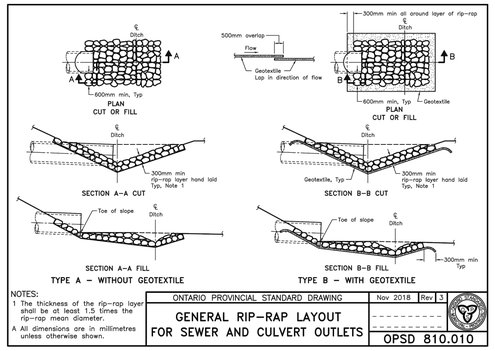

ONTARIO PROVINCIAL STANDARD DRAWING	Nov 2018	Rev 3
GENERAL RIP-RAP LAYOUT FOR SEWER AND CULVERT OUTLETS		OPSD 810.010

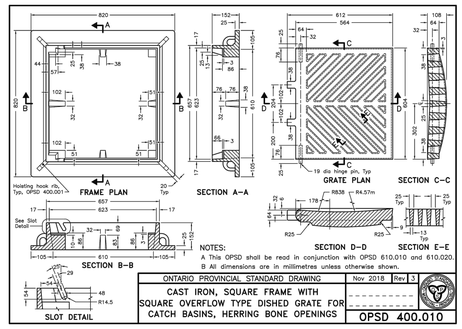

ONTARIO PROVINCIAL STANDARD DRAWING	Nov 2018	Rev 3
CAST IRON, SQUARE FRAME WITH SQUARE OVERFLOW TYPE DISHED GRATE FOR CATCH BASINS, HERRING BONE OPENINGS		OPSD 400.010

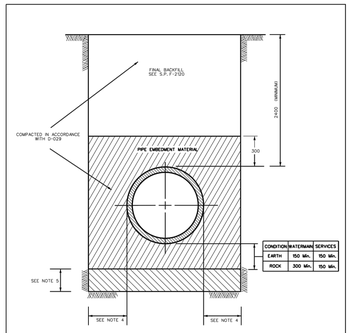

Ottawa	STANDARD TRENCH DETAIL	DATE: MAY 2001 / REV. DATE: MARCH 2016 / DWG. No.: W17

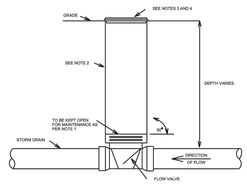

Ottawa	TYPICAL DEPRESSED DRIVEWAY BACKWATER VALVE AND STANDPIPE DETAIL	N.T.S. / DATE: MAY 2001 / REV. DATE: MARCH 2016 / DWG. No.: S18

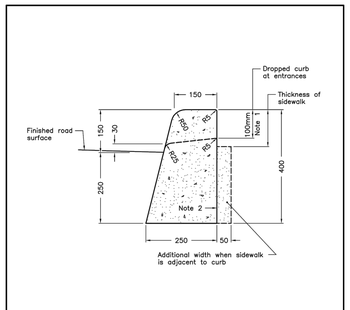

ONTARIO PROVINCIAL STANDARD DRAWING	Nov 2012	Rev 2
CONCRETE BARRIER CURB		OPSD 600.110

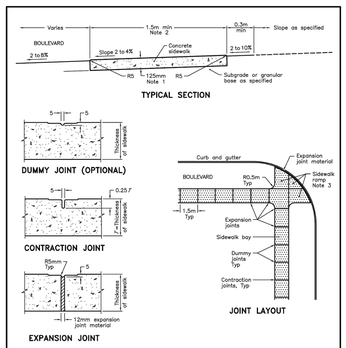

ONTARIO PROVINCIAL STANDARD DRAWING	Nov 2015	Rev 2
CONCRETE SIDEWALK		OPSD 310.010

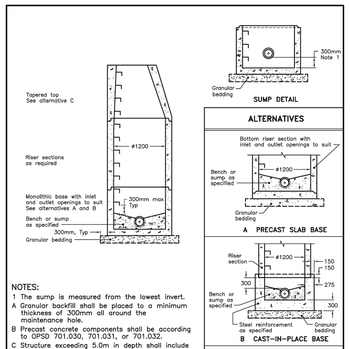

ONTARIO PROVINCIAL STANDARD DRAWING	Nov 2014	Rev 3
PRECAST CONCRETE MAINTENANCE HOLE 1200mm DIAMETER		OPSD 701.010

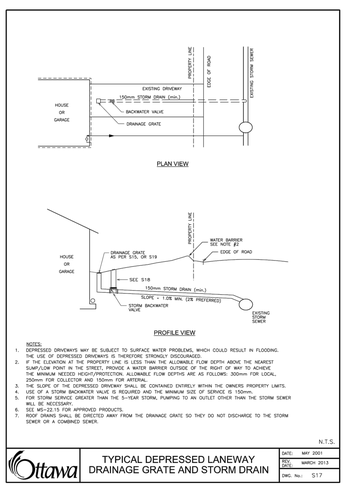

Ottawa	TYPICAL DEPRESSED LANEWAY DRAINAGE GRATE AND STORM DRAIN	N.T.S. / DATE: MAY 2001 / REV. DATE: MARCH 2013 / DWG. No.: S17

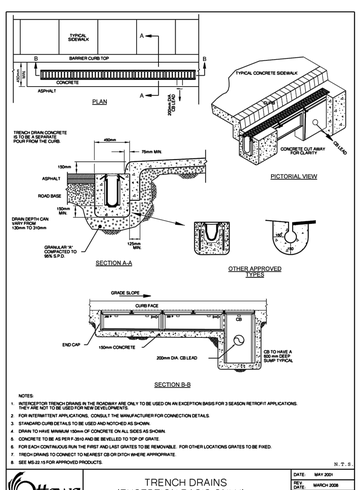

Ottawa	TRENCH DRAINS (EXCEPTION BASIS ONLY)	N.T.S. / DATE: MAY 2001 / REV. DATE: MARCH 2008 / DWG. No.: S15

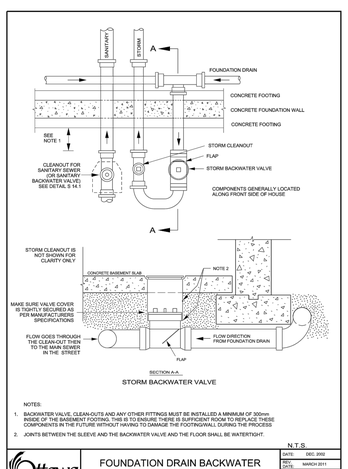

Ottawa	FOUNDATION DRAIN BACKWATER VALVE INSTALLATION	N.T.S. / DATE: DEC 2002 / REV. DATE: MARCH 2011 / DWG. No.: S14

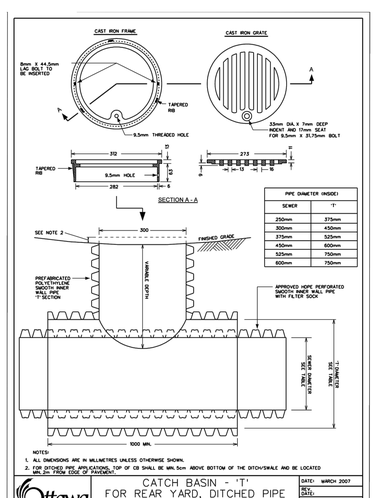

Ottawa	CATCH BASIN - 'T' FOR REAR YARD, DITCHED PIPE AND LANDSCAPING APPLICATIONS	DATE: MARCH 2007 / REV. DATE: / DWG. No.: S30

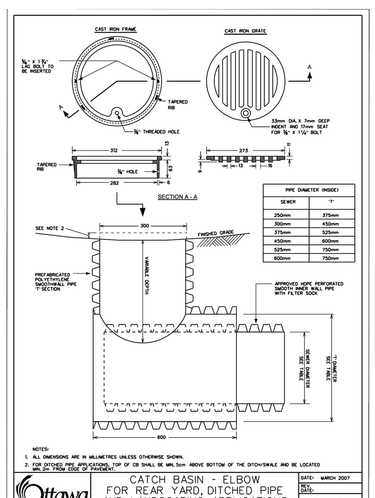

Ottawa	CATCH BASIN - ELBOW FOR REAR YARD, DITCHED PIPE AND LANDSCAPING APPLICATIONS	DATE: MARCH 2007 / REV. DATE: / DWG. No.: S31

USE AND INTERPRETATION OF DRAWINGS

GENERAL CONDITIONS OF THE CONTRACT FOR CONSTRUCTION ARE PART OF THE CONTRACT DOCUMENTS AND DESCRIBE USE AND INTENT OF THE DRAWING. THE CONTRACT DOCUMENTS INCLUDE NOT ONLY THE DRAWINGS, BUT ALSO THE OWNER-CONTRACTOR AGREEMENTS, CONDITIONS OF THE CONTRACT, THE SPECIFICATIONS, ADDENDA, AND MODIFICATIONS ISSUED AFTER EXECUTION OF THE CONTRACT. THESE CONTRACT DOCUMENTS ARE COMPLEMENTARY, AND WHAT IS REQUIRED BY ANY ONE SHALL BE BINDING AS IF REQUIRED BY ALL. WORK NOT COMPLETELY DELINEATED HEREON SHALL BE CONSTRUCTED OF THE SAME MATERIALS AND DETAILED SIMILARLY AS WORK SHOWN MORE COMPLETELY ELSEWHERE IN THE CONTRACT DOCUMENTS.

BY USE OF THE DRAWINGS FOR CONSTRUCTION OF THE PROJECT, THE OWNER CONFIRMS THAT HE HAS REVIEWED AND APPROVED THE DRAWINGS. THE CONTRACTOR CONFIRMS THAT HE HAS VISITED THE SITE, FAMILIARIZED HIMSELF WITH THE LOCAL CONDITIONS, VERIFIED FIELD DIMENSIONS AND CORRELATED HIS OBSERVATIONS WITH THE REQUIREMENTS OF THE CONTRACT DOCUMENTS.

AS INSTRUMENTS OF SERVICE, ALL DRAWINGS, SPECIFICATIONS, CADD FILES OR OTHER ELECTRONIC MEDIA AND COPIED THERE OF FURNISHED BY THE ENGINEER ARE HIS PROPERTY. THEY ARE TO BE USED ONLY FOR THIS PROJECT AND ARE NOT TO BE USED ON ANY OTHER PROJECT, INCLUDING REPEATS OF THE PROJECT. CHANGES TO THE DRAWINGS MAY ONLY BE MADE BY THE ENGINEER.

UNLESS THE REVISION TITLE IS "ISSUED FOR CONSTRUCTION", THESE DRAWINGS SHALL BE CONSIDERED PRELIMINARY AND SHALL NOT BE USED AS A CONSTRUCTION DOCUMENT.

THESE DRAWINGS ILLUSTRATES THE WORK TO BE DONE. THE ENGINEER IS NOT RESPONSIBLE FOR THE MEANS, METHODS, TECHNIQUES, SEQUENCES, AND PROCEDURES USED TO DO THE WORK, OR THE SAFETY ASPECTS OF CONSTRUCTION, AND NOTHING ON THESE DRAWINGS EXPRESSED OR IMPLIED CHANGES THIS CONDITION. CONTRACTOR SHALL DETERMINE ALL CONDITIONS AT THE SITE AND SHALL BE RESPONSIBLE FOR KNOWING HOW THEY AFFECT THE WORK. SUBMITTAL OF A BID TO PERFORM THIS WORK IS ACKNOWLEDGEMENT OF THE RESPONSIBILITIES, AND THAT THEY HAVE BEEN FULLY CONSIDERED IN PLANNING OF THE WORK, AND THE BID PRICE. NO CLAIMS FOR EXTRA CHARGES DUE TO THESE CONDITIONS WILL BE FORTHCOMING.

UNAUTHORIZED CHANGES:

IN THE EVENT THE CLIENT, THE CLIENT'S CONTRACTORS OR SUBCONTRACTORS, OR ANYONE FOR WHOM THE CLIENT IS LEGALLY LIABLE MAKES OR PERMITS TO BE MADE ANY CHANGES TO ANY REPORTS, PLANS, SPECIFICATIONS OR OTHER CONSTRUCTION DOCUMENTS PREPARED BY LRL ASSOCIATES LTD. (LRL) WITHOUT OBTAINING LRL'S PRIOR WRITTEN CONSENT, THE CLIENT SHALL ASSUME FULL RESPONSIBILITY FOR THE RESULTS OF SUCH CHANGES. THEREFORE THE CLIENT AGREES TO WAIVE ANY CLAIM AGAINST LRL AND TO RELEASE LRL FROM ANY LIABILITY ARISING DIRECTLY OR INDIRECTLY FROM SUCH UNAUTHORIZED CHANGES.

IN ADDITION, THE CLIENT AGREES, TO THE FULLEST EXTENT PERMITTED BY LAW, TO INDEMNIFY AND HOLD HARMLESS LRL FROM ANY DAMAGES, LIABILITIES OR COST, INCLUDING REASONABLE ATTORNEY'S FEES AND COST OF DEFENSE, ARISING FROM SUCH CHANGES.

IN ADDITION, THE CLIENT AGREES TO INCLUDE IN ANY CONTRACTS FOR CONSTRUCTION APPROPRIATE LANGUAGE THAT PROHIBITS THE CONTRACTOR OR ANY SUBCONTRACTORS OF ANY TIER FROM MAKING ANY CHANGES OR MODIFICATIONS TO LRL'S CONSTRUCTION DOCUMENTS WITHOUT THE PRIOR WRITTEN APPROVAL OF LRL AND THAT FURTHER REQUIRES THE CONTRACTOR TO INDEMNIFY BOTH LRL AND THE CLIENT FROM ANY LIABILITY OR COST ARISING FROM SUCH CHANGES MADE WITHOUT SUCH PROPER AUTHORIZATION.

GENERAL NOTES:

EXISTING SERVICES AND UTILITIES SHOWN ON THESE DRAWINGS ARE TAKEN FROM THE BEST AVAILABLE RECORDS, BUT MAY NOT BE COMPLETE OR TO DATE. CONTRACTOR SHALL VERIFY IN FIELD FOR LOCATION AND ELEVATION OF PIPES AND CHECK WITH THE UTILITY COMPANIES BEFORE DIGGING OR PERFORMING WORK.

CONTRACTOR IS ADVISED TO COLLECT INFORMATION ON SOIL CONDITIONS BEFORE START OF CONSTRUCTION.

THE ENGINEER WAIVES ANY AND ALL RESPONSIBILITY AND LIABILITY FOR PROBLEMS WHICH ARISE FROM FAILURE TO FOLLOW THESE PLANS, SPECIFICATIONS AND THE DESIGN INTENT THEY CONVEY, OR FOR PROBLEMS WHICH ARISE FROM OTHERS' FAILURE TO OBTAIN AND/OR FOLLOW THE ENGINEER'S GUIDANCE WITH RESPECT TO ANY ERRORS, OMISSIONS, INCONSISTENCIES AMBIGUITIES OR CONFLICTS WHICH ARE ALLEGED.

CONTRACTOR TO VERIFY ALL DIMENSIONS AND NOTIFY THE ENGINEER OF ANY DISCREPANCIES BEFORE WORK COMMENCES. DO NOT SCALE DRAWINGS.

NOT FOR CONSTRUCTION TENDER OR PERMIT

No.	REVISIONS	BY	DATE
01	ISSUED FOR APPROVAL	A.S.	17 JUL 2020

LICENSED PROFESSIONAL ENGINEER M. BASNET 100501996 2020-07-17 PROVINCE OF ONTARIO

NOT AUTHENTIC UNLESS SIGNED AND DATED

LRL
ENGINEERING | INGÉNIERIE
5430 Canotek Road I Ottawa, ON, K1J 9G2
www.lrl.ca I (613) 842-3434

CLIENT
LANDRIC HOMES INC.

DESIGNED BY:	DRAWN BY:	APPROVED BY:
A.S.	A.S.	M.B.

PROJECT
BLOCK 9
APARTMENT BUILDINGS
ERIC CZAPNIK WAY, ORLEANS

DRAWING TITLE
CONSTRUCTION DETAIL PLAN

PROJECT NO.
200041

DATE
APRIL 2020

C901