NOTE
DOWN SPOUTS TO BE LOCATED ON SITE BY INSTALLING CONTRACTOR AND LOCATIONS TO BE CONFIRMED BY HOME OWNER

SOFFIT NOTE
USE NON-VENTED SOFFIT IF WITHIN 1.2m OF PROPERTY LINE.

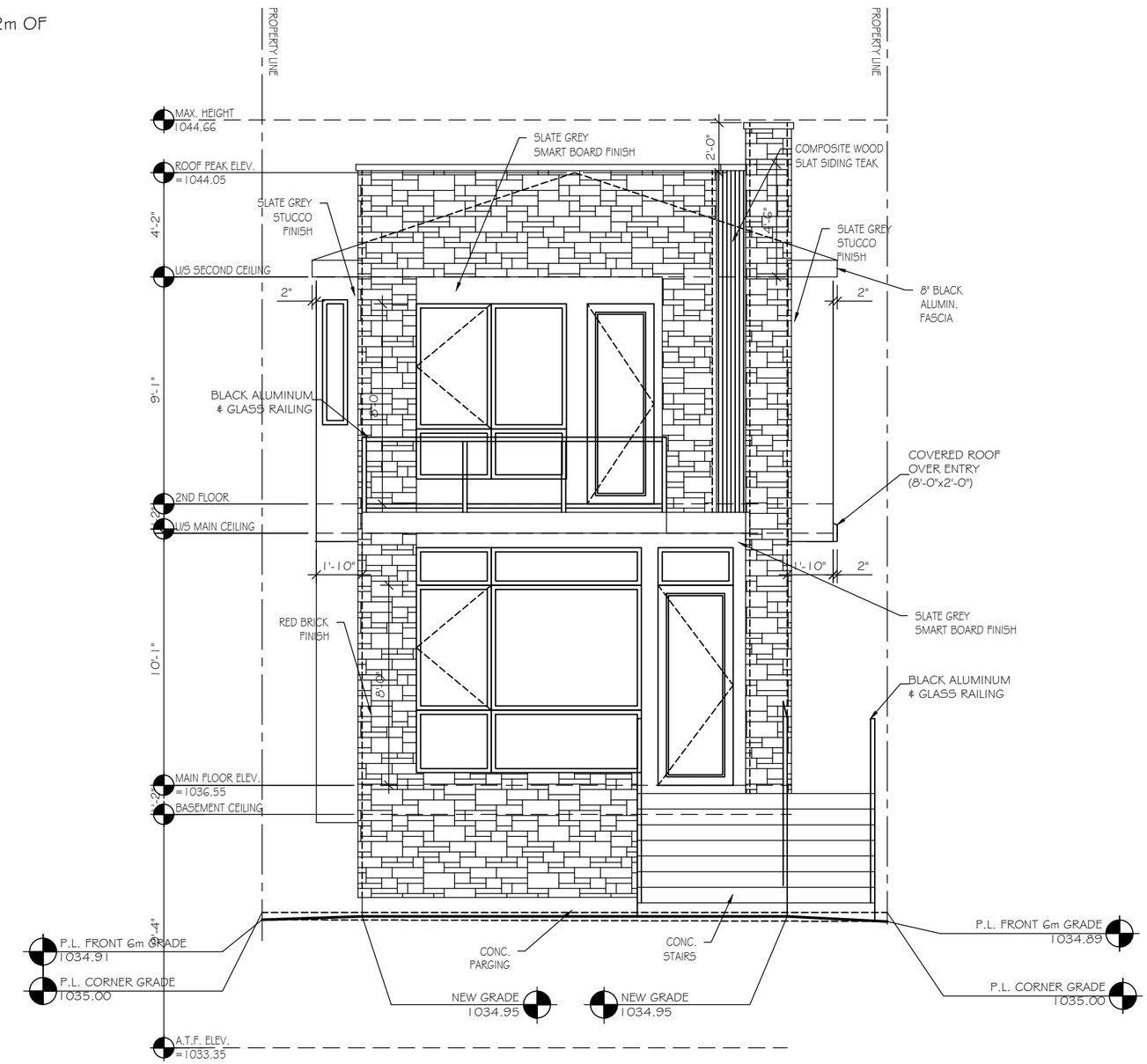

FRONT (NORTH) ELEVATION

SCALE: 3/16"=1'-0"

EXTERIOR COLOURS - TYPICAL ON ALL ELEVATIONS

ROOF	ASPHALT - DUAL BLACK-IKO	BATTENS	SMARTBOARD - SLATE GREY
WALLS	STUCCO #1 - N/A	SIDING	HARDIBOARD - SLATE GREY
	STUCCO #2 - N/A	WINDOWS	ALUMINUM - BLACK
FASCIA	ALUMINUM - BLACK	MANU. STONE	REAL BRICK - RED
SOFFIT	ALUMINUM - BLACK	FRONT DOOR	METAL CLAD - BLACK
RAINWARE	ALUMINUM - BLACK	RAILING	ALUMINUM - BLACK

WINDOW, DOOR & SKYLIGHT REQUIREMENTS

PERFORMANCE CLASS:	R
TERRAIN:	ROUGH
MIN. PERFORMANCE GRADE (PG)[B]:	25
MIN. POSITIVE DESIGN PRESSURE:	1200Pa
MIN. NEGATIVE DESIGN PRESSURE:	1200Pa
MIN. WATER PENETRATION TEST PRESSURE:	260Pa
MIN. CANADIAN AIR INFILTRATION/EXFILTRATION[C]:	A2
MAX. 'U' VALUES W/(M2xK)	
WINDOWS & DOORS:	1.6
(MIN. ENERGY RATING)	25
SKYLIGHTS:	2.7

HIGHEST AVERAGE GRADE FRONT = 1035.00
HIGHEST AVERAGE GRADE REAR = 1034.67
HIGHEST AVERAGE GRADE +1.00 = 1036.00
HIGHEST AVERAGE GRADE +1.00 + 8.66 = 1044.66
MAXIMUM HEIGHT = 1044.66
DIFFERENCE IN SLOPE FRONT TO BACK = 0.33m

SEVEN DESIGN LTD

ENGINEER STAMP

CONTRACTOR TO VERIFY ALL DIMENSIONS PRIOR TO START AND REPORT ERRORS TO DESIGNER FOR CORRECTION.

SPECIFICATION:	CUSTOM
MAIN AREA:	1015 SQ.FT.
SECOND AREA:	1087 SQ.FT.
DEV. BASEMENT:	740 SQ.FT.
TOTAL AREA:	2102 SQ.FT.
DRAWN BY:	MET
DATE:	OCT./26
SCALE:	3/16"=1'-0"
REVISED:	N/A
JOB NO.:	N/A

MODEL: CUSTOM SINGLE DETACHED DWELLING
CLIENT: PRIVATE RESIDENCE
LOT: 24 BLOCK: 9 PLAN: 5236 R
ADDRESS: 2207 8 AVENUE S.E.

WINDOW, DOOR & SKYLIGHT REQUIREMENTS

PERFORMANCE CLASS:	R
TERRAIN:	ROUGH
MIN. PERFORMANCE GRADE (PG)[B]:	25
MIN. POSITIVE DESIGN PRESSURE:	1200Pa
MIN. NEGATIVE DESIGN PRESSURE:	1200Pa
MIN. WATER PENETRATION TEST PRESSURE:	260Pa
MIN. CANADIAN AIR INFILTRATION/EXFILTRATION[C]:	A2
MAX. 'U' VALUES W/(M2xK)	
WINDOWS & DOORS:	1.6
(MIN. ENERGY RATING)	25
SKYLIGHTS:	2.7

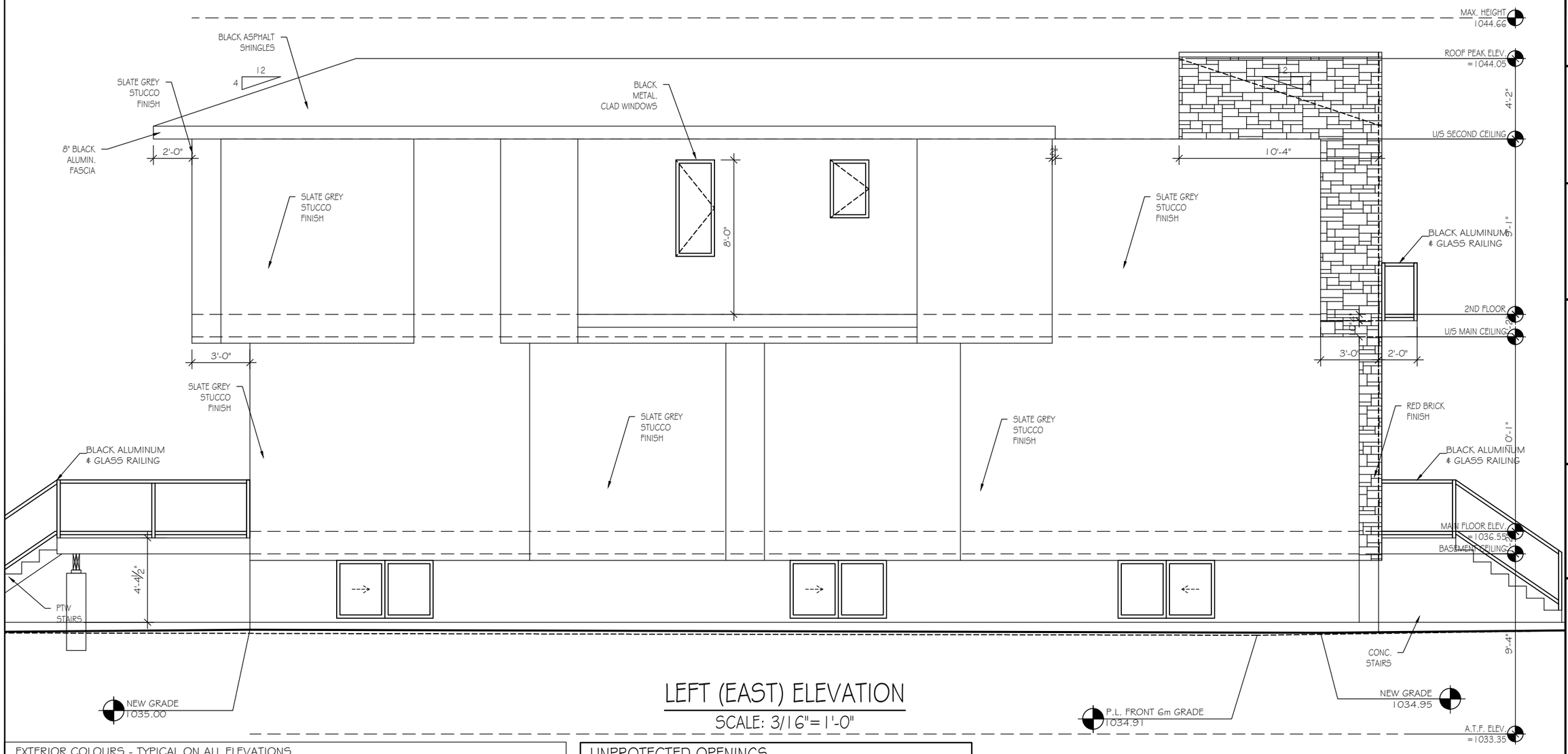

LEFT (EAST) ELEVATION

SCALE: 3/16"=1'-0"

EXTERIOR COLOURS - TYPICAL ON ALL ELEVATIONS

ROOF	ASPHALT - DUAL BLACK-IKO	BATTENS	SMARTBOARD - SLATE GREY
WALLS	STUCCO #1 - N/A	SIDING	HARDIBOARD - SLATE GREY
	STUCCO #2 - N/A	WINDOWS	ALUMINUM - BLACK
FASCIA	ALUMINUM - BLACK	MANU. STONE	REAL BRICK - RED
SOFFIT	ALUMINUM - BLACK	FRONT DOOR	METAL CLAD - BLACK
RAINWARE	ALUMINUM - BLACK	RAILING	ALUMINUM - BLACK

UNPROTECTED OPENINGS

WALL AREA :	1492.09 sq.ft.
GLAZING AREA ALLOWED (7.00%) :	104.45 sq.ft.
CURRENT GLAZING AREA :	61.00 sq.ft.

SEVEN DESIGN LTD

ENGINEER STAMP

CONTRACTOR TO VERIFY ALL DIMENSIONS PRIOR TO START AND REPORT ERRORS TO DESIGNER FOR CORRECTION.

SPECIFICATION:	CUSTOM
MAIN AREA:	1015 SQ.FT.
SECOND AREA:	1087 SQ.FT.
DEV. BASEMENT:	740 SQ.FT.
TOTAL AREA:	2102 SQ.FT.
DRAWN BY:	MET
DATE:	OCT./26
SCALE:	3/16"=1'-0"
REVISED:	N/A
JOB NO.:	N/A

MODEL: CUSTOM SINGLE DETACHED DWELLING
CLIENT: PRIVATE RESIDENCE
LOT: 24 BLOCK: 9 PLAN: 5236 R
ADDRESS: 2207 8 AVENUE S.E.

WINDOW, DOOR & SKYLIGHT REQUIREMENTS	
PERFORMANCE CLASS:	R
TERRAIN:	ROUGH
MIN. PERFORMANCE GRADE (PG)[B]:	25
MIN. POSITIVE DESIGN PRESSURE:	1200Pa
MIN. NEGATIVE DESIGN PRESSURE:	1200Pa
MIN. WATER PENETRATION TEST PRESSURE:	260Pa
MIN. CANADIAN AIR INFILTRATION/EXFILTRATION[C]:	A2
MAX. 'U' VALUES W/(M2xK)	
WINDOWS & DOORS:	1.6
(MIN. ENERGY RATING)	25
SKYLIGHTS:	2.7

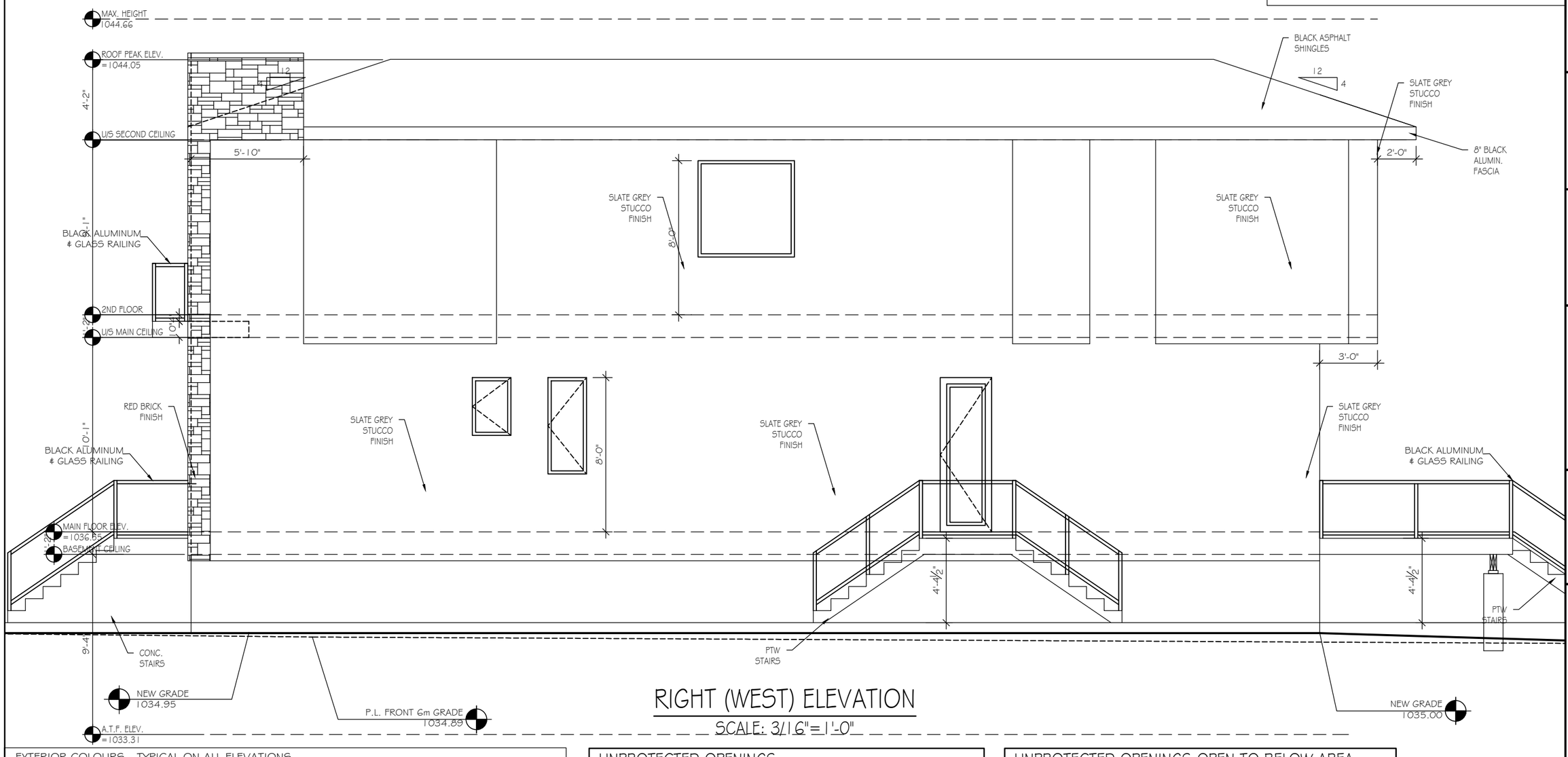

RIGHT (WEST) ELEVATION

SCALE: 3/16"=1'-0"

EXTERIOR COLOURS - TYPICAL ON ALL ELEVATIONS			
ROOF	ASPHALT - DUAL BLACK-IKO	BATTENS	SMARTBOARD - SLATE GREY
WALLS	STUCCO #1 - N/A	SIDING	HARDIBOARD - SLATE GREY
	STUCCO #2 - N/A	WINDOWS	ALUMINUM - BLACK
FASCIA	ALUMINUM - BLACK	MANU. STONE	REAL BRICK - RED
SOFFIT	ALUMINUM - BLACK	FRONT DOOR	METAL CLAD - BLACK
RAINWARE	ALUMINUM - BLACK	RAILING	ALUMINUM - BLACK

UNPROTECTED OPENINGS	
WALL AREA :	1528.38 sq.ft.
GLAZING AREA ALLOWED (7.00%) :	106.99 sq.ft.
CURRENT GLAZING AREA :	55.67 sq.ft.

UNPROTECTED OPENINGS OPEN TO BELOW AREA	
TOTAL GLAZING ALLOWED :	106.99 SQ.FT.
GLAZING AREA ALLOWED (50%) :	53.50 SQ.FT.
CURRENT GLAZING AREA :	35.00 SQ.FT.

SEVEN DESIGN LTD

ENGINEER STAMP

CONTRACTOR TO VERIFY ALL DIMENSIONS PRIOR TO START AND REPORT ERRORS TO DESIGNER FOR CORRECTION.

SPECIFICATION:	CUSTOM
MAIN AREA:	1015 SQ.FT.
SECOND AREA:	1087 SQ.FT.
DEV. BASEMENT:	740 SQ.FT.
TOTAL AREA:	2102 SQ.FT.
DRAWN BY:	MET
DATE:	OCT./26
SCALE:	3/16"=1'-0"
REVISED:	N/A
JOB NO.:	N/A

MODEL: CUSTOM SINGLE DETACHED DWELLING
CLIENT: PRIVATE RESIDENCE
LOT: 24 BLOCK: 9 PLAN: 5236 R
ADDRESS: 2207 8 AVENUE S.E.

3 OF 16

WINDOW, DOOR & SKYLIGHT REQUIREMENTS

PERFORMANCE CLASS:	R
TERRAIN:	ROUGH
MIN. PERFORMANCE GRADE (PG)[B]:	25
MIN. POSITIVE DESIGN PRESSURE:	1200Pa
MIN. NEGATIVE DESIGN PRESSURE:	1200Pa
MIN. WATER PENETRATION TEST PRESSURE:	260Pa
MIN. CANADIAN AIR INFILTRATION/EXFILTRATION[C]:	A2
MAX. 'U' VALUES W/(M2xK)	
WINDOWS & DOORS:	1.6
(MIN. ENERGY RATING)	25
SKYLIGHTS:	2.7

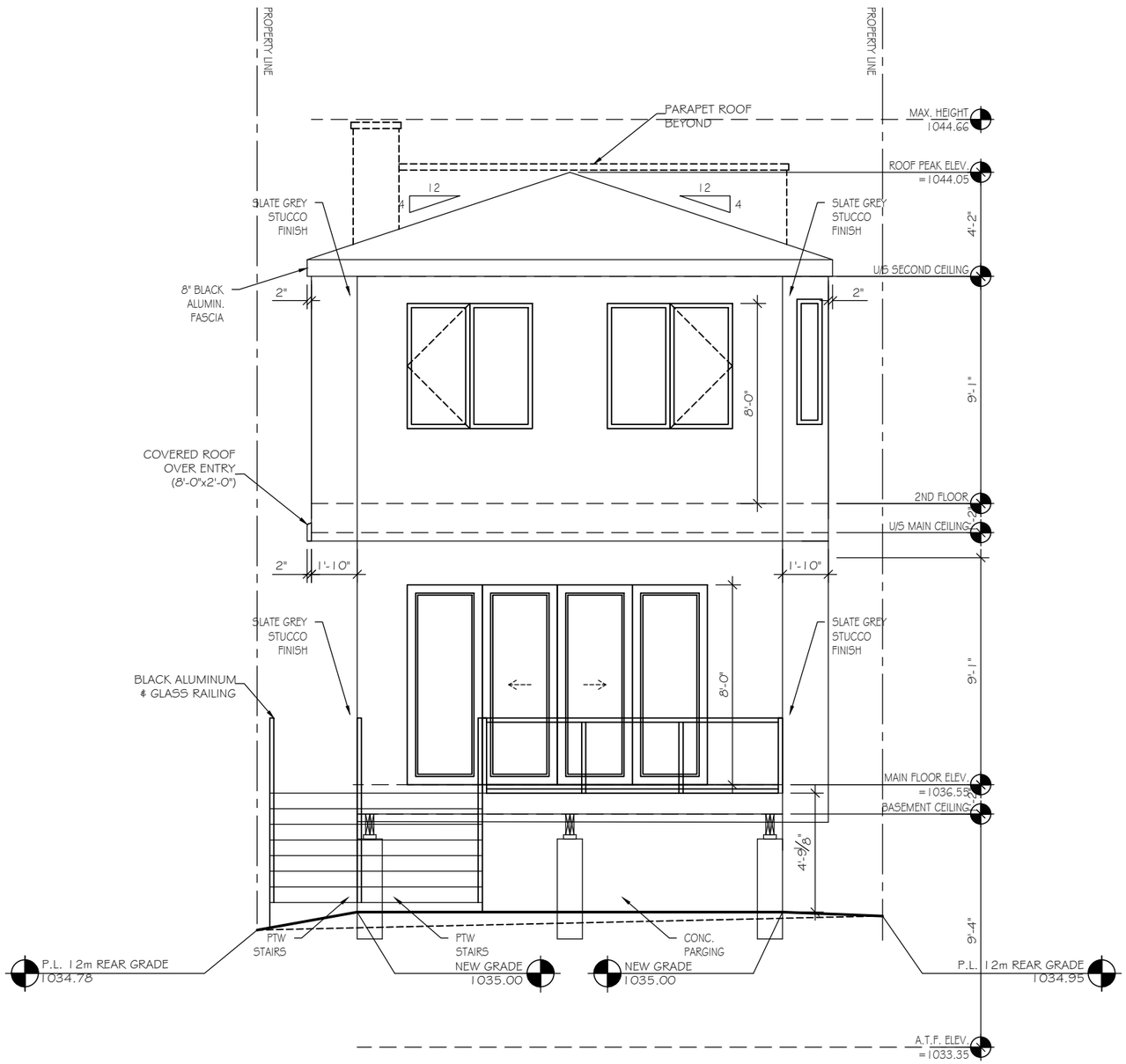

REAR (SOUTH) ELEVATION

SCALE: 3/16"=1'-0"

EXTERIOR COLOURS - TYPICAL ON ALL ELEVATIONS

ROOF	ASPHALT - DUAL BLACK-IKO	BATTENS	SMARTBOARD - SLATE GREY
WALLS	STUCCO #1 - N/A	SIDING	HARDIBOARD - SLATE GREY
	STUCCO #2 - N/A	WINDOWS	ALUMINUM - BLACK
FASCIA	ALUMINUM - BLACK	MANU. STONE	REAL BRICK - RED
SOFFIT	ALUMINUM - BLACK	FRONT DOOR	METAL CLAD - BLACK
RAINWARE	ALUMINUM - BLACK	RAILING	ALUMINUM - BLACK

SEVEN DESIGN LTD

ENGINEER STAMP

CONTRACTOR TO VERIFY ALL DIMENSIONS PRIOR TO START AND REPORT ERRORS TO DESIGNER FOR CORRECTION.

SPECIFICATION:	CUSTOM
MAIN AREA:	1015 SQ.FT.
SECOND AREA:	1087 SQ.FT.
DEV. BASEMENT:	740 SQ.FT.
TOTAL AREA:	2102 SQ.FT.
DRAWN BY:	MET
DATE:	OCT./26
SCALE:	3/16"=1'-0"
REVISED:	N/A
JOB NO.:	N/A

MODEL: CUSTOM SINGLE DETACHED DWELLING
CLIENT: PRIVATE RESIDENCE
LOT: 24 BLOCK: 9 PLAN: 5236 R
ADDRESS: 2207 8 AVENUE S.E.

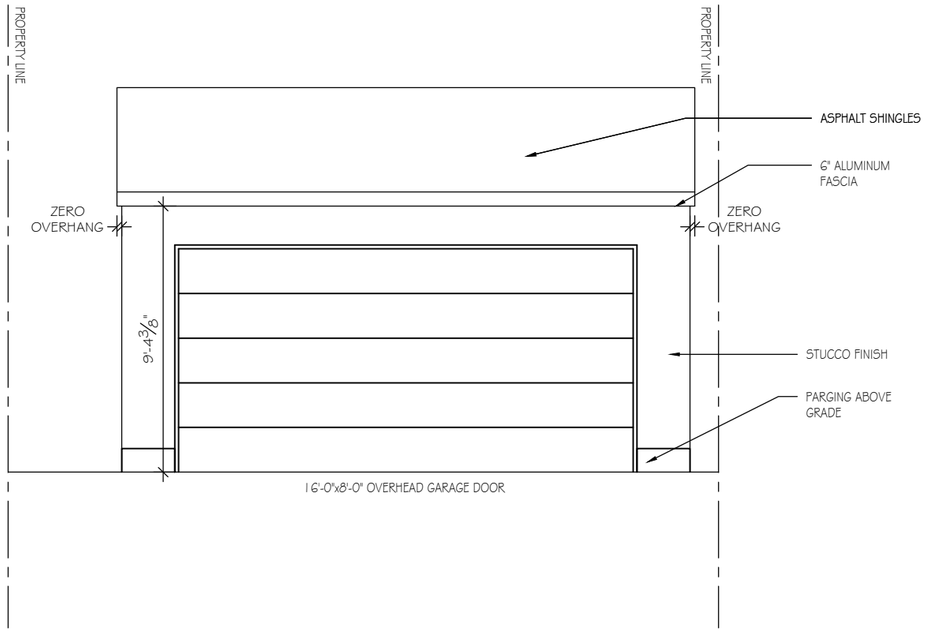

FRONT ELEVATION - SOUTH

SCALE: 3/16"=1'-0"

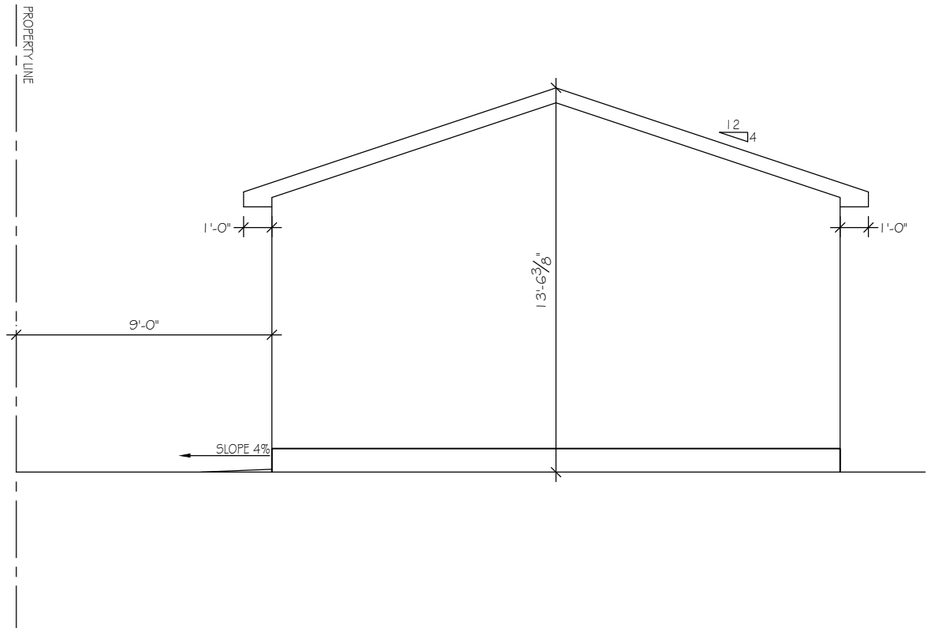

RIGHT ELEVATION - WEST

SCALE: 3/16"=1'-0"

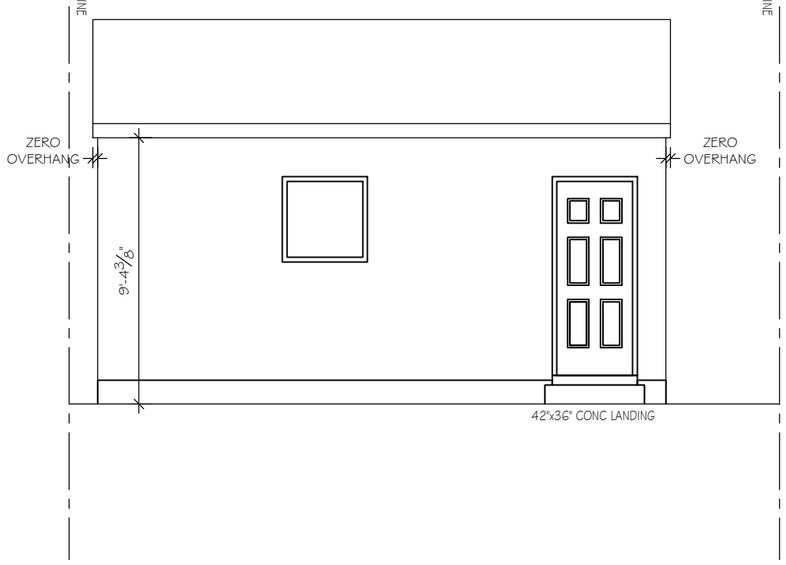

REAR ELEVATION - NORTH

SCALE: 3/16"=1'-0"

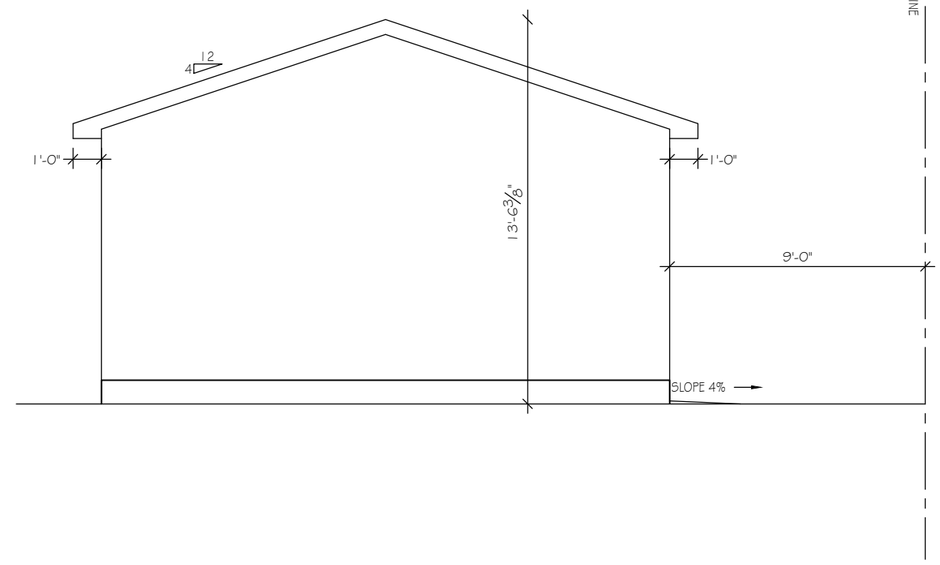

LEFT ELEVATION - EAST

SCALE: 3/16"=1'-0"

SEVEN DEZIGN LTD

ENGINEER STAMP

CONTRACTOR TO VERIFY ALL DIMENSIONS PRIOR TO START AND REPORT ERRORS TO DESIGNER FOR CORRECTION.

CUSTOM	
1015 SQ.FT.	MAIN AREA:
1087 SQ.FT.	SECOND AREA:
740 SQ.FT.	DEV. BASEMENT:
2102 SQ.FT.	TOTAL AREA:

SPECIFICATION:	
MAIN AREA:	1015 SQ.FT.
SECOND AREA:	1087 SQ.FT.
DEV. BASEMENT:	740 SQ.FT.
TOTAL AREA:	2102 SQ.FT.
DRAWN BY:	MET
DATE:	OCT./26
SCALE:	3/16"=1'-0"
REVISED:	N/A
JOB NO.:	N/A

MODEL: CUSTOM SINGLE DETACHED DWELLING

CLIENT: PRIVATE RESIDENCE

LOT: 24 BLOCK: 9 PLAN: 5236 R

ADDRESS: 2207 8 AVENUE S.E.

16 OF 16

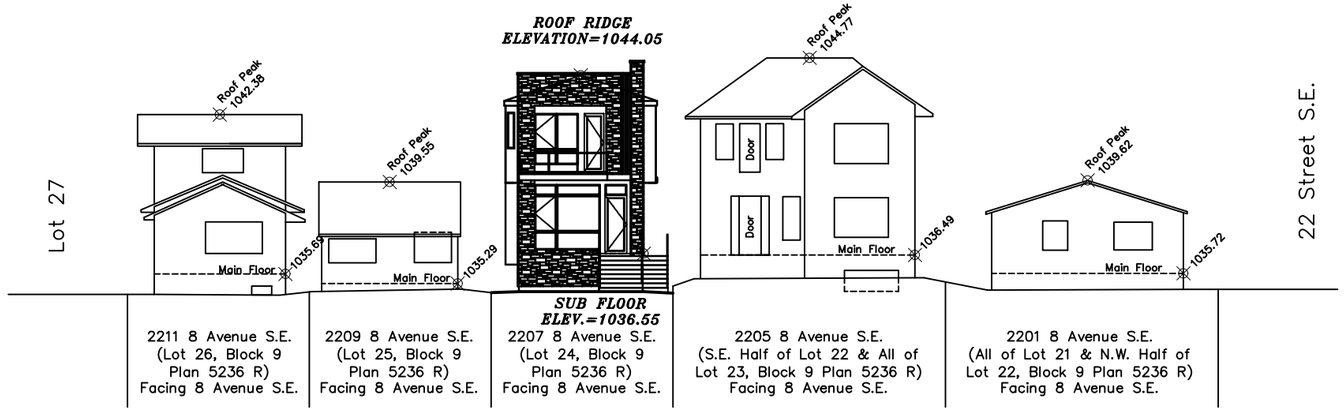

1 NORTH STREETSCAPE
SCALE: 1:250

SEVEN DESIGN LTD

ENGINEER STAMP

CONTRACTOR TO VERIFY ALL DIMENSIONS PRIOR TO START AND REPORT ERRORS TO DESIGNER FOR CORRECTION.

SPECIFICATION:	CUSTOM
MAIN AREA:	1015 SQ.FT.
UPPER AREA:	1087 SQ.FT.
DEV. BASEMENT:	740 SQ.FT.
TOTAL AREA:	2102 SQ.FT.

DRAWN BY:	MET
DATE:	OCT./26
SCALE:	AS SHOWN
REVISED:	N/A
JOB NO.:	N/A

MODEL: CUSTOM SINGLE DETACHED DWELLING
CLIENT: PRIVATE RESIDENCE
LOT: 24 BLOCK: 9 PLAN: 5236 R
ADDRESS: 2207 8 AVENUE S.E.

1 OF 3

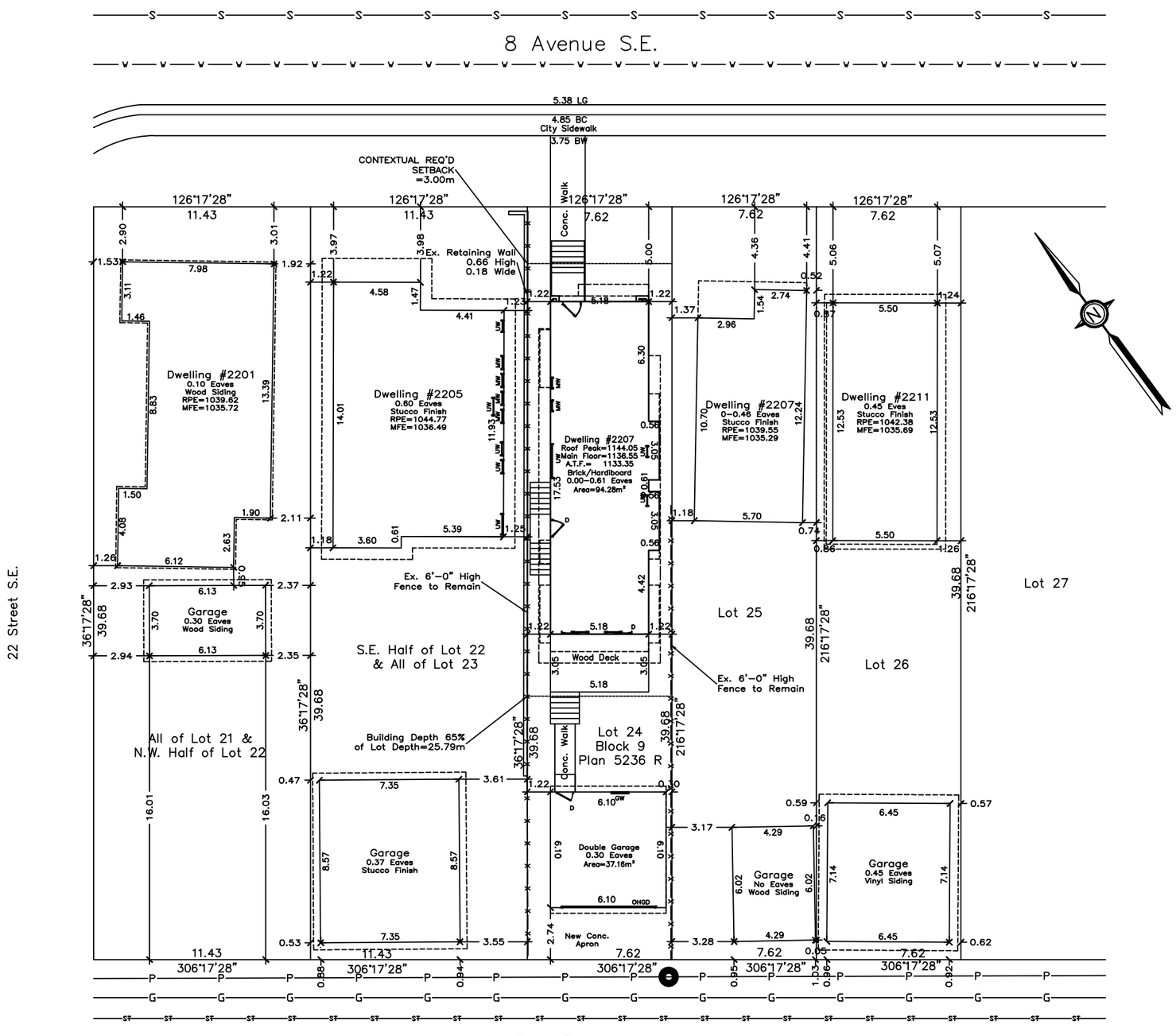

1 BLOCK PLAN
SCALE: 1:250

SEVEN DEZIGN LTD

ENGINEER STAMP

CONTRACTOR TO VERIFY ALL DIMENSIONS PRIOR TO START AND REPORT ERRORS TO DESIGNER FOR CORRECTION.

SPECIFICATION:	CUSTOM
MAIN AREA:	1015 SQ.FT.
UPPER AREA:	1087 SQ.FT.
DEV. BASEMENT:	740 SQ.FT.
TOTAL AREA:	2102 SQ.FT.

DRAWN BY: MET
DATE: OCT./26
SCALE: AS SHOWN
REVISED: N/A
JOB NO.: N/A

MODEL: CUSTOM SINGLE DETACHED DWELLING
CLIENT: PRIVATE RESIDENCE
LOT: 24 BLOCK: 9 PLAN: 5236 R
ADDRESS: 2207 8 AVENUE S.E.

2 OF 3

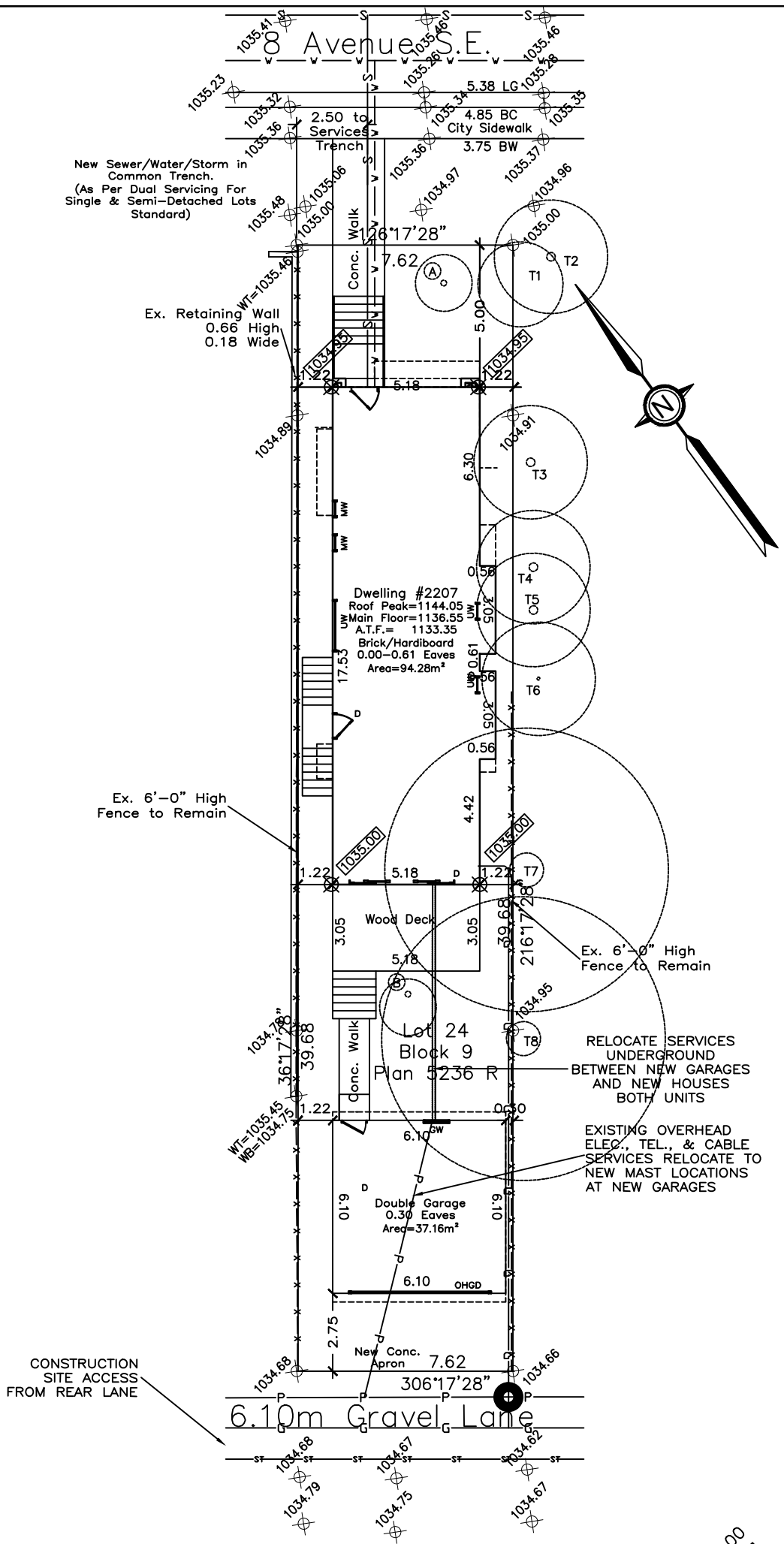

1 SITE PLAN
SCALE: 1:200

TREE SCHEDULE

Tree No.	Variety	Calliper (±)	Canopy (±)	Height (±)	Location	Disposition
A	Birch	0.10	1.20	3.00	In Subject Property	New
B	Crab Apple	0.10	1.20	3.00	In Subject Property	New
T1	Bush	–	3.00	1.50	On Property Line	To Remain
T2	Deciduous	0.30	4.00	12.00	In Adjacent Property	To Remain
T3	Deciduous	0.30	4.00	6.00	In Adjacent Property	To Remain
T4	Deciduous	0.30	4.00	6.00	In Adjacent Property	To Remain
T5	Deciduous	0.30	4.00	6.00	In Adjacent Property	To Remain
T6	Deciduous	0.10	4.00	6.00	In Adjacent Property	To Remain
T7	Deciduous	1.20	10.00	12.00	On Property Line	To Remain
T8	Deciduous	1.20	10.00	12.00	On Property Line	To Remain

MAX SITE COVERAGE ALLOWED = 302.36 sq.m.x45%
136.06 sq.m.

ACTUAL SITE COVERAGE =

DWELLING	96.64 sq.m.	(1014.78 sq.ft.)
PORCHES	0.00 sq.m.	(0.00 sq.ft.)
ARCH. BUILDOUTS	3.84 sq.m.	(41.33 sq.ft.)
GARAGE	37.16 sq.m.	(400.00 sq.ft.)
TOTAL	135.28 sq.m.	= 44.74%

PARKING REQUIRED 1 OFF STREET PARKING PER UNIT = 1 STALL TOTAL
PARKING PROVIDED 2 CAR GARAGE PER UNIT = 2 STALLS TOTAL

GROSS FLOOR AREA

DWELLING	MAIN FLOOR =	96.64 sq.m. (1014.78 sq.ft.)
	SECOND FLOOR =	101.99 sq.m. (1087.00 sq.ft.)
TOTAL:		198.63 sq.m. (2101.78 sq.ft.)

LEGEND

EX. ELEVATIONS ARE SHOWN THUS: ⊗ 1000.00 = 1000.00 METRES.(GEODETIC)
NEW ELEVATIONS ARE SHOWN THUS: ⊗ 1000.00 = 1000.00 METRES.
DISTANCES ARE IN METRES AND DECIMALS THEREOF.
ELEVATIONS ARE REFERRED TO GEODETIC DATUM
AND ARE DERIVED FROM ASCMS 228098 AND 8573
ASCM 228098 IS HELD FOR HORIZONTAL AND VERTICAL POSITIONING.
WINDOWS AND DOORS ARE DESCRIBED AS WIDTH x HEIGHT.
THE FOLLOWING ABBREVIATIONS MAY APPEAR ON THIS PLAN:

- × ----- denotes Calculation points
- ⊠ ----- denotes Water Valve
- ◆ ----- denotes Gas Valve
- ⊗ ----- denotes Manhole
- ⊙ ----- denotes Tree
- ● ----- denotes Power Pole
- △ ----- denotes Sign
- ☼ ----- denotes Light Stand
- —X—X— denotes Fence
- denotes Sanitary Line
- denotes Storm Line
- denotes Water Line
- denotes Gas Line
- denotes Electrical Line
- denotes Property Line

3 OF 3

MODEL: CUSTOM SINGLE DETACHED DWELLING
CLIENT: PRIVATE RESIDENCE
LOT: 24 BLOCK: 9 PLAN: 5236 R
ADDRESS: 2207 8 AVENUE S.E.

DRAWN BY:	MET
DATE:	OCT./26
SCALE:	AS SHOWN
REVISED:	N/A
JOB NO.:	N/A

SPECIFICATION:	CUSTOM
MAIN AREA:	1015 SQ.FT.
UPPER AREA:	1087 SQ.FT.
DEV. BASEMENT:	740 SQ.FT.
TOTAL AREA:	2102 SQ.FT.

CONTRACTOR TO VERIFY ALL DIMENSIONS PRIOR TO START AND REPORT ERRORS TO DESIGNER FOR CORRECTION.

ENGINEER STAMP

SEVEN DEZIGN LTD